INDICATE
WESTON
Instruments
SINCE 1888
RECORD
CONTROL

RALPH C. STAUB

DAYSTROM-WESTON SALES DIVISION
DAYSTROM, INCORPORATED

7613 READING ROAD
CINCINNATI 37, OHIO
VALLEY 1-9105

ENGINEERING ASSOCIATES
DAYTON, OHIO

RECEIVED
ENGINEERING ASSOCIATES
DAYTON, OHIO
MAR 29 1960 PM

RALPH C. STAUB

DAYSTROM-WESTON SALES DIVISION
DAYSTROM, INCORPORATED

7613 READING ROAD
CINCINNATI 37, OHIO
VALLEY 1-9105

ENGINEERING
DAYTON, OHIO

CIRCULAR 02-100-A
APRIL 1959

WESTON
SENSITIVE RELAYS

(Instrument Type)

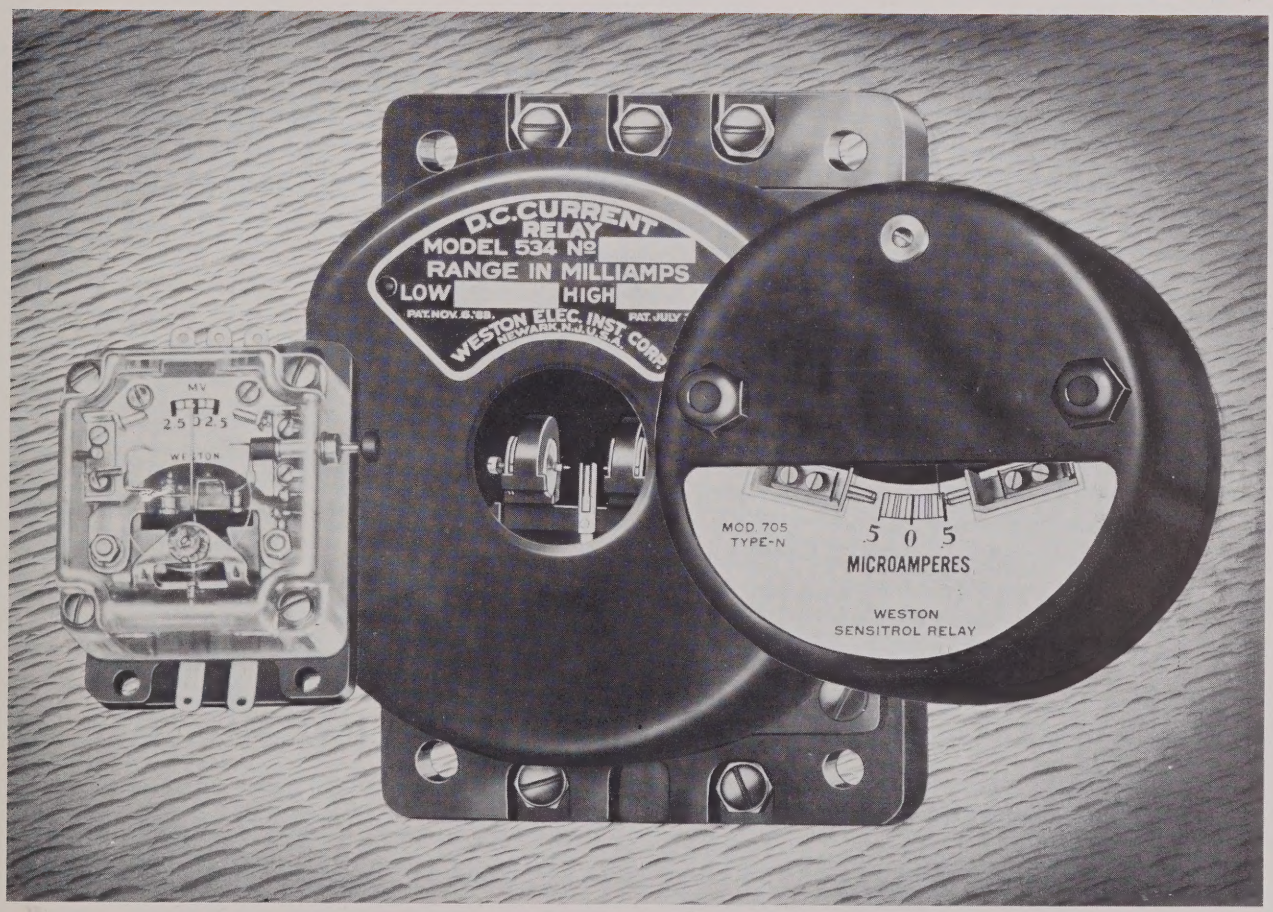

WESTON INSTRUMENTS, DIVISION OF DAYSTROM, INCORPORATED

Newark 12, New Jersey, U. S. A.

RELAYS by WESTON

For many years Weston Relays have met exacting requirements in a wide variety of applications. They have been consistently dependable as contact-making devices in sensitive alarm systems, telephone circuits and similar installations. Improved design and manufacture in recent years have served to broaden the fields of use for Weston Relays. Today far more sensitive relays are offered with greater assurance of dependable operation.

*Design engineers are urged to study the characteristics of the relays described in this bulletin, particularly the Model 705 and Model 813 *SENSITROL relays. In some instances replacement of elaborate vacuum tube circuits with a small, rugged Weston relay will effect a great saving in space, and may eliminate the necessity for stand-by power.*

Services of Weston relay engineers are offered without obligation. Submission of a circuit diagram showing all limiting values of resistance, current, voltage, etc. will aid in the solution of a relay problem.

*SENSITROL—A registered trademark designating the magnetic contact instruments and relays manufactured exclusively by Weston Instruments, Division of Daystrom, Inc.

HOW TO ORDER WESTON RELAYS

Give this information:

1. Model Number and Type Number.
2. High or low contact adjustment (or both) in current or voltage. If single contact, state whether contact is to be made on increasing or on decreasing values.
3. Case (flush or surface).
4. Mounting position (vertical, 45° or horizontal).
5. Resistance—if it is important.
6. If solenoid reset is required, state reset coil voltage.
7. When ordering a thermocouple actuated temperature relay, state range in °F or °C, cold end temperature, material and resistance of the thermocouple and leads to be used with the relay.
8. If same relay has been purchased previously, refer to previous order, or mark order "repeat", giving if possible some reference such as previous order number, relay serial number, date, etc.

In order to assure the best possible operation of a sensitive relay for any particular application, it is absolutely necessary that we be informed of the limiting conditions under which the relay is to be used. For example:

- What will be the values of voltage and current in the local circuit?
- Is the local circuit inductive or non-inductive?
- What are the values of resistance inductance or capacitance, as known?
- Is any special accuracy required?
- Where a special application is involved, it is of great assistance to have a circuit diagram showing where the relay is to be used. If auxiliary apparatus is employed, a complete description of it is very helpful.

Ordering Form 1725 will assist in tabulating essential ordering information.

Miniature Relays—Model 813

The miniature Model 813, modern and compact, provides many advantages of other relays with added versatility and ruggedness. Its small size, relatively light weight and tested sturdiness make Model 813 adaptable for airborne, marine and portable uses as well as switchboard applications. Model 813 is supplied either as a *SENSITROL relay or as a sensitive non-magnetic contact relay.

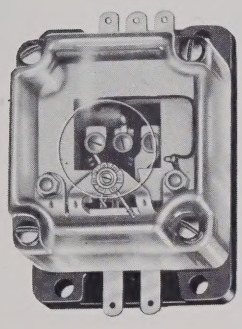

SENSITIVE TYPE
Non-Magnetic Contacts

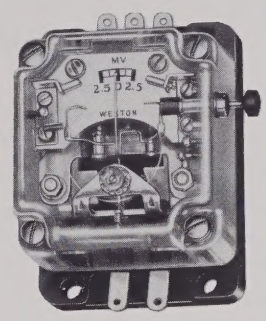

*SENSITROL TYPE
Double Contacts, with Push Button

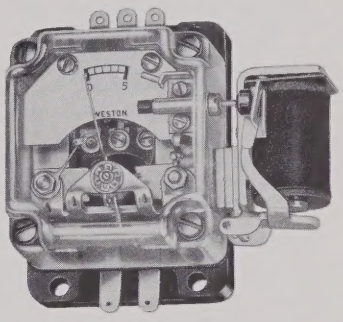

*SENSITROL TYPE
Single Contact, with Solenoid

(Illustrations approximately 2/3 actual size)

Sensitive Relay

Model 813 Sensitive Relay, with a 1000 ohm moving coil, operates on as little as 50-0-50 microamperes or 50-0-50 millivolts. Its contacts can handle the Weston Model 712 Type 4 Small Power Relay or any equivalent load of approximately 35 milliamperes at 6 volts d-c, non-inductive. The wire-type contacts, with rare metal surfaces, are non-magnetic and are self-resetting. This relay is not intended for precise alarm or control applications, but is ideal as a triggering control or alarm—that is, where the moving coil current changes suddenly so that the contacts close with an impact. This type is not supplied with a calibrated scale and not usually recommended for a-c operation.

*SENSITROL Relay

Model 813 *SENSITROL relay with a 1000 ohm moving coil provides ranges as low as 0-5 MICROAMPERES (0-5 MILLIVOLTS) or 2-0-2 MICROAMPERES (2-0-2 MILLIVOLTS) zero center, yet its contact capacity is 50 milliamperes at 120 volts either a-c or d-c. A magnetic "rider" on the pointer is the moving contact. It is supplied with a permanently magnetized contact at one end of the indicating scale, or with two stationary magnetic contacts, one on each end of the scale. The contacts are reset either manually by a push button or by a solenoid mounted on the side of the case. The standard solenoid is intended for intermittent energization, and is available for 6, 12, or 24 volts d-c or 120 volts 60 cycles.

Accuracy in general is within 10% of the range.

Model 813 relays are designed for use where space is limited. Basic dimensions are only 1.55" x 2.16" with 1.34" projection from the panel. They weigh 3.5 oz., (0.099 kgs) or with a solenoid reset, 5 oz., (0.14 kg).

Relay base is bakelite and the case is transparent plastic. Model 813 relays are for surface mounting and are front connected by means of solder type terminals. *Unless otherwise specified, relays will be adjusted for vertical mounting.*

Model 813 Sensitive Relay (Non-Magnetic contacts)

Model 813 *SENSITROL Relay Types:

Single magnetic contact, Manual Push Button
Single magnetic contact, with Solenoid Reset
Double magnetic contacts, Manual Push Button
Double magnetic contacts, with Solenoid Reset

Correspondence is necessary if external resistors or shunts are required to extend the current or voltage ranges. Model 813 relays can be supplied with a zero corrector at a surcharge.

If a-c operation is desired, external rectifiers can be supplied for use with the *SENSITROL relay. Solenoid voltages, other than standard, are available at a surcharge.

COMPOSITE DIMENSIONAL DIAGRAM

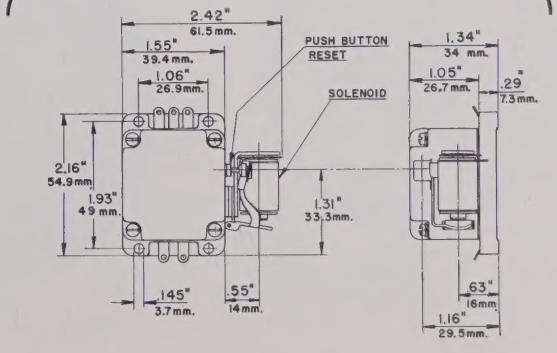

*SENSITROL Relays—Model 705

TYPE 1
Single Fixed Contact

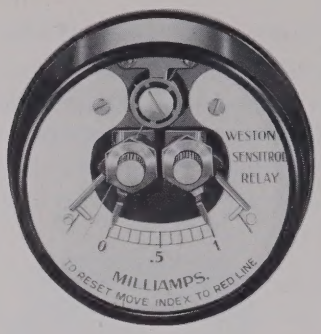

TYPE 3
Double Adjustable Contacts

TYPE 3-S
Double Adjustable Contacts with Separate Contact Adjusting and Reset Controls

(Illustrations approximately ½ actual size)

Model 705 *SENSITROL relays are highly sensitive to the most minute changes in current or voltage. At the same time they have remarkably high contact capacity. These were the first relays of the *SENSITROL type made available commercially. They are ideal for countless applications requiring reliable electrical response to initiate alarms or to achieve ultra-sensitive control.

Model 705 relays are made in numerous ranges and contact adjustments. They can be supplied with many variations in response speed, coil resistance and zero suppression to fit special requirements such as: operation on a-c or d-c voltage or current, for use with photocells or tachometer generators, in conjunction with thermocouples or resistance bulbs as temperature relays or for operation with other devices producing an electrical output. Correspondence is invited on specific applications.

Positive operation can be obtained on values as low as 1-0-1 MICROAMPERE (2-0-2 MV) with a 2000 ohm moving coil. Where even greater sensitivity is required, Type N (slightly larger than other Model 705 relays), is available with ranges as low as ½-0-½ MICROAMPERE (1-0-1 MV). The contacts can be set as low as ¼-0-¼ MICROAMPERE.

Model 705 relays can be supplied as zero centered or suppressed zero instruments. Zero can be suppressed four or more scale lengths depending on the type, the limit being about 200 mechanical degrees. Single contact types are supplied to operate on either increasing or decreasing values (when ordering, state which).

Contact capacity of Types 1, 2 and 3 is 50 MA at 120 volts a-c or d-c. Types 4, 5, 6 and N — which use *TWINTACTS (pairs of adjacent parallel contacts) — are rated at 100 MA. Sharp, non-chattering contact closure occurs at either fixed or adjustable values as a result of attraction between the magnetic moving contact and the magnetized stationary contact. They are reset either manually or by a solenoid built into the base of the relay. The solenoid permits automatic resetting when a continuous sampling of circuit condition is required. Types 4, 5, 6 and N are supplied with either 6 volt d-c or 120 volt a-c solenoid as standard but 6 volt d-c should be used when a solenoid is to be continuously energized. Special voltage solenoids available at a surcharge.

A calibrated scale eliminates the need for a separate indicating instrument. The scale can be calibrated in units appropriate to the application, such as temperature, revolutions per minute, foot-candles, etc.

MODEL 705 SENSITROL RELAYS ARE AVAILABLE IN EITHER SURFACE METAL OR FLUSH BAKELITE CASES except Type N which is supplied in surface metal case only. NOTE: When not specified, surface metal cases are supplied. Relays are adjusted for vertical mounting unless otherwise specified.

Accuracy in general is 5% of the range in Types 1, 2 and 3, and 10% in Types 4, 5, 6 and N; however under certain operating conditions a much closer control of the operating point is possible. Repeatability of better than 1% is common.

TYPE 5
Single Fixed Contact with Solenoid Reset and Adjustable Index

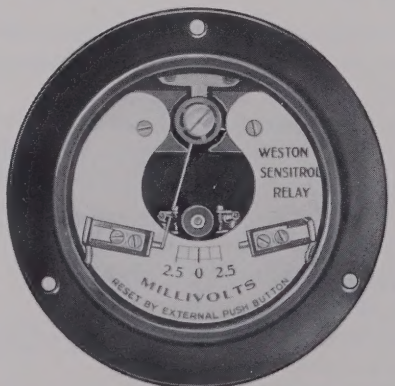

TYPE 6—*Flush* Case
Double Fixed Contact with Solenoid Reset

TYPE N
Double Contact with Solenoid Reset

*SENSITROL, *TWINTACTS—Registered trademarks.

DESCRIPTION OF TYPES

Type 1—Single Fixed Contact with Manual Reset. Stationary contact remains in fixed position on left side of scale. Supplied to make contact on either increasing or decreasing values (state which). Reset manually by a knob on the front or a lever on the back. Scale length approximately 30° or .6 inch. Minimum current for full scale deflection is 6 microamperes.

Type 2—Single Adjustable Contact with Manual Reset. Stationary contact can be adjusted over half of scale by means of knob on front which is also the reset control. Supplied to make contact on either increasing or decreasing values, (state which). Provided with a movable index to show the operating point. Scale length approximately 50° or 1 inch. Minimum current for full scale deflection 10 microamperes.

Type 2S—Same as Type 2 except with separate contact adjusting and reset controls. This relay may be reset without disturbing the operating point of the relay.

Type 3—Double Adjustable Contacts with Manual Reset. Has two adjustable stationary contacts, one for high and one for low values. Provided with two indexes for indicating high and low operating points. Contacts adjusted and reset by knobs on front. Closest that contacts can be set together is 30% of scale length. Scale length approximately 50° or 1 inch. Minimum current for full scale deflection is 10 microamperes.

Type 3S—Same as Type 3 except with separate contact adjusting and reset controls. This relay may be reset without disturbing either high or low operating point.

Type 4—Single Contact with Solenoid Reset. Uses Twintacts. Supplied to make contact on either increasing or decreasing values (state which). Scale length approximately 20° or .4 inch. Minimum current for full scale deflection is 3 microamperes.

Type 5—Single Contact with Solenoid Reset and Adjustable Operating Point. Similar to Type 4 but contact making value is adjustable over the full scale by means of an adjustable index which shifts the control spring similar to the action of a zero corrector. Because of this type of adjustment, the pointer is not necessarily a direct indication of the coil current. Has two scales, a red one for setting the index to the value at which contact is to be made, and a black scale which indicates the change in coil current or voltage necessary to achieve the contact making value. The stationary contact is always on the left side of the scale, but can be supplied to make contact on either increasing or decreasing values (state which). Scale length approximately 20° or .4 inch. Minimum current for full scale deflection is 3 microamperes.

Type 6—Double Contact with Solenoid Reset. Uses Twintacts. Makes contact on both increasing and decreasing values. Scale length 15° or .3 inch. Minimum current for full scale deflection is 2 microamperes.

Type N—Double Contact with Solenoid Reset. Has Twintacts at each end of scale for increasing and decreasing values. Designed for applications calling for maximum sensitivity. Slightly larger than other Model 705 Relays, Type N is supplied in surface metal case only. Scale length 15° or .3 inch. Minimum current for full scale deflection is 1 microampere. (Stock range ½-0-½ microampere with 2000 ohms resistance.)

NOTE: Model 705 Solenoids are mounted permanently on back of relay, extending about 2″ and are available for 6 volts d-c or 120 volts 60 cycle a-c service, but can be supplied for other d-c or a-c service at a surcharge.

When ordering Model 705 Relays, use type numbers printed above and specify whether contacts are to close on increasing or decreasing values or both.

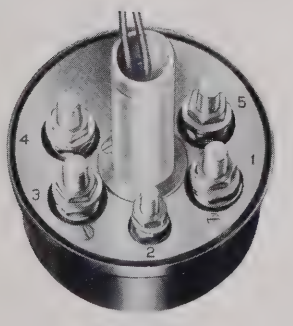

Typical Rear View
Model 705—Surface Case
Showing Solenoid Reset

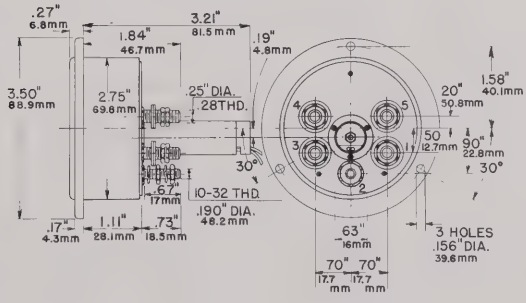

TYPE 6—*Flush Case*
Weight: 0.7 lb. (0.32 kg.) exclusive of 1.602 (0.045 kg.) solenoid.

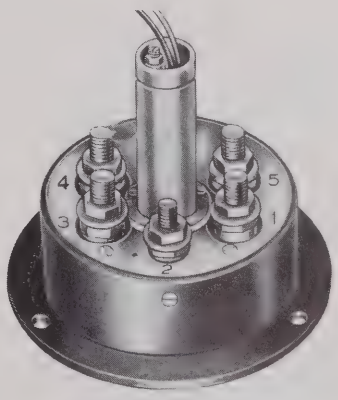

Typical Rear View
Model 705—Flush Case
Showing Solenoid Reset

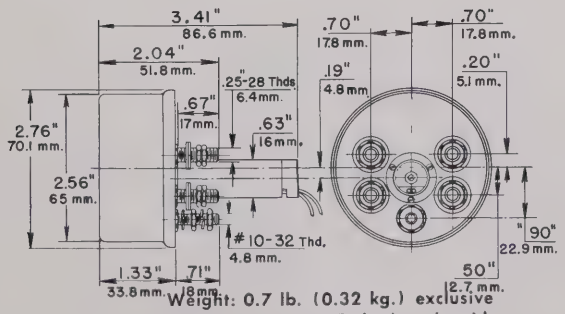

Weight: 0.7 lb. (0.32 kg.) exclusive of 1.6 oz. (0.045 kg.) solenoid.

Type 6—Surface Case

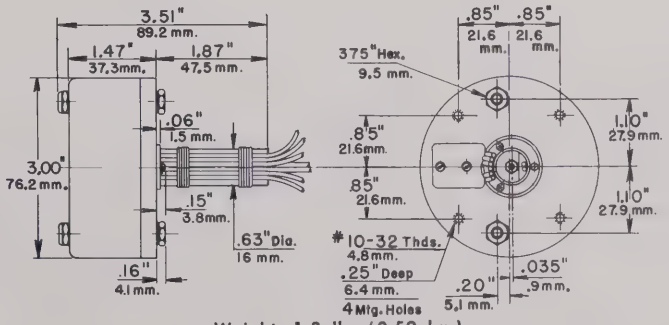

Weight: 1.3 lb. (0.59 kg.).

Type N

Consult your Weston Representative for information on basic ranges available from stock.

Sensitive Relay—Model 534

Model 534 is Weston's finest sensitive non-magnetic contact relay. Widely used for many years, it has been improved to provide contact action on as little as 7.5 microamperes. Contact capacity may be 200 milliamperes at 6 volts d-c non-inductive, except for relays closing their contacts at 100 microamperes or less, in which the contact load should not exceed 50 milliamperes. Spring-like rare metal contacts on the movable contact arm provide a wiping or self-cleaning action, and open or close without need for resetting mechanism. Under favorable conditions accuracy within ±1% can be obtained.

Model 534 is available as either a voltage or a current relay. Suitable for portable use or switchboard mounting, it can also be supplied for mobile applications. It is normally surface mounted and front connected. Five connection screws are provided—two for the moving coil circuit, one for the movable contact arm and one each for the two fixed contacts. *Unless otherwise specified relays will be adjusted for vertical switchboard mounting.*

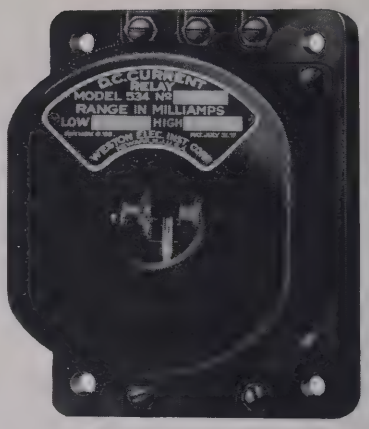

Model 534—Surface Type

SUPPRESSED ZERO TYPE: High and low contacts are factory adjusted at specified current or voltage values of the same polarity. The minimum contact setting or the minimum difference between high and low contact settings is 7.5 microamperes. When used in controls to hold current or voltage to a desired value, the difference between high and low settings can be as little as 1% of the nominal value except for the more sensitive microampere ranges.

ZERO CENTER TYPE: Right and left fixed contacts are factory adjusted at the desired values of positive and negative polarity with the moving contact between the two for zero current or voltage, moving from zero only when the relay is energized. Minimum contact settings are 7.5-0-7.5 microamperes.

RANGES

Model 534 can be supplied self-contained with ranges as low as 7.5 microamperes or intermediate ranges up to 1 ampere. Higher ranges can be obtained through the use of appropriate external shunts. Correspondence is invited.

Ranges of 50 volts or less are available in self-contained units. For ranges above 50 volts, external resistors may be required. Correspondence is invited.

A flush metal case, which provides magnetic shielding, can be supplied on special order at a surcharge (not recommended if maximum sensitivity is desired). The flush type can also be supplied with a scale at a surcharge.

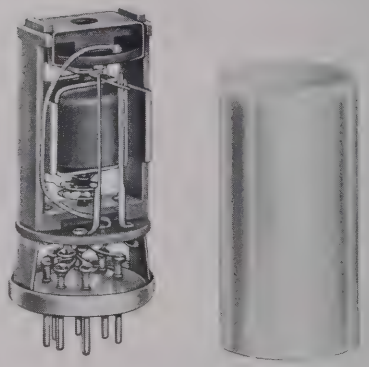

Model 1081—Cover Removed

Sensitive Miniature Hermetically Sealed Relay—Model 1081

Model 1081 is ideally suited for applications where weight and small size are important or where external electromagnetic effects must be held to a minimum. Housed in a brass, tinned finished case, it can be supplied for miniature 7 pin socket operation or with curved terminals for solder connection. For maximum shielding Mu-metal cases can be supplied.

Ranges and contact adjustments are made to order. Sensitivities as high as 50-0-50 microamperes at a coil resistance of approximately 2300 ohms are available. Non-magnetic contacts carry 35 milliamperes at 6 volts d-c non-inductive at high sensitivity, while loads up to 0.5 amperes at 28 volts d-c non-inductive can be handled depending upon the moving coil sensitivity and number of operations. High and low contacts can be arranged for zero center, single pole, double throw operation or suppressed zero with one contact normally closed.

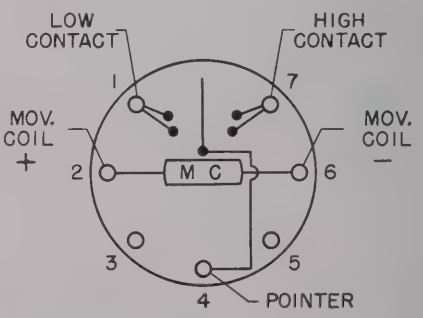

VIEW FROM TOP

Model 1081— Connection Diagram

DIMENSIONAL DIAGRAMS

Model 534—Surface Type

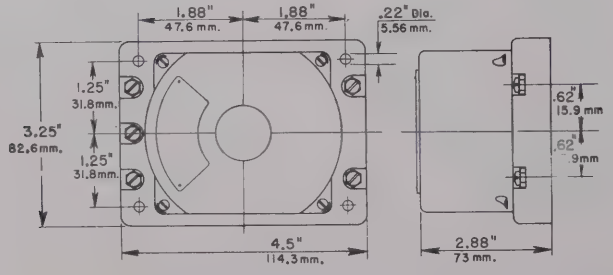

Approx. Wt.: 2 lbs. (0.9 kg).

Model 1081

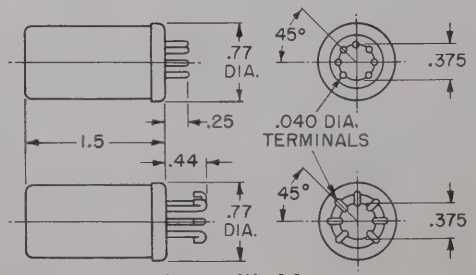

Approx. Wt. 1.1 oz.

Sensitive Alarm Relay—Model 730

Model 730 is a sensitive indicating relay which eliminates the need for a separate milliammeter in the circuit. Designed for operation when normally flowing current either increases or decreases beyond a pre-determined value, it is generally used in closed alarm systems, as in banks, fire and police alarm circuits.

The front cover can be removed from the flush type case for adjustment of contacts or zero correction without dismounting the relay from the panel. Surface type case is also available. Platinum-iridium contacts, rated at approximately 35 milliamperes, 6 volt d-c non-inductive, are used. Coil resistance is approximately 100 ohms. Contact circuit is insulated from the coil circuit. Available in flush or surface type with a range of 0-4 milliamperes.

Range listed is for alarm purposes with contacts set at 1 and 3 milliamperes. This conforms with existing closed circuit practice where the pointer normally rests at approximately 2 milliamperes. Other ranges available on special order.

MODEL 730
Flush Bank Alarm Type

Small Power Relay—Model 712

A small auxiliary relay to operate from the contacts of Weston sensitive and *SENSITROL relays, Model 712 includes special electrical and mechanical features essential for long life and for reliable operation with sensitive relay contacts. The design of its silver contacts provides a wiping action on their surface. The contacts will handle 5 amperes at 120 volts a-c, non-inductive or 2 amperes at 120 volts d-c. Front and back contacts are arranged in a double pole double throw combination so that as Model 712 operates each of two circuits is transferred from normally closed contacts to normally open contacts.

Type 4 Relay requires approximately 35 milliamperes at 6 volts d-c for operation. It will operate on 6 volts d-c from the contacts of any Weston Sensitive or *SENSITROL relay. Type 110 A-C Relay operates on 120 volts, 60 cycles a-c. Designed for use with Weston *SENSITROL relays, it may be used wherever a dependable a-c power relay of this type is required. Energy consumption is less than 4 watts at 120 volts, 60 cycles, a-c.

Type 2 Relay operates on 35 milliamperes at 6 volts d-c, but has only one set of contacts arranged for single-pole double-throw operation.

Type 110 A-C should not be used with Models 534, 634, 730, 813 (Sensitive non-magnetic contact type) or other relays having similar contact capacity.

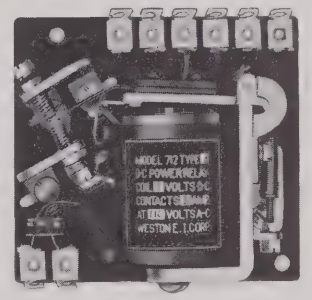

MODEL 712
Small Power Relay

Rectiformer—Model 9980

Model 9980 Rectiformer, a practical and convenient 6 volt d-c source for operating Weston Power Relays in conjunction with Weston Sensitive Relays, can be connected to any 105-130 volt, 50-60 cycle line. Auxiliary devices which do not need filtered current and which require low voltage, such as power and sensitive relays, annunciators, bell and light systems, can be operated with the Rectiformer. It eliminates need for dry cells and storage batteries.

This unit consists of a sturdily constructed transformer and dry disc rectifier on a bakelite base drilled for panel mounting. Output is 6 volts d-c, 125 milliamperes continuous or 200 intermittent.

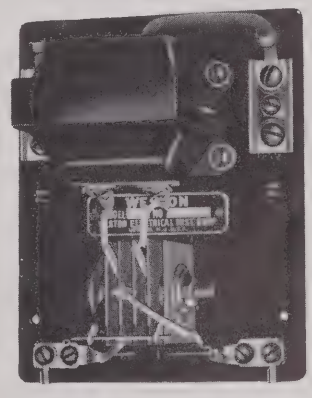

MODEL 9980
Rectiformer

DIMENSIONAL DIAGRAMS

Model 730 Flush Type

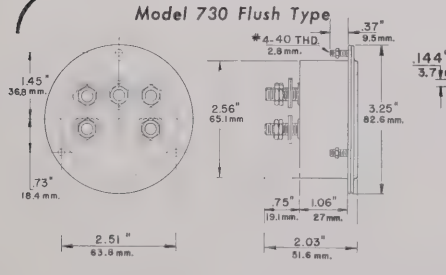

Wt.: 0.85 lb. (0.385 kg.)

Surface Type: Dim.: 2.75" diameter, 1.25" projection from panel. Wt.: 0.8 lb. (0.36 kg.)

Model 712

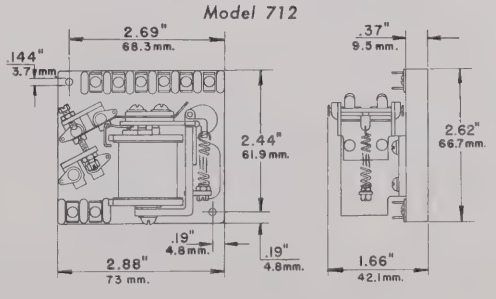

Wt.: 0.6 lb. (0.27 kg.)

Model 9980

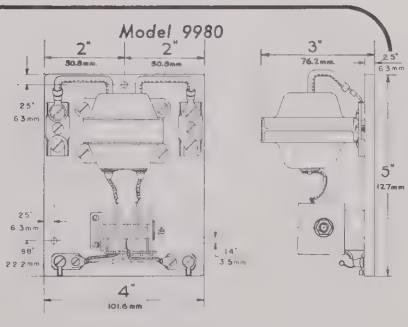

Wt.: 1.2 lb. (0.5 kg.)

SUGGESTED WESTON RELAY CONTROL CIRCUITS

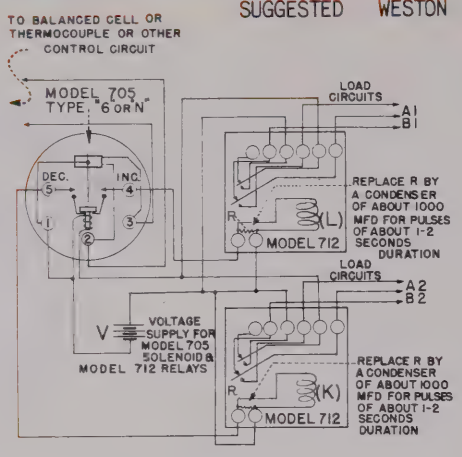
TO BALANCED CELL OR THERMOCOUPLE OR OTHER CONTROL CIRCUIT
MODEL 705 TYPE "6 OR N"
DEC.
INC.
LOAD CIRCUITS
A1
B1
REPLACE R BY A CONDENSER OF ABOUT 1000 MFD FOR PULSES OF ABOUT 1-2 SECONDS DURATION
(L)
MODEL 712
LOAD CIRCUITS
A2
B2
VOLTAGE SUPPLY FOR MODEL 705 SOLENOID & MODEL 712 RELAYS
REPLACE R BY A CONDENSER OF ABOUT 1000 MFD FOR PULSES OF ABOUT 1-2 SECONDS DURATION
(K)
MODEL 712

Continuous Pulsing Control

Between High and Low Limits

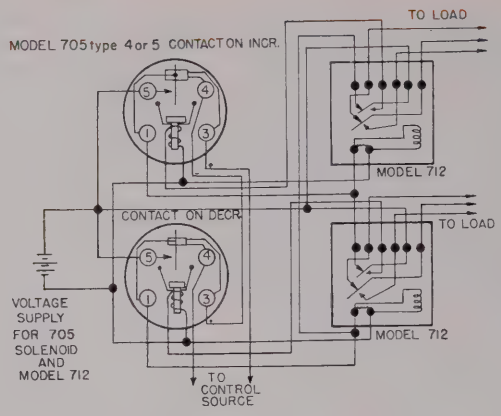

Automatic On-Off Control

Between High and Low Values.

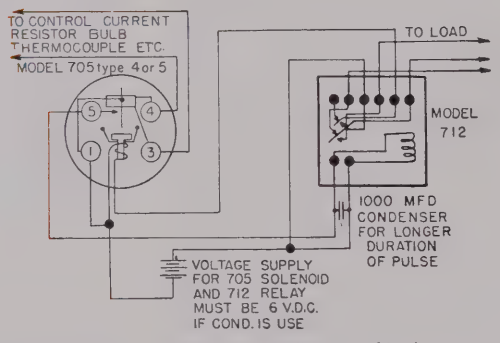
TO CONTROL CURRENT RESISTOR BULB THERMOCOUPLE ETC.
MODEL 705 type 4 or 5
TO LOAD
MODEL 712
1000 MFD CONDENSER FOR LONGER DURATION OF PULSE
VOLTAGE SUPPLY FOR 705 SOLENOID AND 712 RELAY MUST BE 6 V.D.C. IF COND. IS USE

Pulsing-type Circuit Using a Single

Magnetic Contact Relay

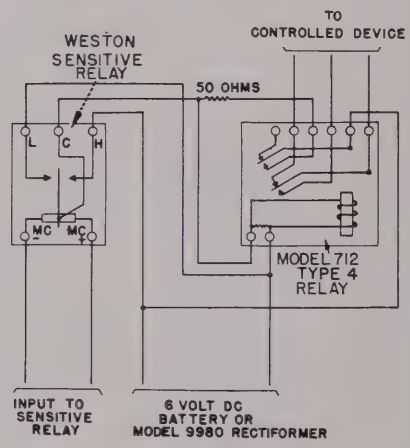

Lock-in Circuit

WESTON DISTRICT OFFICES

ALBANY—5 Herbert Drive, Latham, N. Y. ..... STate 5-5161
BOSTON—66 Central St., Wellesley 81, Mass. ..... CEdar 5-4300
BUFFALO 26—4446 Main St. ..... CIrcle 3355
CHICAGO 6—Room 1222, 205 W. Wacker Dr. ..... FRanklin 2-4656
CINCINNATI 37—7613 Reading Road ..... VAlley 1-9105
CLEVELAND 28—3951 Lee Road ..... SKyline 2-3030
DAYTON 2—11 W. Monument Avenue ..... BAldwin 2-8164
DETROIT 21—16607 James Couzens Highway ..... DIamond 1-2121
HARRISBURG—1511 North Front St. ..... CEdar 8-4276
HOUSTON 27—3405 Mercer ..... JAckson 6-4115
KNOXVILLE 21, TENN.—2917 Sanderson Rd. ..... KNoxville 5-5632
LOS ANGELES 7—2001 South Grand Ave. ..... RIchmond 9-2361
MILWAUKEE 3—617 No 2nd St., Room 904 ..... BRoadway 2-1538
NEWARK—Route 22 and Caldwell Ave., Union, N. J. ..... MUrdock 8-2020
NEW YORK 7—Room 1775, 50 Church St. ..... WOrth 4-3510
PHILADELPHIA 4—101 N. 33rd St. ..... BAring 2-6458—6443—6444
ROCHESTER 4, N. Y.—207 Burke Building
5 Saint Paul St.—BAker 5-9546
SAN DIEGO—4455 Miramar Rd., La Jolla, Calif. ..... GLencourt 4-0421
SAN FRANCISCO 3—147 10th St. ..... UNderhill 3-4250
SYRACUSE—4308 E. Genesee St., DeWitt 14, N. Y. ..... GIbson 6-4330
WASHINGTON 4, D. C.—429 Pennsylvania Building
425 13th Street, N. W. ..... DIstrict 7-3636

WESTON REPRESENTATIVES

AMARILLO—Butler and Land ..... 1505 W. Tenth St.—DRake 6-5255
ATLANTA 18—E. A. Thornwell, Inc.
1537 Howell Mill Road, N. W.—TRinity 5-7895
BALTIMORE—Thomas H. Closs
21 W. Pennsylvania Ave., Towson 4, Md.—VAlley 5-4445
CHARLOTTE 2, N. C.—Ranson, Wallace & Company
116½ E. 4th St.—EDison 4-4244
DALLAS 5—Butler and Land ..... 5538 Dyer St.—EMerson 1-6631
DENVER 16—Peterson Company, Inc.
4949 Colorado Blvd.—DExter 3-5434
JACKSON—Curtis H. Stout, Inc. ..... 706 Electric Bldg.—JAckson 4-4326
JACKSONVILLE—Ward Engineering Co., Inc.
2727 Phyllis St.—EVergreen 8-7656
KANSAS CITY—C. B. Fall Co.
11410 Richmond Ave., Hickman Mills 34, Mo.—SOuth 1-6545
LITTLE ROCK, ARK.—Curtis H. Stout, Inc.
400 Shall St., P. O. Box 107—FRanklin 4-8201
MEMPHIS—Curtis H. Stout, Inc. ..... 718 M & M Bldg.—JAckson 6-7601
MIDDLETOWN, CONN.—Dittman & Greer, Inc.
33 Pleasant St.—DIamond 6-9606
MINNEAPOLIS 3—Pinkney & Hine ..... 1925 Nicollet Ave.—FEderal 8-0523
NEW ORLEANS 12—W. J. Keller ..... 415 Natchez St.—MAgnolia 3603-4
ORLANDO—Ward Engineering Co., Inc.
1015 W. Central Ave.—GArden 2-4295, 3-9721
PHOENIX—J. E. Redmond Supply Co.
625 W. Madison St., P. O. Drawer 869—ALpine 4-8471
PITTSBURGH 22—Russell F. Clark Co.
1409 Clark Bldg.—ATlantic 1-8089, 1-8090
RICHMOND 26, VA.—Ranson, Wallace & Co.
P. O. Box 8762, West Hampton Station—ATlantic 8-8758
SEATTLE 99—Eicher & Co.
5 West Harrison St., P. O. Box 9054—ATwater 4-1811
SHREVEPORT—Curtis H. Stout, Inc.
334 Ricou-Brewster Bldg.—SHreveport 5-5485
ST. LOUIS 1—C. B. Fall Co. 317 N. 11th St., Suite 1001—CHestnut 1-2433
TULSA 1, OKLA.—Riddle and Hubbell Company
302 S. Cheyenne Ave., P. O. Box 727—LUther 5-5624

Canada

MONTREAL 9, P.Q.—Daystrom, Ltd. ..... 5430 Ferrier St.—RIverside 8-8471
TORONTO 10, ONT.—Daystrom, Ltd. ..... 840 Caledonia Rd.—RUssell 7-1114

Export and Overseas

DAYSTROM INTERNATIONAL ..... 100 Empire St., Newark 12, N. J. ..... BIgelow 8-2141

WESTON INSTRUMENTS, DIVISION OF DAYSTROM, INCORPORATED, NEWARK 12, N. J., U.S.A.

Printed in U. S. A.

WESTON

PRICE LIST 02-100

EFFECTIVE NOVEMBER 9, 1959

Relays

All Prices Subject to Change Without Notice and are F.O.B. Factory, Newark 12, N. J.

SUPERSEDES 9/15/58

Model 534—Sensitive Relay

(Select price for "suppressed zero" type on basis of lowest value to close contact or difference between high and low contact setting, whichever is less.—Price for "zero center" type selected on lowest value to close contact.)

7.5 microamperes or any value up to 15 microamperes	$122.75
16 microamperes or any value up to 50 microamperes	115.25
51 microamperes or any value up to 1 ampere (self-contained)	108.75
1 ampere or any value as high as 30 amperes (supplied with external appropriate shunts. Correspondence invited.) (Higher ranges available through the use of a 100 MV shunt and 5 ft. shunt leads)	121.00
50 volts or less (self-contained)	112.25

(External resistors may be required for ranges above 50 volts.)

Flush metal case which provides magnetic shielding can be supplied on special order at a surcharge of $7.50 (not recommended if maximum sensitivity is desired).

Model 705—SENSITROL® Relays

Direct Current Relays

Ranges	Type 1	Type 2	Type 2-S	Type 3	Type 3-S	Type 4*	Type 5*	Type 6*
0-5 microamperes or any value up to 50 milliamperes	$107.50	$110.00	$117.50	$112.50	$125.00	$113.50	$116.00	$118.50
51 milliamperes up to 5 amperes	110.00	112.50	120.00	115.00	127.50	116.00	118.50	121.00

D-C Voltage Relays

Ranges	Type 1	Type 2	Type 2-S	Type 3	Type 3-S	Type 4*	Type 5*	Type 6*
0-2.5 millivolts or any value up to 25 volts	$110.00	$112.50	$120.00	$115.00	$127.50	$116.00	$118.50	$121.00

External resistance box required for higher voltages.

A-C Relays

Ranges	Type 1	Type 2	Type 2-S	Type 3	Type 3-S	Type 4*	Type 5*	Type 6*
10 microamperes up to 10 milliamperes	$121.00	$123.50	$131.00	$126.00	$138.50	$127.00	$129.50	$132.00
0.5 volt up to 150 volts	122.50	125.00	132.50	127.50	140.00	128.50	131.00	133.50

External box containing rectifier or resistance and rectifier supplied with all a-c relays.

Temperature Relays

Ranges	Type 1	Type 2	Type 2-S	Type 3	Type 3-S	Type 4*	Type 5*	Type 6*
State range required in °F. or °C., cold end temperature, resistance and material of couple, and leads to be used with the relay	$110.00	$112.50	$120.00	$115.00	$127.50	$116.00	$118.50	$121.00

Adjusted for use with the following and other standard thermocouples: Iron-Constantan, Copper-Constantan, Chromel-Copel, Chromel-Alumel and Platinum 10% Rhodium. (Thermocouples not supplied.)

Type N* Relay

Standard range .5-0-.5 Microamperes (1-0-1 Millivolts) d-c. Resistance 2000 ohms	$137.50

***Supplied with either 6 volt d-c or 120 volt a-c solenoid as standard. Special voltage solenoids available at a surcharge of $7.50.**

(Continued Next Page)

Model 712—Small Power Relay

Type 4 D-C ..... $37.25 s Type 2 ..... $34.25 s Type 110 A-C† ..... $40.25 s

†Type 110 A-C should not be used with Models 534, 634, 730, 813 (Sensitive non-magnetic contact type) or other relays having similar contact capacity.

Model 730—Sensitive Alarm Relay

Range: 0-4 milliamperes ..... Flush Type ..... $90.25 s Surface Type ..... $87.25 s

Model 813—Miniature Relays

Model 813 Sensitive Relay (Non-Magnetic contacts)		$48.50
Model 813 SENSITROL Relay:	Single magnetic contact, Manual Push Button	53.50
	Single magnetic contact, with Solenoid Reset	61.00
	Double magnetic contacts, Manual Push Button	55.00
	Double magnetic contacts, with Solenoid Reset	63.50

Prices listed above are for self-contained d-c Model 813 relays. Correspondence is necessary if external resistors or shunts are required to extend the current or voltage ranges. Model 813 relays can be supplied with a zero corrector at a surcharge of $7.50.

If a-c operation is desired, external rectifiers can be supplied for use with the SENSITROL relay. Solenoid voltages, other than standard, are available at a surcharge of $5.00.

Model 9980 Rectiformer

Price $25.50s

Model 1081—Hermetically Sealed Relay

Price $51.00

s—Normally carried in stock. Do not include "s" in your order write up!

Daystrom, Incorporated, DAYSTROM-WESTON SALES DIVISION, Newark 12, N. J., U. S. A.

11-59-1

Printed in U.S.A.

CIRCULAR B-35-H
SEPTEMBER 1958

WESTON *Sealed* SENSITROL RELAY

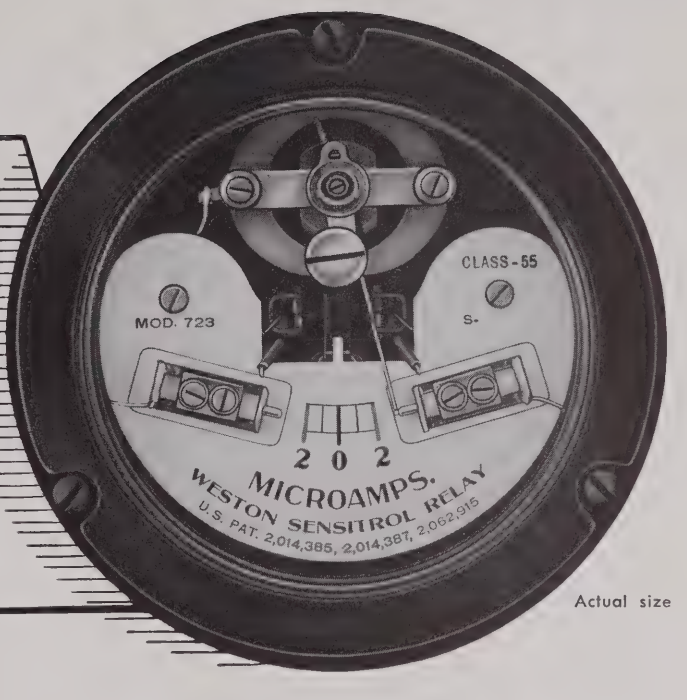

Actual size

- . . . ***Sealed***
- . . . ***Magnetically Shielded***
- . . . ***Internal Electrical Reset***
- . . . ***Solder Terminal Connections***

The Weston Model 723 Relay is a *sealed* SENSITROL* type relay incorporating a newly designed self-shielded core magnet mechanism and built-in electrical release device. It is self-contained, highly sensitive and reliable. Accuracy is within ±5% for d-c, approximately 10% for a-c depending on circuit conditions.

A variety of ranges can be supplied with double magnetic contacts or with single magnetic contacts to make contact on either increasing or on decreasing values. (Specify which when ordering.) Sensitivities as high as 1-0-1 microamperes can be made. Both a-c and d-c voltage ranges can be supplied self-contained up to 500 volts. Variations in response speed, coil resistance and zero suppression can also be furnished to fit special requirements. Scale length is approximately 18° or .4 inch. Minimum current for full scale deflection is 4 microamperes. Contact capacity of the TWINTACTS® (pairs of adjacent parallel magnetic contacts) is 100 ma. at 120 volts a-c or d-c.

The new electrical reset device, used for releasing the magnetic contacts, is *enclosed* in the instrument case. It consumes approximately one-half watt on d-c and one watt on a-c. Standard reset is for 6 volt d-c service. Other special voltages, including 120 volt a-c, are available at a surcharge.

The round flush metal case is designed with ample room to accommodate additional spools for the higher voltage ranges and, as required, a rectifier for self-contained a-c ranges.

The Model 723 is equipped with a sealed zero corrector and solder terminal connections. Mounting on a steel panel, and outside magnetic fields have little or no effect on its accuracy. It is sealed against moisture, dust and other external effects.

*SENSITROL—A registered trademark designating the magnetic contact instruments and relays manufactured exclusively by Weston Instruments, Division of Daystrom, Inc.

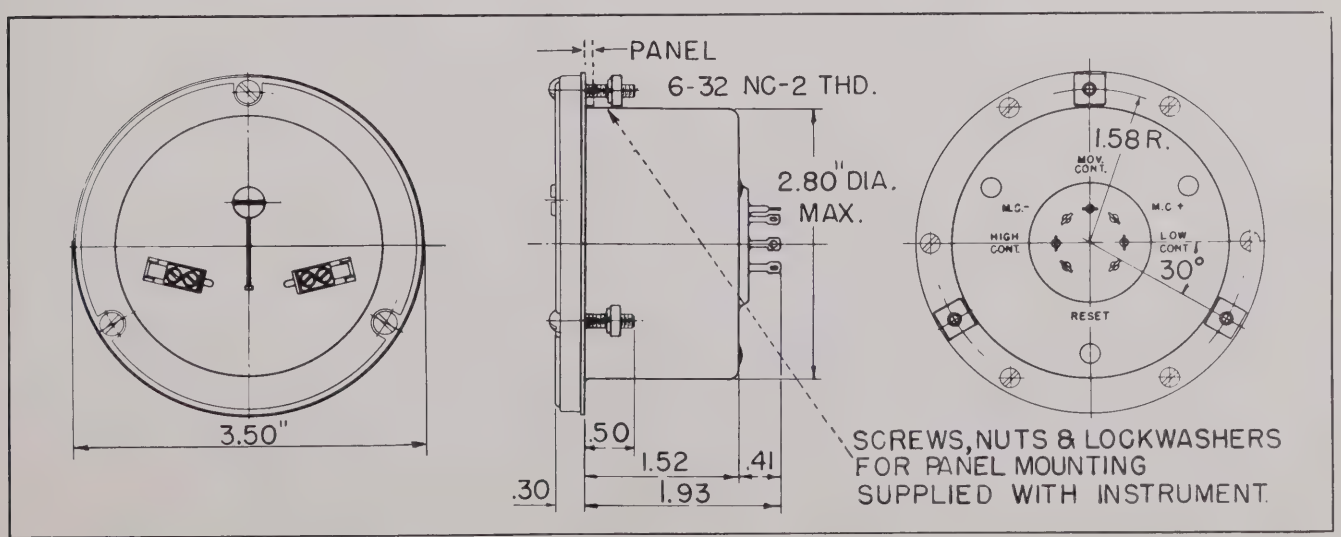

Ranges and Prices on Other Side

RANGES and PRICES

RANGE	SINGLE CONTACT	DOUBLE CONTACT
*1-0-1 mics or 0-2 mics d-c	$115.00	$120.00
4 mics or any value up to 50 ma. d-c	108.00	113.00
51 ma. up to 0.5 amp d-c	108.00	113.00
2.5 mv. up to 100 volts d-c	108.00	113.00
100 volts d-c up to 500 volts d-c	108.00 plus 1.50 per 100 volts or fraction thereof	113.00 plus 1.50 per 100 volts or fraction thereof
	*The coil resistance of these relays is approximately 4,050 ohms.	
5 mics up to 10 ma. a-c	113.00	118.00
½ volt up to 100 volts a-c	117.00	122.00
100 volts a-c up to 500 volts a-c	117.00 plus 1.50 per 100 volts or fraction thereof	122.00 plus 1.50 per 100 volts or fraction thereof
**°F or °C	113.00	118.00

**State range required, cold end temperature, resistance, and material of thermocouple and leads to be used with the relay.
All prices F.O.B. Newark, N. J. — Subject to change without notice.

Model 723 Relay supplied with 6 volt d-c reset as standard. Other special voltages, including 120 volt a-c, are available at a $7.50 surcharge.

Rear view of Model 723 Relay.

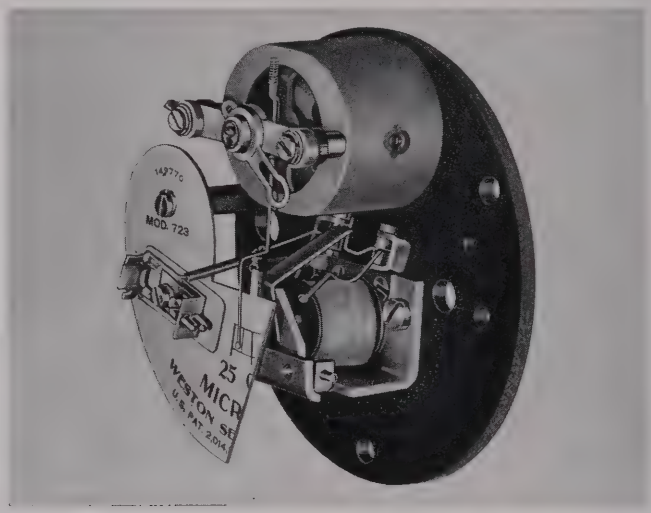

Case removed and scale cut-away to show location of internal contact release mechanism.

IMPORTANT — ORDERING INFORMATION

1. Model Number.
2. High or low contact adjustment (or both) in current or voltage. If single contact, state whether contact is to be made on increasing or on decreasing values.
3. Resistance—if it is important.
4. Electrical reset voltage.
5. Mounting position—(vertical, 45°F or horizontal). Adjusted for vertical mounting unless otherwise specified.
6. When ordering a thermocouple actuated temperature relay, state range in °F or °C, cold end temperature, material and resistance of the thermocouple and leads to be used with the relay.
7. If same relay has been purchased previously, refer to previous order, or mark order "repeat", giving if possible some reference such as previous order number, relay serial number, date, etc.

In order to assure the best possible operation of a Weston relay for any particular application, it is recommended that we be informed of the limiting conditions under which the relay is to be used. For example:

What will be the values of voltage and current in the local circuit? Is the local circuit inductive or non-inductive?

What are the values of resistance inductance or capacitance, as known?

Is any special accuracy required?

Where a special application is involved, it is of great assistance to have a circuit diagram showing where the relay is to be used. If auxiliary apparatus is employed, a complete description of it is very helpful.

Information on the complete line of Weston Sensitive Relays is contained in circular B-25.

WESTON INSTRUMENTS, DIVISION OF DAYSTROM, INCORPORATED, NEWARK 12, N. J., U. S. A.

PRINTED IN U.S.A.

WESTON

PRICE LIST 02-101

EFFECTIVE NOVEMBER 9, 1959

Sensitrol Relay

All Prices Subject to Change Without Notice and are F.O.B. Factory, Newark 12, N. J.

MODEL 723

RANGES AND PRICES

Range	Single Contact	Double Contact
*1-0-1 mics or 0/2 mics d-c	$120.75	$125.75
4 mics or any value up to 50 ma. d-c	$113.75	$118.75
51 ma. up to 0.5 amp d-c	113.75	118.75
2.5 mv. up to 100 volts d-c	113.75	118.75
100 volts d-c up to 500 volts d-c	113.75 plus 1.50 per 100 volts or fraction thereof	118.75 plus 1.50 per 100 volts or fraction thereof
*The coil resistance of these relays is approximately 4,050 ohms.		
5 mics up to 10 ma. a-c	118.75	118.75
½ volt up to 100 volts a-c	122.75	127.75
100 volts a-c up to 500 volts a-c	122.75 plus 1.50 per 100 volts or fraction thereof	127.75 plus 1.50 per 100 volts or fraction thereof
**°F or °C	118.75	123.75
**State range required, cold end temperature, resistance, and material of thermocouple and leads to be used with the relay.		

WESTON

NOW, due to a completely new simplified core magnet design exclusive with Weston, it is possible to offer engineers, designers and builders of alarm or control devices a new all-purpose Sensitrol Relay at an unusually low price. Available in a single adjustable range with many of the advanced features of other Weston Sensitrols, it is the ideal relay for solving alarm or control problems, particularly in the development stage.

With a Model 1092 in your breadboard circuit you can eliminate the need for pinpointing operating values of current or voltage through elaborate calculations or electrical measurements. The "cut and try" approach is often a time saver, and this relay's wide range of adjustment will permit an almost infinite number of accurately repeatable settings by the simple turn of one adjusting screw.

The Application Manual furnished with each relay illustrates a number of circuit possibilities. Throttling action is provided by pulsing circuits which eliminate troublesome overshoot in many control applications.

For on-off control, a simple setting of this new relay can be made to hold such variables as temperature, voltage or light level constant within very narrow limits.

As a demonstration unit for class room or commercial display work, its flexibility can't be beat. It is equally versatile when used with thermocouples, photoelectric cells or other low energy sources. Typical circuits of this type are also outlined in the Application Manual.

Two of these inexpensive Sensitrols connected in opposition will provide close high-low control adjustable over a wide span by means of the simple screwdriver adjustment feature.

If your control or alarm-equipped product is offered in a variety of ranges, types or sizes, the Weston Model 1092 means double savings. Stocking requirements are reduced — one model handles all applications . . . and you are assured maximum quantity discounts with a minimum of paperwork.

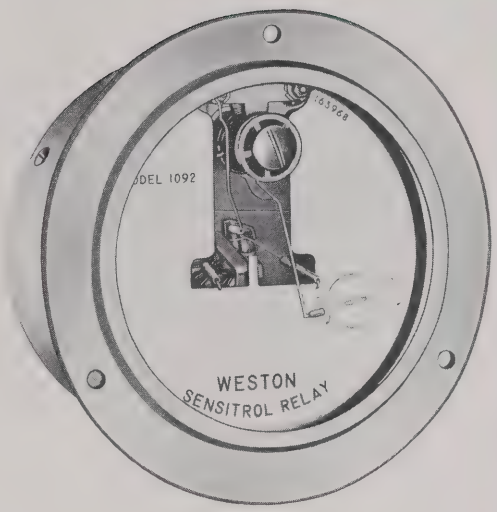

LOW COST SENSITROL RELAY

WITH WIDE-RANGE ADJUSTABILITY

THE WESTON MODEL 1092

A Completely NEW LOW COST ALL PURPOSE Sensitrol Relay

FEATURES

Sensitivity

Operates on a few microamperes or a low millivolt input.

Adjustability

Relay can be set to close at any value of direct current from five to 50 microamperes or a comparable millivolt span of zero to 100.

Positive Action

Has quick closing time-tested magnetic contacts as used in the finest Weston Relays for many years.

Versatility

Can be connected to make on either increasing or decreasing current — zero left or right.

High Contact Capacity

Handles 100 milliamperes at 120 volts A-C without chatter.

Simplicity

Single screw driver slot adjustment — requires no auxiliary hold-in coil — no stand-by power.

Compactness

Complete relay including electrical reset contained in 3½" round flush case for panel mounting — 1½" deep.

Lightness

Only 3 oz. complete, including built-in reset mechanism.

Reliability

Backed by Weston experience and Sensitrol reputation.

Low Cost

Available at only a fraction of any other Sensitrol Relay.

Magnetically Shielded

Core magnet type mechanism is unaffected by external magnetic influences.

Accuracy

Once set, will repeat within very narrow limits (1% attainable).

Automatic Operation

Automatic resetting is attainable through the use of suggested circuits. Self-contained reset mechanism is designed for continuous heavy duty operation from any 100-120 volt A-C or 48 volt D-C source.

SPECIFICATIONS

Duty ..... Continuous

Sensitivity....0-50 microamps (0-100 mv) adjustable

Contact Rating. 120 volts A-C or D-C; 100 ma resistive

DC Moving Coil Resistance.....2100 ohms ± 20%

Moving Coil Power Consumption. . .006 milliwatts @ 50 microamps

Overload ..... 500 microamps

Response Time. . .0.5 Sec. Approx. with 10% overload

Dielectric Strength. . .250 volts RMS between all non-connected terminals and between terminals and case

Insulation Resistance.....100 megohms minimum @ 100 volts D-C

Mounting Position. . .Can be mounted in any position on magnetic or non-magnetic panel

Reset Voltage..... 120 volts A-C of 48 volts D-C continuous

Reset Coil Power. . .Approximately 1 watt at 120 volts A-C and ⅔ watt at 48 volts D-C

Reset Time..... ¼ second

Life..... 1,000,000 operations minimum at rated contact load

List Price..... $30.00

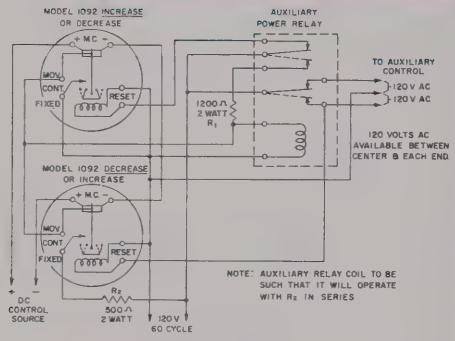
MODEL 1092 INCREASE OR DECREASE
AUXILIARY POWER RELAY
TO AUXILIARY CONTROL
120 V AC
120 V AC
1200Ω 2 WATT R1
120 VOLTS AC AVAILABLE BETWEEN CENTER & EACH END
MODEL 1092 DECREASE OR INCREASE
NOTE: AUXILIARY RELAY COIL TO BE SUCH THAT IT WILL OPERATE WITH R2 IN SERIES
DC CONTROL SOURCE
500Ω 2 WATT R2
120V 60 CYCLE

AUTOMATIC HIGH-LOW CONTROL

By utilizing two Model 1092 relays, and one auxiliary power relay in a "flip-flop" type circuit such variables as temperature, speed, light intensity, etc. can be controlled between narrow limits. Either one or the other reset mechanisms will be energized through the auxiliary relay contacts, depending upon whether the "high" or "low" control has been actuated. At this point the condition reverses and is maintained until the other extreme of the control limit is reached. This control can be maintained between various limits depending on the setting of each of the relays.

By either connecting the Model 1092 relays as indicated, or reversing the polarities of both, the circuit can be made fail-safe in either direction, depending on the individual application.

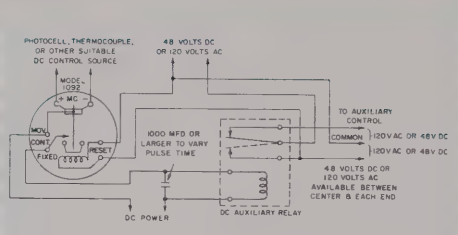
PHOTOCELL, THERMOCOUPLE, OR OTHER SUITABLE DC CONTROL SOURCE
48 VOLTS DC OR 120 VOLTS AC
MODEL 1092
TO AUXILIARY CONTROL
COMMON
120V AC OR 48V DC
120V AC OR 48V DC
1000 MFD OR LARGER TO VARY PULSE TIME
48 VOLTS DC OR 120 VOLTS AC AVAILABLE BETWEEN CENTER & EACH END
DC POWER
DC AUXILIARY RELAY

CONTINUOUS PULSING CONTROL

The Model 1092 Sensitrol Relay and an auxiliary power relay may be used to provide simple continuous pulsing control. The Model 1092 contacts energize the auxiliary relay coil which in turn pulses the 1092 reset and also the correction circuit. This control requires the use of a D.C. auxiliary relay in order to allow a delay in the drop-out time by the use of a capacitor across its coil. This circuit is practical as an intermittent alarm or may be used in any situation which will be changed or corrected by short pulses of current such as maintaining temperature in liquids.

The circuit is self-compensating in that the pulse rate increases in proportion to the amount by which the control current exceeds the 1092 contact value, and decreases as the control point is reached, because of the corrective action. Pulsing discontinues when the control source is such that the Model 1092 does not make contact and remains in this condition until correction is again required.

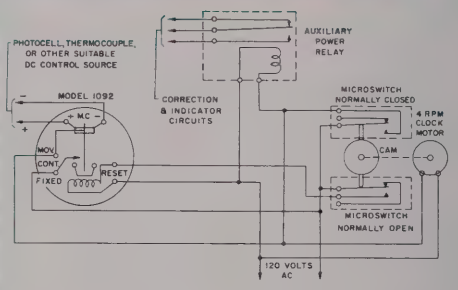

SENSING CONTROL CIRCUIT

In situations which require longer periods of correction time than can be attained with a "pulsing" network the above combination may be used.

The Model 1092 controls the power to the clock motor which in turn operates the two Microswitches alternately by means of the eccentric cam. Correction occurs continually through the slave relay and is sensed every one-half revolution by resetting the model 1092. If the relay contacts do not re-make, correction is discontinued and the clock motor stops when the normally closed microswitch is opened. If the contacts re-make after being reset, correction continues (the normally closed Microswitch is short-circuited) for another one-half revolution of the cam.

WESTON

INSTRUMENTS, DIVISION OF DAYSTROM, INCORPORATED

NEWARK 12, N. J., U. S. A.

B-37-A 1-58

PRINTED IN U.S.A.

WESTON

PRICE LIST 02-103

EFFECTIVE NOVEMBER 9, 1959

Sensitrol Relay

All Prices Subject to Change Without Notice and are F.O.B. Factory, Newark 12, N. J.

MODEL 1092 ..... $34.75

SPECIFICATIONS

DUTY	Continuous
SENSITIVITY	0-50 microamps (0-100 mv) adjustable
CONTACTS	Magnetic – 100 ma at 120 v. A-C or D-C
DC MOVING COIL RESISTANCE	2100 ohms ±20%
MOVING COIL POWER CONSUMPTION	.006 milliwatts @ 50 microamps
OVERLOAD	500 microamps
RESPONSE TIME	0.5 Sec. Approx. with 10% overload
DIELECTRIC STRENGTH	250 volts RMS between all non-connected terminals and between terminals and case
INSULATION RESISTANCE	100 megohms minimum @ 100 volts D-C
MOUNTING POSITION	Can be mounted in any position on magnetic or non-magnetic panel
RESET VOLTAGE	120 volts A-C of 48 volts D-C continuous
RESET COIL POWER	Approximately 1 watt at 120 volts A-C and 2/3 watt at 48 volts D-C
RESET TIME	1/4 second
LIFE	1,000,000 operations minimum with non-inductive or properly suppressed inductive load

Daystrom, Incorporated, DAYSTROM – WESTON SALES DIVISION, Newark 12, N. J., U.S.A.

PRINTED IN U.S.A.

11-59-1

WESTON

MODEL 1093 RELAY

CIRCULAR 02-104-A
FEBRUARY 1959

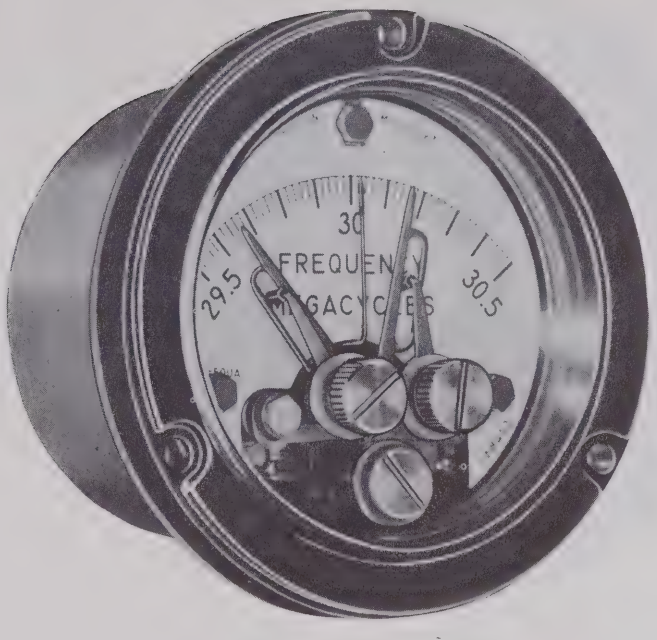

The Model 1093 Relay is a sealed, ruggedized DC meter type relay utilizing a load current-contact aiding coil. A second winding is added to the moving coil structure and connected in series with the contacts and load circuit in such a way that the load current passing through this winding increases the torque of the meter mechanism, thus increasing the contact pressure. In this way, good contact is achieved, together with a "locking" feature. The contacts remain closed until the load circuit is momentarily opened by some external means even though the current in the "sensing" coil may decrease.

The Model 1093 is designed to meet the applicable portions of military specifications covering ruggedized, sealed instruments.

PRELIMINARY SPECIFICATIONS

MODEL 1093 LOAD CURRENT-CONTACT AIDING RELAY

Minimum Range: 20 microamps DC at 3000 ohms, with 86° scale.

Scale Length: 100 degrees, approx. 1.8 inches, for ranges of 75 microamps and over.

Maximum Zero Suppression: Depending upon range, 2 scale lengths maximum.

Contact Adjustment: Preset or adjustable contacts. Adjustable contacts have knurled and slotted adjusting knobs, suitable for hand or screwdriver adjustment.

Contact Arrangement: Two independently adjustable (or pre-adjusted) contacts. Single adjustable (or pre-adjusted) contact, to close on either increasing or decreasing current.

Contact Rating: Standard: 5-25 ma DC at 75 to 125 volts DC. (Contact ratings as high as 300 ma can be supplied; however, correspondence is necessary due to possible changes in the aiding coil and/or voltage rating.

Contact Aiding Coil Arrangements:

a. single aiding coil with one side common with sensing coil.
b. single aiding coil, completely isolated from sensing coil.
c. two aiding coils, with one point common with both, but isolated from sensing coil.
d. two aiding coils, with each coil common to sensing coil.

Isolated Coils: Insulation between coils is normally rated at 50 volts DC. Other requirements can often be met; correspondence is invited.

Terminals: All connections are made to a sealed header with solder type terminals.

Zero Corrector: Sealed, screwdriver operated.

Case: Sealed 2.695" diameter round flush mounting metal case with plastic window.

WESTON INSTRUMENTS, DIVISION OF DAYSTROM, INCORPORATED
Newark 12, New Jersey, U.S.A.

PRINTED IN U.S.A.

WESTON

MODEL 1094 A-C SENSITROL RELAY

CIRCULAR 02-105-A
NOVEMBER 9, 1959
SUPERSEDES OCTOBER, 1958

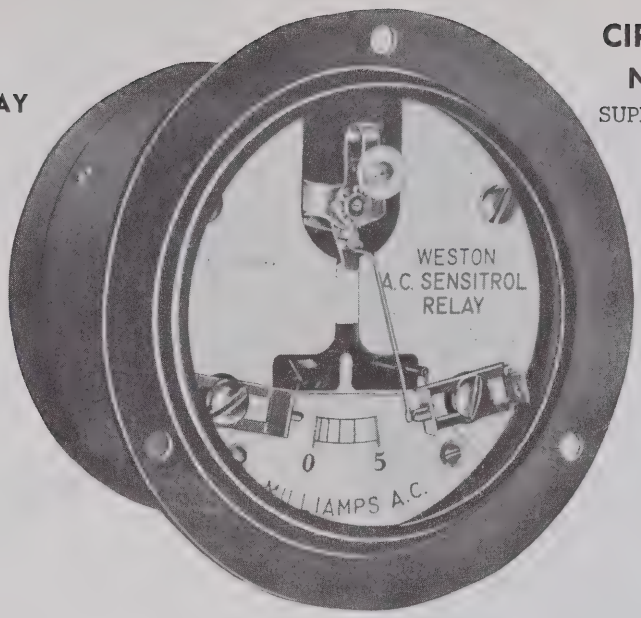

The Model 1094 A-C Sensitrol Relay is the first contact making instrument to employ a moving iron mechanism. It can be supplied with either one or two preset contacts and in ranges as low as 3 milliamps. As with other moving iron instruments, the mechanism deflects in proportion to the true RMS of the impressed current or voltage and, therefore, offers an advantage over the rectifier type instrument relays. AC instrument relay applications were previously handled only by rectifier types which respond to average value and have drawbacks associated with wave form error, temperature effects, and high cost.

PRELIMINARY SPECIFICATIONS

Type: AC Moving iron type mechanism

Frequency: Normally adjusted for use on frequencies of 25-125 cycles. Also available adjusted for either 400 or 800 cycles. Correspondence is invited concerning relays to operate over a span of frequencies.

AC Sensitivity (and minimum span): 3 ma

Scale Length: 25 degrees

Maximum zero suppression: 8 scale lengths (with min. span of 3 ma on scale)

Standard Range: 5 amps (may be used with current transformers)

Other Ranges: Current ranges from 3 ma to 5 amps (self-contained). Voltage ranges from 6 volts to 300 volts (self-contained). (Higher voltage ranges require the use of an external resistor).

Contact Arrangement: Either one or two locking magnetic contacts. Single contact type "makes" on either increase or decrease (as specified). Double contact types have one contact to "make" on increase, other to "make" on decrease.

Contact Capacity: 100 ma to 120 volts AC or DC

Reset: Self-contained electromagnetic, 120 volts, 60 cps or 48 volts DC

Zero Corrector: Normally supplied except on suppressed zero relays.

Terminals: Solder type, rear connected.

Case: Black finished, round, flush mounting metal.

Dimensions: Flange diameter 3.25"
Barrell diameter 2.6"
Depth (overall incl terminals) 2.42"

PRICES – MODEL 1094

A-C Milliammeter	$81.00	A-C Voltmeters: 6-50 volts F.S.	$83.50
A-C Ammeter (to 5 amps)	81.00	above 50 to 300 volts F.S.	86.00

Prices Subject to Change Without Notice.

Daystrom, Incorporated, DAYSTROM-WESTON SALES DIVISION, Newark 12, N. J., U. S. A.

PRINTED IN U.S.A.

Weston CONTACT MAKING Instruments

SOME FIELDS OF APPLICATION

- . . . **Automatic testing of vacuum tubes.**
- . . . **Control of voltage or current levels of stand-by battery systems.**
- . . . **Over or Under voltage alarm.**
- . . . **Indication and control of speed.**
- . . . **Control of voltage or current levels in electroplating processes.**
- . . . **Temperature alarm in resistance bulb bridge.**
- . . . **Over stress alarm when used in conjunction with strain gauges.**

Model 1087 provides in one instrument not only an indication but also a means of control when used in conjunction with auxiliary equipment such as small power relays or electronic relay systems. It is a core magnet type of switchboard instrument, specially designed for contact making service, incorporating two adjustable stationary contacts and a moving contact carried by the pointer. The low and high stationary contacts mounted on the indices, "make" or "break" under direct influence of the current in the instrument moving coil. Each index indicates the point of operation of the contact and can be independently adjusted over the entire scale range by means of two insulated knobs.

The contacts are designed for use in a circuit having a maximum rating of 35 milliamperes, 6 volts d-c, non-inductive, which allows the direct use of Weston Model 712 Type 4 Power Relay, or an electrical equivalent wherein the inductive transient does not exceed 12 volts. In many instances (or generally where the sensitivity is less than 1 milliampere, and the torque is low), it is desirable to use some form of electronic switch or relay, wherein the contacts of Model 1087 operate in the grid circuit of a vacuum tube or a thyratron. Correspondence invited on ranges of 1 milliampere or less, or where the scale differential is less than 1 milliampere.

Specifications—Model 1087

CASE: Flush type, back connected, pressed steel, easily removable bakelite front.

ZERO CORRECTOR: Made dustproof.

INDICES: Geared to insulated adjusting knobs to give accurate alignment with pointer.

SCALE: Legible divisions and numerals. Usually 30 to 50 divisions.

CONTACT MATERIAL: Long life platinum-iridium.

CONTACT RATING: 35 ma, 6 v d-c, non-inductive.

DIELECTRIC STRENGTH: Normal test voltage is 500 v, 60 cycles, rms between moving coil and contact circuits . . . 2000 volts between case and internal circuits.

MECHANISM: Self-shielded core magnet type.

ACCURACY: Indicating Instrument — ±1% of full scale. Contact Setting — As high as ±1%, dependent upon care with which indices are set and characteristics of auxiliary equipment.

WEIGHT: Approximately 2¼ lbs.

Continued on Other Side

Ranges

D-C Current: 100 microamperes and up.
(External 100 mv shunts are required for ammeters)

D-C Voltage: Self-contained to 300 volts.

A-C Rectifier Type Instruments are available. Correspondence is invited.

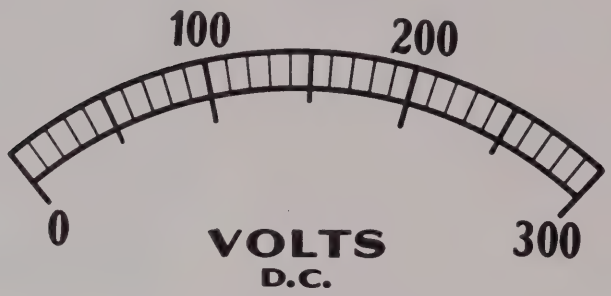

Full Size Scale—3.5" long

Wiring Diagram

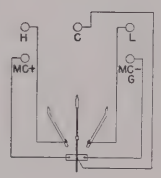

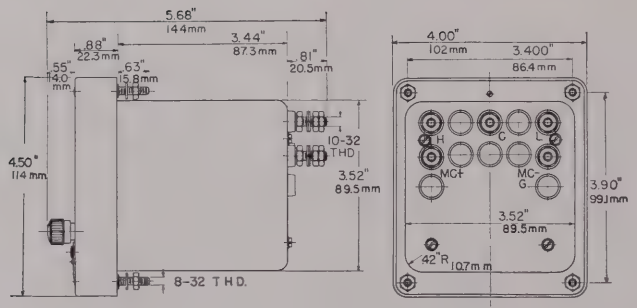

Daystrom, Incorporated, DAYSTORM-WESTON SALES DIVISION, Newark 12, N. J., U. S. A.

PRINTED IN U.S.A.

WESTON

PRICE LIST 02-200

EFFECTIVE NOVEMBER 9, 1959

Contact Making Instruments

All Prices Subject to Change Without Notice and are F.O.B. Factory, Newark 12, N. J.

MODEL 1087

RANGES – PRICES
D-C CURRENT: 100 microamperes and up... $201.00 (External 100 mv shunts are required for ammeters)
D-C Voltage: Self-contained to 300 volts..... $201.00
A-C Rectifier Type Instruments are available.

s – Normally carried in stock. Do not include "s" in your order write-up.

Daystrom, Incorporated, DAYSTROM – WESTON SALES DIVISION, Newark 12, N. J., U.S.A.

PRINTED IN U.S.A.

11-59-1

02-400-A
NOVEMBER 1959

WESTON

*PHOTRONIC
PHOTOELECTRIC CELLS

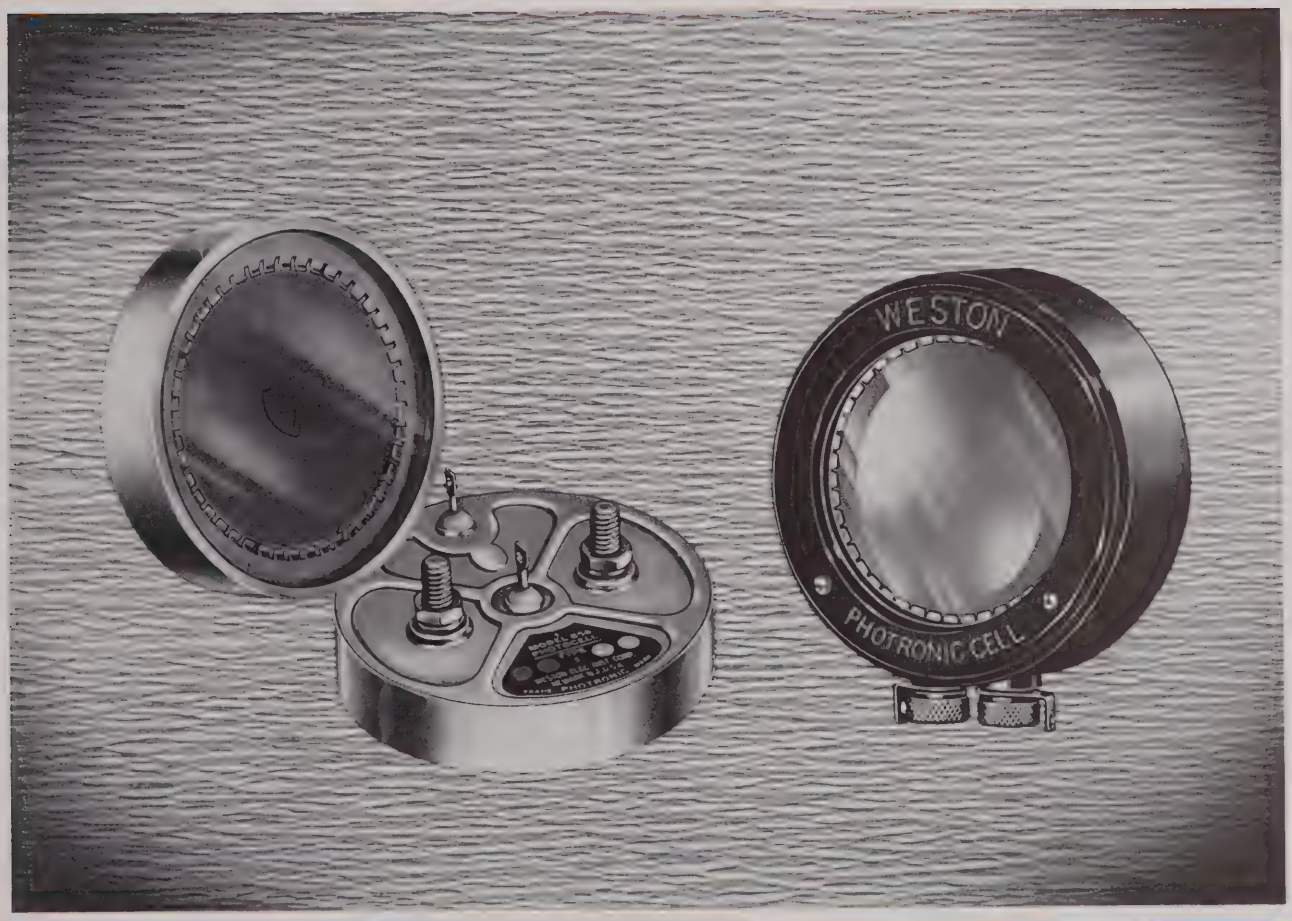

Daystrom, Incorporated, Daystrom-Weston Sales Division
Newark 12, New Jersey, U. S. A.

*PHOTRONIC—A registered trade-mark designating the photoelectric cells and photoelectric devices manufactured exclusively by Weston Instruments, Division of Daystrom, Inc.

Model 856

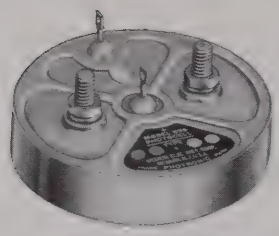

Model 856—Rear View

Model 594

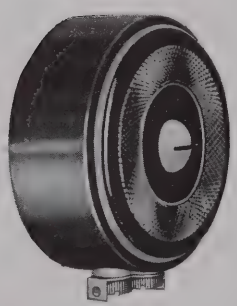

Model 594—Rear View

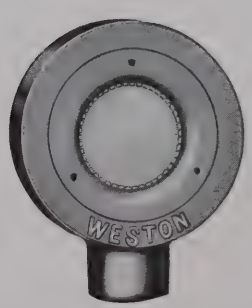

Single Cell Mounted in Weatherproof Housing

GENERAL INFORMATION

Models 856 and 594 employ the time-tested Weston barrier-layer (dry disc) self-generating cell. Inherently rugged and simple in design, the cell is resistant to mechanical damage. Consisting essentially of a metal disc to which a light sensitive material is bonded, it converts light energy into electrical energy without physical or chemical change. Thus the life of the cell is not limited in the usual sense of the word as applied to most current producing units. The effective diameter of the sensitive surface is 1.47 inches and the effective area is 1.70 square inches or 0.0118 square feet.

MODEL 856 HERMETICALLY SEALED *PHOTRONIC CELL

Model 856 is designed for use under adverse, as well as favorable atmospheric conditions. Housed in a metal case, filled with helium and hermetically sealed, it is built to resist the two most serious hazards to any barrier-layer cell . . . moisture and chemical attack. Moisture and corrosive gases are effectively sealed out.

The high thermal conductivity of the helium and the metal case facilitates cooling by water jacket or blower, when necessary. This makes it possible to accommodate higher levels of total radiation without exceeding the recommended maximum cell temperature of 60°C (140°F).

Another advantage of the hermetically sealed cell is a material reduction in fatigue or drift, due to moisture. This characteristic, present to some degree in all cells of this general type, is held to a minimum by the dry, inert atmosphere surrounding the cell element.

The electro-tinned brass case of the Model 856 cell is 7/16" deep and 2" in diameter, with two 3/8" x 8-32 mounting studs on 1" centers and two terminals on the back. The ends of the terminals are flattened and pierced for easy soldering.

MODEL 594 *PHOTRONIC CELL

Model 594 is available for use where atmospheric conditions are favorable and for interchangeability in existing apparatus. Housed in a bakelite case 1" deep and 2 1/4" in diameter, it is regularly supplied with threaded terminals and a mounting screw in the center of the back. It can be furnished with prong connections, at no extra cost, for mounting in a 4 pin medium vacuum tube socket.

CELLS FOR GENERAL USE

The cells listed below are recommended for general photometric applications such as light measurement, color matching, turbidity measurements, etc. They are identified by means of colored dots on the case.

Models		†Approx. Microamperes per Foot-Candle	Approx. Linearity Factor (See Note)	Identification
856RB	594RB	4.8 ± .3	0.80 or better	Red-Blue
856RR	594RR	4.4 ± .3	0.78 or better	Red-Red
856YR	594YR	4.0 ± .3	0.75 or better	Yellow-Red
856GB	594GB	3.5 ± .5	0.75 or better	Green-Blue
856BB	594BB	2.9 ± .5	0.75 or better	Blue-Blue
856YY	594YY	2.6 ± .3	0.86 or better	Yellow-Yellow
856YG††	594YG††	0.5 ± .1	0.87 or better	Yellow-Green

Note: The approximate linearity factors and approximate limits of selection represent the ratio of output per foot-candle at 200 foot-candles to that at 20 foot-candles for an external circuit resistance of 200 ohms. Best linearity is obtained at the lowest external resistance. For example, at 3 ohms the linearity factors are nearly 1.00, which gives a straight line characteristic.

†The approximate current output and approximate limits of selection given are for a light intensity of 20 foot-candles and an external circuit resistance of 200 ohms.

††Specially selected for use at high illumination and exposure to North sky.

CELLS FOR USE WITH RELAYS

These cells are carefully selected for characteristics most suitable for such application. To properly order and identify relay cells which are also rated at 20 foot-candles and 200 ohms external resistance, consult the following table.

Models		Approx. Microamperes per Foot-Candle	Identification Model 856	Identification Model 594
*856R	*594R	4.5	One Red Dot	Red Back Plate
**856B	**594B	3.5	One Blue Dot	Blue Back Plate
***856Y	***594Y	2.5	One Yellow Dot	Yellow Back Plate

*Selected for highest possible output. Minimum output is stated but usually will be found higher.
**For relay application where highest sensitivity is not required.
***Processed for relay applications where the cell faces the North sky.

*PHOTRONIC—A registered trade-mark
devices manufactured exclusively by

ORDERING INFORMATION

The cells listed for General Use can be furnished in pairs only, matched for spectral uniformity, for linearity, or for output and linearity. Your order for cells with special characteristics should indicate: (1) range of light intensity; (2) resistance of the external circuit; (3) applicable symbols listed below.

Where extra protection is required against excessive moisture, corrosive fumes, or mechanical damage, Model 856 Hermetically Sealed Cell in a weatherproof housing is recommended. A weatherproof housing for three cells connected in parallel is also available. This arrangement produces approximately three times the single cell current for the same illumination.

Symbol	Special Characteristics
*L	Linearity matched within 2% as described on page 2
*O	Output and linearity matched within 2% as described on page 2
*S	†Spectral Selection
V	††Viscor Filter equipped
W	Weatherproof housing—For single cell or three cells

*Supplied in pairs only.

†All photoelectric cells differ somewhat in spectral sensitivity. Cells spectrally selected will be within 1/5 of their normal variation.

††When Viscor Filter equipped, the cell output is reduced to approximately 40% of the normal cell output. For further description of Viscor Filter, see below.

Example of the use of the above symbols: Two Model 856GB-OS indicates that a pair of cells having an output of 3.5 microamperes per foot-candle are desired with matched output, linearity and spectral response.

THE ★★VISCOR FILTER

Viscor filters were developed for the specific purpose of making the effective spectral sensitivity of the PHOTRONIC cell, assembled with filter, match the standard I.C.I. luminosity curve. In order to make the cell conform to this curve, it is necessary to reduce its blue and red response. The Viscor filter produces this effect by absorbing light, falling on the cell at normal incidence, in proportion to the required percent reduction in the cell response at each wavelength.

★★VISCOR—A registered trademark designating the visual correction filter available only in Weston *PHOTRONIC Photoelectric Cells and Illumination Meters. Instruments equipped with Viscor Filters measure correctly the visual intensity of practically all light sources.

CELL RESISTANCES

The cell has an internal leakage path between electrodes which acts as a resistance in parallel with the external circuit, and has a surface resistance which acts in series with the external circuit (see below).

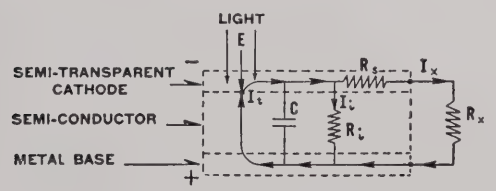

Cross Sectional View of PHOTRONIC Cell Illustrating Electron Flow. (Not to scale.)

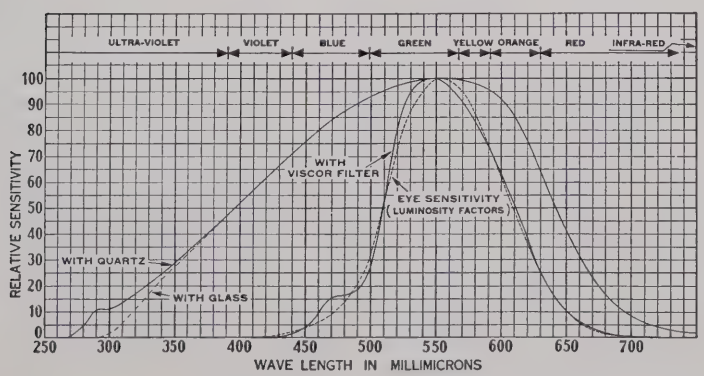

Spectral Sensitivity of PHOTRONIC Cells

SPECIAL SIZES AND SHAPES

The manufacture of photoelectric cells involves the use of special tools for each size and it is impractical to manufacture special sizes and shapes unless a quantity is involved.

Correspondence is invited on commercial applications involving photometric and colorimetric problems, higher light intensities, higher output or other than standard shapes. The nature of the application, circuit characteristics, and anticipated quantities should be clearly stated.

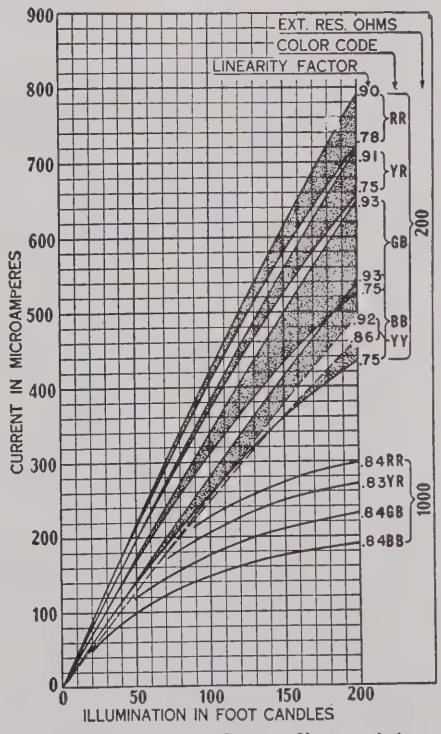

Illumination-Current Output Characteristics of Average PHOTRONIC Cells

NOTE: (1) Output at 200 ohms external resistance is shown for limits of linearity used in selection. Values at 1000 ohms are for average linearity. (2) Output of individual cells will vary from the values shown in proportion to their variation from average output.

nating the photoelectric cells and photoelectric
ton Instruments, Division of Daystrom, Inc.

INSTRUMENTS RECOMMENDED FOR MEASURING OUTPUT OF PHOTRONIC CELLS

Representative instruments most satisfactory for measuring the output of *PHOTRONIC Cells are illustrated below. All are of the high sensitivity, low resistance type which most cell applications require. Other ranges and models can be supplied on request.

MODEL 430

MODEL 440

MODEL 301

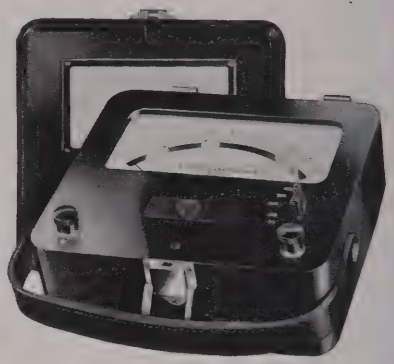

MODEL 622

WESTON INSTRUMENTS USING PHOTRONIC PHOTOELECTRIC CELLS

Foot Candle Meter.....Model 614	Illumination Meter.....Model 756
Sightmeter.....Model 703	Foot-Lambert Meter.....Model 759
Illumination Control.....Model 709	Photographic Analyzer.....Model 877
Health Protection Densitometer.....Model 877 Types 5 and 6	

* PHOTRONIC—A registered trade-mark.

WESTON DISTRICT OFFICES

ALBANY—5 Herbert Drive, Latham, N. Y.....STate 5-5161
BOSTON—66 Central St., Wellesley 81, Mass.....CEdar 5-4300
BUFFALO 26—4446 Main St.....CIrcle 3355
CHICAGO 6—Room 1222, 205 W. Wacker Dr.....FRanklin 2-4656
CINCINNATI 37—7613 Reading Road.....VAlley 1-9105
CLEVELAND 28—3951 Lee Road.....SKyline 2-3030
DAYTON 2—11 W. Monument Avenue.....BAldwin 2-8164
DETROIT 21—16607 James Couzens Highway.....DIamond 1-2121
HARRISBURG—1511 North Front St.....CEdar 8-4276
HOUSTON 27—3405 Mercer.....JAckson 6-4115
KNOXVILLE 21, TENN.—2917 Sanderson Rd.....KNoxville 5-5632
LOS ANGELES 7—2001 South Grand Ave.....RIchmond 9-2361
MILWAUKEE 3—617 No. 2nd St., Room 904.....BRoadway 2-1538
NEW ORLEANS 12—Suite A, Nola Bldg., 407 Carondelet St.—JAckson 5-9794
NEW YORK 7—Room 1775, 50 Church St.....WOrth 4-3510
PHILADELPHIA 4—101 N. 33rd St.....BAring 2-6458—6443—6444
ROCHESTER 4, N. Y.—207 Burke Building 5 Saint Paul St.—BAker 5-9546
SAN DIEGO—4455 Miramar Rd., La Jolla, Calif.....GLencourt 4-0421
SAN FRANCISCO 3—147 10th St.....UNderhill 3-4250
SYRACUSE—4308 E. Genesee St., DeWitt 14, N. Y.....GIbson 6-4330
UNION, N. J. (Newark)—Route 22 & Caldwell Ave.....MUrdock 8-2020
WASHINGTON 4, D. C.—429 Pennsylvania Building 425 13th Street, N. W.....DIstrict 7-3636

WESTON REPRESENTATIVES

AMARILLO—Butler and Land.....1505 W. Tenth St.—DRake 6-5255
ATLANTA 18—E. A. Thornwell, Inc. 1537 Howell Mill Road, N. W.—TRinity 5-7895
BALTIMORE—Thomas H. Closs 21 W. Pennsylvania Ave., Towson 4, Md.—VAlley 5-4445
CHARLOTTE 2, N. C.—Ranson, Wallace & Company 116½ E. 4th St.—EDison 4-4244
DALLAS 5—Butler and Land.....5538 Dyer St.—EMerson 1-6631
DENVER 16—Peterson Company, Inc. 4949 Colorado Blvd.—DExter 3-5434
JACKSON—Curtis H. Stout, Inc.....706 Electric Bldg.—JAckson 4-4326
JACKSONVILLE—Ward Engineering Co., Inc. 2727 Phyllis St.—EVergreen 8-7656
KANSAS CITY—C. B. Fall Co. 11201 Longview Road, Hickman Mills 34, Mo.—SOuth 1-6545
LITTLE ROCK, ARK.—Curtis H. Stout, Inc. 400 Shall St., P. O. Box 107—FRanklin 4-8201
MEMPHIS—Curtis H. Stout, Inc.....718 M & M Bldg.—JAckson 6-7601
MIDDLETOWN, CONN.—Dittman & Greer, Inc. So. Main St. Extension—DIamond 6-9606
MINNEAPOLIS 3—Pinkney & Hine.....1925 Nicollet Ave.—FEderal 8-0523
NEW ORLEANS 12—W. J. Keller.....415 Natchez St.—MAgnolia 3603-4
ORLANDO—Ward Engineering Co., Inc. 1015 W. Central Ave.—GArden 2-4295, 3-9721
PHOENIX—J. E. Redmond Supply Co. 625 W. Madison St., P. O. Drawer 869—ALpine 4-8471
PITTSBURGH 22—Russell F. Clark Co. 1409 Clark Bldg.—ATlantic 1-8089, 1-8090
RICHMOND 26, VA.—Ranson, Wallace & Co. P. O. Box 8762, West Hampton Station—ATlantic 8-8758
SHREVEPORT—Curtis H. Stout, Inc. 409 Fairfield Bldg.—SHreveport 5-5485
ST. LOUIS 1—C. B. Fall Co...317 N. 11th St., Suite 1001—CHestnut 1-2433
TULSA 1, OKLA.—Riddle and Hubbell Company 302 S. Cheyenne Ave., P. O. Box 727—LUther 5-5624

Canada

MONTREAL 9, P.Q.—Daystrom, Ltd.....5430 Ferrier St.—RIverside 8-8471
TORONTO 10, ONT.—Daystrom, Ltd.....840 Caledonia Rd.—RUssell 7-1114

Export and Overseas

DAYSTROM INTERNATIONAL....100 Empire St., Newark 12, N. J.....BIgelow 8-2141

Daystrom, Incorporated, DAYSTORM-WESTON SALES DIVISION, Newark 12, N. J., U. S. A.

PRINTED IN U.S.A.

WESTON

PRICE LIST 02-400

EFFECTIVE NOVEMBER 9, 1959

PHOTRONIC® Photoelectric Cells

All Prices Subject to Change Without Notice and are F.O.B. Factory, Newark 12, N. J.

SUPERSEDES 8/57

Cells for General Use

Model	Price	Model	Price
856RB	$29.25 s	594RB	$28.25 s
856RR	27.25 s	594RR	26.25 s
856YR	25.25 s	594YR	24.25 s
856GB	23.25 s	594GB	22.25 s
856BB	21.25	594BB	20.25
856YY	25.25 s	594YY	24.25 s
856YG	23.25 s	594YG	22.25 s

Cells For Use With Relays

856R	$26.25 s	594R	$25.25 s
856B	20.25 s	594B	19.25 s
856Y	24.25 s	594Y	23.25 s

Symbol	Surcharge
*L	$ 9.00
*O	11.25
*S	22.50
V	20.25
W	For single cell $36.00—For three cells 45.00

Example of the use of the above symbols: Two Model 856GB-OS's indicate that a pair of cells having an output of 3.5 microamperes per foot-candle are desired with matched output, linearity and special response, and are priced at $54.75 each.

*Supplied in pairs only.

s—Normally carried in stock. Do not include "s" in your order write up!

Daystrom, Incorporated, DAYSTROM-WESTON SALES DIVISION, Newark 12, N. J., U. S. A.

Printed in U.S.A.

11-59-1

CIRCULAR D-10-B
JUNE 1958

WESTON INDUCTION MODULATOR
Model 1408

The Model 1408 Induction Modulator is a unique electronic component designed for the conversion of direct current and potential to a-c potential proportional to the magnitude of the d-c signal. It utilizes the principle of the basic induction galvanometer which has been in extensive previous use as a sensitive d-c/a-c converter. The Model 1408 was designed in cooperation with the Sperry Rand Corporation specifically for airborne service. Conversion is accomplished by means of a d-c movable coil mechanism operating in a coaxial permanent magnet structure equipped with special field coils for introduction of the alternating current flux necessary to the operation of the modulator. Conversion devices, such as vibrators or choppers, operate on the principle of making and breaking of contact to obtain an interrupted signal acceptable to follow-up amplifiers. Deterioration of contact surfaces and vibrating members under severe operating conditions imposed by higher frequency excitation normally result in unpredictable life expectancy. In contrast, the Weston Induction Modulator provides distinct advantages both in service life and versatility of operation by virtue of the elimination of contacting mechanisms. The Induction Modulator also provides the advantages of finite conversion gain, sinusoidal output, and constant impedance to the d-c signal input.

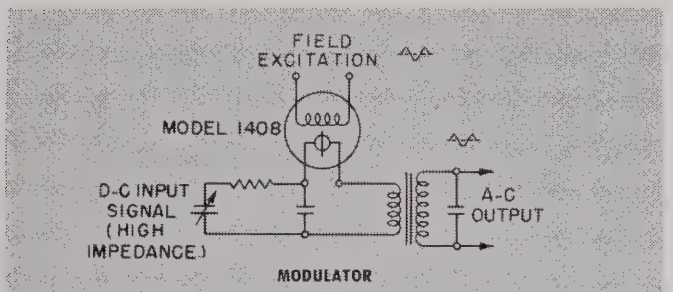

Low Impedance Input . . . Transformer Coupled Output

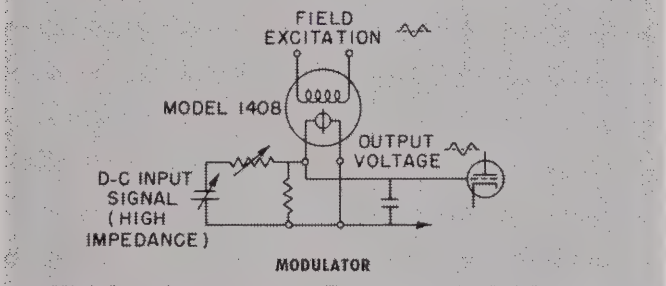

High Impedance Input . . . Resistance Coupled Output

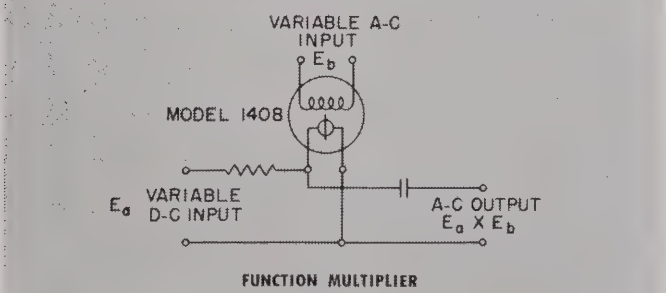

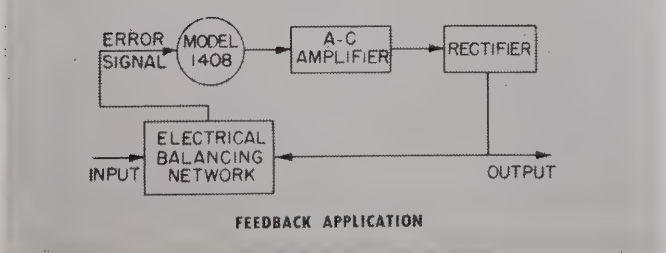

TYPICAL APPLICATIONS AND CIRCUITS

Fixed excitation for linear modulation of direct current into a-c potential . . . as a linear modulator, the output voltage appearing at the movable element terminals is proportional to the d-c signal from the input network or transducer. The circuits shown suggest applications to d-c sources having high and low impedances, generally voltage and current sources respectively.

Signal excitation to resolve the a-c excitation signal and the d-c movable coil signal as a product (function multiplier) . . . operation of the unit as a function multiplier is predicated on the fact that the output voltage is dependent on the magnitudes of the a-c excitation and d-c signal. For example, a decrease of 50 per cent in either signal will result in a corresponding 50 per cent reduction in output. A similar decrease in both input signals simultaneously would decrease the output voltage to 25 per cent of the maximum value.

With extremely low restoring torque on the movable element for use in degenerative feed-back circuits . . . for feed-back applications, the normal restoring springs on the movable element are replaced by low torque filaments exerting minor restraint on the deflection of the coil. Amplification and feed-back through a range determining network or motor driven potentiometer will complete the servo or potentiometric circuit. In such systems, the modulator is extremely sensitive to error signals and resolution in the order of .15 microamperes may be expected.

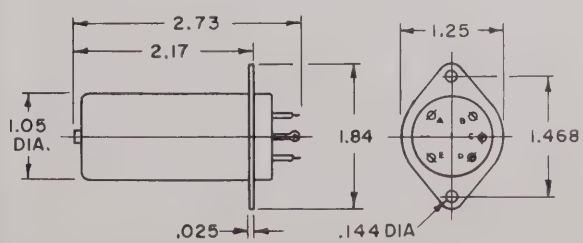

MOVING ELEMENT										FIELD COILS			
Type	Range ±a	Resis. Ohms	Output Volts	Undamped Period Seconds	Linear-ity	Bal-ance	Phase shift Deg.	Gain db (Approx.)	Null Volt-age	Imped-ance Ohms	D-C Resis. Ohms	Power Dissap. (Max.)	Input Volts (Nom.)
1	30-0-30	1245	1.9	0.37	2.5%	1.0%	19	28	1.0%	6500+ J6000	5000	1.25	115
2	50-0-50	485	1.15										
3	120-0-120	100	0.50										
4	150-0-150	50	0.40										
5	300-0-300	17	0.20										
6	*500-0-500	1245	*0.95	0.13	2.5%	1.0%	19	*14	1.0%	6500+ J6000	5000	1.25	115

**With 1245 ohm external shunt resistance across moving element for critical damping*

The tabulation presents characteristic data associated with the Model 1408 including specific data applicable to several standard ranges of Induction Modulators. Induction Modulators designed for other than 115 volt a-c excitation are readily available by change in field coil parameters. The sensitivities and movable coil resistances should be selected to provide an optimum match with the characteristics of transducers or networks with which the modulator may be associated. It is pointed out that the values of impedance, phase shift, et cetera, are typical of 400 cycles per second operation. Excitation at other frequencies from 60 to 1000 cps. is possible with due consideration to the effect of such changes on circuit parameters. The operating frequency should be specified when ordering. Operation at frequencies beyond those specified above can be accommodated by use of special magnetic materials.

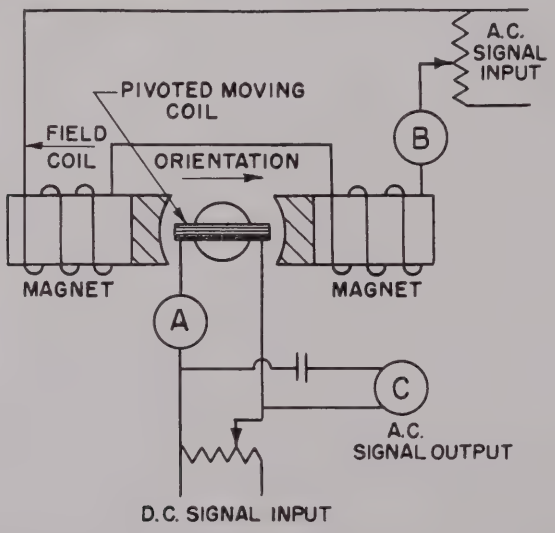

The diagram to the left schematically illustrates the mechanical construction of the Weston Induction Modulator . . . the application of a d-c current to terminals "C" and "D" causes a deflection of the movable element to a position where its winding is linked by the a-c flux resulting from the excitation voltage applied to terminals "A" and "B". The voltage induced in the movable coil is proportional to the coil position and hence to the signal current.

The mechanism assembly consists basically of pole-pieces and a frameless pivoted movable coil assembly. This assembly together with the axially located permanent magnets form the elements of a conventional Weston d-c mechanism. Field coils which provide the a-c excitation are mounted directly on the magnets. The entire assembly is enclosed in a hermetically sealed housing which also completes the magnetic circuit. Electrical connections are made through a hermetically sealed header.

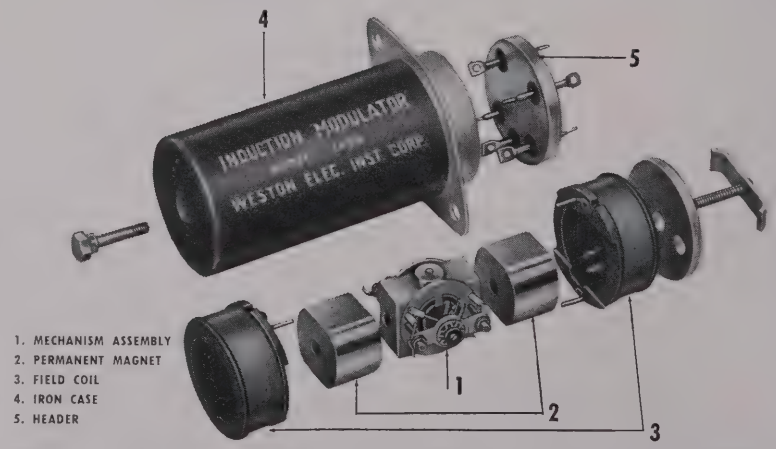

WESTON INSTRUMENTS, DIVISION OF DAYSTROM, INCORPORATED

Newark 12, New Jersey, U.S.A.

Printed in U.S.A.

WESTON

PRICE LIST 02-500

EFFECTIVE NOVEMBER 9, 1959

Induction Modulator

All Prices Subject to Change Without Notice and are F.O.B. Factory, Newark 12, N. J.

MODEL 1408 .....$80.00

s – Normally carried in stock. Do not include "s" in your order write-up.

Daystrom, Incorporated, DAYSTROM – WESTON SALES DIVISION, Newark 12, N. J., U.S.A.

PRINTED IN U.S.A.

11-59-1

02-600-B

ELECTRONIC D-C AMPLIFIER

MODEL 1411

DAYSTROM

Weston Instruments Division, Newark 12, N. J., U. S. A.

WESTON ELECTRONIC D-C AMPLIFIER

MODEL 1411

The Model 1411 D-C Amplifier is essentially an automatic potentiometer type, wherein an output current is maintained in balance against the input potential or current through a network of precision resistors.

The converter, which is the heart of this device, is mechanically similar to the conventional d-c instrument. It consists of a standard Alnico magnet assembly, with the conventional pivoted movable coil structure having torqueless conducting filaments in place of the normally heavy restoring springs employed in d-c instruments. Assembled in the iron pole faces of the magnet assembly are high-frequency powdered iron inserts, which provide a magnetic path for a 200 kc field component. This 200 kc field is injected in parallel to the permanent magnet's flux path. A pair of field coils which form a part of the 200 kc tank circuit for the electronic oscillator section are mounted on the iron pole faces of the magnet assembly. The field coils are supported by means of brass links which serve as one-turn loops for coupling the 200 kc field from the tank coils to the powdered iron inserts.

In operation, the movable coil is at zero balance when it presents zero coupling area to the 200 kc field component. When a d-c input is applied it causes the coil to deflect as in any conventional d-c instrument. Since the coil is no longer at a zero coupling position in respect to the 200 kc field, it then couples by induction to the 200 kc flux. The degree of couple to the 200 kc field is then proportional to the d-c input to the movable coil. From this action the converter has a characteristic gain in the order of 100 million on an energy basis in contrast to some loss in the contact or chopper type of converter.

In practice the movable coil deflects only a few seconds of angle for full amplifier output. This 200 kc potential which has been induced in the movable coil is then abstracted by means of a sharply resonated 200 kc input transformer. The transformer is series-connected with the converter and input range determining network. The secondary of the input transformer then drives a two staged peaked 200 kc amplifier for amplifying the a-c error component picked up by the moving coil.

The second stage of this dual a-c amplification section is electronically connected for regeneration with the oscillator stage for oscillation about a frequency of 200 kc. The frequency of the oscillator is shifted high or low, due to the variable mutual inductance caused by the moving coil coupling to the field coil tank circuit. This causes the oscillator tank circuit to be inductive or capacitive, depending upon the polarity of d-c input to the moving coil.

Coupled in series with the tank circuit of the oscillator plate is a frequency discriminating rectifier with the center frequency adjusted to 200 kc. The discriminator develops 1 milliampere for a frequency shift of approximately 15 kc each side of the center frequency. The d-c output current is then fed back to the input through a range determining network of resistors to complete the potentiometric circuit.

(Continued next page)

WESTON ELECTRONIC D-C AMPLIFIER

provides a precise method for low level measurement and control

The Weston INDUCTRONIC® System of direct current amplification is a precise method for low level measurement. It is particularly suited to industrial and laboratory processes requiring reliability of service, a high degree of stability and sensitivity with extreme accuracy.

Through the use of transducers such as thermocouples, radiation receivers, bolometers, strain gages, pressure transducers, resistance thermometers, photocells, resistance bridges, vacuum thermocouples, ionization gages, related physical quantities can be measured. No periodic calibration is required, as the range determining networks are factory adjusted, which also elimiates the need for amplifier gain controls. The high order of sensitivity and speed of resolution permits many unusual applications which otherwise would be difficult or impractical.

Many adaptations are possible to meet requirements that ordinarily cannot be handled by conventional methods. **Review and comment by Weston engineers on any special requirements are offered without obligation.** Submission of full technical description and circuit details will aid in the solution of specific applications. Complete descriptions and detailed specifications of the particular Inductronic models that are suggested for such specific applications will be provided.

Inductronic equipment is designed and manufactured using highest quality components operated under conservative conditions. The converter and translational devices suffer no normal deterioration and the electrical components are permanent in character. No electrolytic capacitors are used. The life expectancy of this line of equipment is effectively that of the vacuum tubes and with routine tube replacement should be unlimited. The Inductronic system of amplification provides a greater intrinsic independence from variations in the individual tubes and the tube complement is not critical. For replacement purposes only tubes on standard preferred list are needed.

The unique characteristics of this system open up possibilities for a variety of applications.

Applications . . . typical examples of systems in which the Model 1411 has been successfully used.

- Temperature control, allowing precise regulation of baths, ovens, etc. having difficult thermal characteristics.
- Precise automatic standardization of D-C current or voltage by reference against a standard cell; 0.01% is possible.
- RMS a-c regulation using thermal converters or special thermocouples; a resolution of 0.02% is possible.
- Production testing of transistors or other elements whose characteristics change due to heavy burdens of sensitive instruments. The Inductronic system presents no burden.
- Analog computation devices, particularly where functions of integration or differentiation are required.
- High-speed integration of potential or current against time, for measurement of magnetic flux, pulse energy, photographic exposure, welding currents, etc.
- Averaging an indication subject to fluctuation; response-time up to one minute is possible.
- High speed inspection of any resistive element, such as precision resistors and fuses at a rate of better than 1 a second.
- Temperature differential indication in the order of 2°C readable to 0.02°C.
- The use of negative input resistance for barrier type photocells to flatten the photocell output curve to improve photocell linearity.
- Range extension of standardizing instruments with no appreciable loss of accuracy.
- Precision direct wire telemetering, made feasible by ability of Inductronic system to handle high output burden.
- Detection and amplification of minute d-c signal makes possible practical precision expanded scale or suppression by use of standard cell.

WESTON ELECTRONIC D-C AMPLIFIER

MODEL 1411

The Model 1411 D-C Amplifier is essentially an automatic potentiometer type, wherein an output current is maintained in balance against the input potential or current through a network of precision resistors.

The converter, which is the heart of this device, is mechanically similar to the conventional d-c instrument. It consists of a standard Alnico magnet assembly, with the conventional pivoted movable coil structure having torqueless conducting filaments in place of the normally heavy restoring springs employed in d-c instruments. Assembled in the iron pole faces of the magnet assembly are high-frequency powdered iron inserts, which provide a magnetic path for a 200 kc field component. This 200 kc field is injected in parallel to the permanent magnet's flux path. A pair of field coils which form a part of the 200 kc tank circuit for the electronic oscillator section are mounted on the iron pole faces of the magnet assembly. The field coils are supported by means of brass links which serve as one-turn loops for coupling the 200 kc field from the tank coils to the powdered iron inserts.

In operation, the movable coil is at zero balance when it presents zero coupling area to the 200 kc field component. When a d-c input is applied it causes the coil to deflect as in any conventional d-c instrument. Since the coil is no longer at a zero coupling position in respect to the 200 kc field, it then couples by induction to the 200 kc flux. The degree of couple to the 200 kc field is then proportional to the d-c input to the movable coil. From this action the converter has a characteristic gain in the order of 100 million on an energy basis in contrast to some loss in the contact or chopper type of converter.

In practice the movable coil deflects only a few seconds of angle for full amplifier output. This 200 kc potential which has been induced in the movable coil is then abstracted by means of a sharply resonated 200 kc input transformer. The transformer is series-connected with the converter and input range determining network. The secondary of the input transformer then drives a two staged peaked 200 kc amplifier for amplifying the a-c error component picked up by the moving coil.

The second stage of this dual a-c amplification section is electronically connected for regeneration with the oscillator stage for oscillation about a frequency of 200 kc. The frequency of the oscillator is shifted high or low, due to the variable mutual inductance caused by the moving coil coupling to the field coil tank circuit. This causes the oscillator tank circuit to be inductive or capacitive, depending upon the polarity of d-c input to the moving coil.

Coupled in series with the tank circuit of the oscillator plate is a frequency discriminating rectifier with the center frequency adjusted to 200 kc. The discriminator develops 1 milliampere for a frequency shift of approximately 15 kc each side of the center frequency. The d-c output current is then fed back to the input through a range determining network of resistors to complete the potentiometric circuit.

(Continued next page)

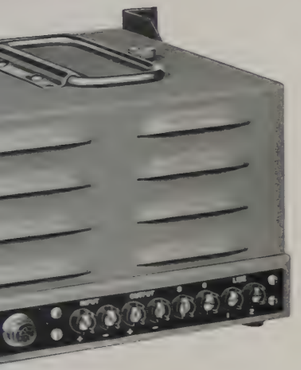

basis in contrast to some loss in the contact or chopper type of converter.

In practice the movable coil deflects only a few seconds of angle for full amplifier output. This 200 kc potential which has been induced in the movable coil is then abstracted by means of a sharply resonated 200 kc input transformer. The transformer is series-connected with the converter and input range determining network. The secondary of the input transformer then drives a two staged peaked 200 kc amplifier for amplifying the a-c error component picked up by the moving coil.

The second stage of this dual a-c amplification section is electronically connected for regeneration with the oscillator stage for oscillation about a frequency of 200 kc. The frequency of the oscillator is shifted high or low, due to the variable mutual inductance caused by the moving coil coupling to the field coil tank circuit. This causes the oscillator tank circuit to be inductive or capacitive, depending upon the polarity of d-c input to the moving coil.

Coupled in series with the tank circuit of the oscillator plate is a frequency discriminating rectifier with the center frequency adjusted to 200 kc. The discriminator develops 1 milliampere for a frequency shift of approximately 15 kc each side of the center frequency. The d-c output current is then fed back to the input through a range determining network of resistors to complete the potentiometric circuit.

(Continued next page)

WESTON ELECTRONIC D-C AMPLIFIER

MODEL 1411 *(Cont'd.)*

Input Conditions

D-c amplifiers as a class are notoriously responsive to input disturbances, and usually require grounding or shielding of the source circuit. The Model 1411, however, is directly sensitive only to disturbances in the neighborhood of the operating frequency of 200 kilocycles; an unlikely occurrence. The input circuit may be grounded or not, as convenient, and when ungrounded is not sensitive to disturbance potentials with respect to ground up to the point of internal breakdown. The input and output circuits are conductively isolated from the internal amplifier circuit.

Output Conditions

A maximum of 5,000 ohms resistance can be tolerated in the discriminator output circuit at a current of 1 milliampere. The system, being of the potentiometer type, demands no energy from the source, except for an extremely small error differential which is transient. The maximum demand in practice is 5 microvolts on current input ranges and 0.1 microampere on potential ranges.

An overall amplifier response of 1/10 second can be realized on the lowest input range and considerably faster on less sensitive ranges. This feature is a result of the high conversion frequency employed. Effects of distortion and amplifier non-linearities within the accuracy of the amplifier are negligible due to the method of potentiometric balance.

Accuracy

The maximum working error is essentially the adjustment tolerance error of the Range Standard (normally 1% of the range), plus the resolution sensitivity of the convertor (stated as 5 microvolts or 0.1 microampere maximum). Range Standards are also available for 0.1% accuracy on higher input ranges. These limits are effective with potential sources having a resistance not larger than the order of the match resistance (50 ohms), and on current inputs having a resistance not smaller than the order of the match resistance. For use with sources having unfavorable source resistance, correspondence is invited as to the accuracy expected on specific ranges.

Specifications

Approx. Size: 9¼" wide x 8½" deep x 6⅛" high, overall.

Approx. Weight: 13 lbs. (5.9 kilograms).

Ranges: Determined by interchangeable plug-in Range Standards, potential or current types; normal minimum ranges for industrial applications, 1 millivolt and 20 microamperes; laboratory service, 100 microvolts and 2 microamperes. Normal maximum ranges, 5 volts and 1 milliampere. Laboratory ranges are susceptive to warm up drift which requires zero to be readjusted.

Input: Maximum current demand on potential ranges, 0.1 microampere; maximum potential demand on current ranges, 5 microvolts; input grounding optional by terminal strip jumper.

Power Requirements: 105-125 volts a-c, 50-1600 cps, approximate 35 watts demand, internally fused for 1 ampere.

Input Match Resistance: 50 ohms approximate. On potential ranges the amplifier balances out the current from the source and presents an effective infinite impedance to the source.

(Continued next page)

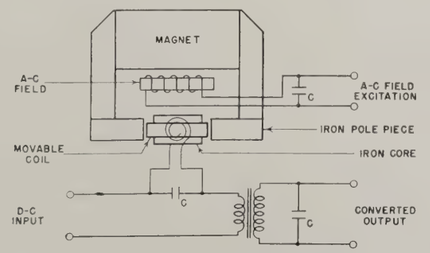

Schematic Diagram of Inductronic Converter

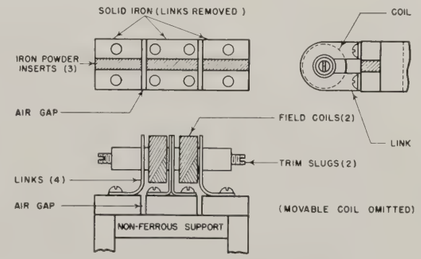

Construction Detail of Converter Pole Pieces

On current the amplifier balances out the potential from the source and presents an effective zero impedance to the source.

Output: Bi-directional, normally 0-1 ma or 500-0-500 microamperes into a maximum output burden of 5000 ohms (5 volts). Open circuited output-potential approximately 50 volts plus or minus, depending upon polarity of input.

Model 1421

Model 1421 D-C Amplifier is available for portable use. Operation on 6, 12 or 24 volts d-c is obtained by use of a self-contained motor generator in place of the conventional a-c power supply system.

Accessory Equipment

Model 9914 External Circuit Plug—A jumper plug replacing the internal Range Standard where external Range Standard connection or special external circuits are required.

Model 9914 Damping Adaptor—A small plug-in unit fitting between the Range Standard and the range standard socket for damping the response where averaging of input fluctuations is desired. The unit contains a small mutual reactor coupling the output to the input circuit, and damps the response by reactive feedback.

TABLE OF SUGGESTED MODEL 9914 RANGE STANDARDS (Higher Ranges on Special Order)

Potential Ranges						Current Ranges			
Microvolts	Part No.	Millivolts	Part No.	Millivolts	Part No.	Microamperes	Part No.	Microamperes	Part No.
*100	D-132936	1.0	132939	20	132943	*2	132946	50	132950
*200	D-132937	2.0	132940	50	132944	*5	132947	100	132951
*500	D-132938	5.0	132941	100	132945	*10	132948	200	132952
		10	132942			20	132949	500	132953

Standard adjustment accuracy 1%. Accuracy to 0.1% (practicable only on ranges of 5mv or 100μa and higher) available at a surcharge.
Range standards also can be provided with negative input resistance to the source.
*Laboratory ranges are susceptive to small warm up thermal drift and heavy vibration.

WARRANTY

Weston products are warranted to be of good workmanship and quality and free from defects in manufacture. Our liability is limited to repairing such defects, providing return is made prepaid to the Service Division, Daystrom, Incorporated, Weston Instruments Division, 2530 Polk St., Union, N. J. within one (1) year after delivery to the original purchaser. We shall not be liable for consequential damages. This warranty is in lieu of all other warranties, guaranties, liabilities or obligations, statutory or implied, to the original purchaser or to any other person.

WESTON INSTRUMENTS DIVISION
Newark 12, N. J.

DISTRICT OFFICES

ALBANY	LOS ANGELES
BOSTON	MILWAUKEE
BUFFALO	NEW ORLEANS
CEDAR RAPIDS	NEW YORK
CHICAGO	PHILADELPHIA
CINCINNATI	ROCHESTER
CLEVELAND	SAN DIEGO
DAYTON	SAN FRANCISCO
DETROIT	SEATTLE
HARRISBURG	SYRACUSE
HOUSTON	UNION (Newark, N. J.)
KNOXVILLE	WASHINGTON, D. C.

REPRESENTATIVES

AMARILLO–Butler and Land
ATLANTA–E. A. Thornwell, Inc.
BALTIMORE–Thomas H. Closs
CHARLOTTE, N. C.–Ranson, Wallace & Company
DALLAS–Butler and Land
DENVER–Peterson Company, Incorporated
JACKSON–Curtis H. Stout, Inc.
JACKSONVILLE–Ward Engineering Co., Inc.
KANSAS CITY, MO.–C. B. Fall Co., Hickman Mills
LITTLE ROCK, ARK.–Curtis H. Stout, Inc.
MEMPHIS–Curtis H. Stout, Inc.
MIDDLETOWN, CONN.–Dittman & Greer, Inc.
MINNEAPOLIS–Pinkney & Hine
ORLANDO, FLA.–Ward Engineering Co., Inc.
PHOENIX–J. E. Redmond Supply Co.
PITTSBURGH–Russell F. Clark Co.
RICHMOND, VA.–Ranson, Wallace & Co.
SHREVEPORT–Curtis H. Stout, Inc.
ST. LOUIS–C. B. Fall Company
TULSA, OKLA.–Riddle and Hubbell Company

CANADA

MONTREAL–Daystrom, Limited
TORONTO–Daystrom, Limited

EXPORT and OVERSEAS

International Sales Division
100 Empire Street
Newark 12, N. J.

Printed in U.S.A. 1-60

WESTON

PRICE LIST 02-600

EFFECTIVE NOVEMBER 9, 1959

Electronic Controls

All Prices Subject to Change Without Notice and are F.O.B. Factory, Newark 12, N. J.

SUPERSEDES 3/59

Model 1411	**Inductronic D-C Amplifier (Includes one selected Range Standard)**	**$434.50s**
Model 1421	**Inductronic D-C Amplifier—Portable type for battery operation (Includes one selected Range Standard)**	**556.50**
Model 1446	**Inductronic Knife-Edge Controller**	**211.75s**
Model 1461	**Inductronic Sensitizing Amplifier (Including external range determining network)**	**539.50s**
Additional Model 9914 Range Standards	**each**	**20.25s**
Surcharge for special accuracy adjustment of Range Standard	**each**	**20.25**
Model 9914	**External Circuit Plug**	**6.75s**
Model 9914	**Damping Adaptor**	**41.75s**

s—Normally carried in stock. Do not include "s" in your order write up!

Daystrom, Incorporated, DAYSTROM-WESTON SALES DIVISION, Newark 12, N. J., U. S. A.

Printed in U.S.A.

11-59-1

ELECTRONIC CONTROLS

D-C Amplifier

Sensitizing Amplifier

Knife-Edge Controller

INDICATE WESTON Instruments RECORD CONTROL SINCE 1888

CATALOG
02-600

WESTON INSTRUMENTS, DIVISION OF DAYSTROM, INCORPORATED, NEWARK 12, N. J., U.S.A.

WESTON ELECTRONIC CONTROLS

The Weston INDUCTRONIC® System of direct current amplification is a precise method for low level measurement and control. It is particularly suited to industrial and laboratory processes requiring reliability of service, a high degree of stability and sensitivity with extreme accuracy.

Through the use of transducers such as thermocouples, radiation receivers, bolometers, strain gages, pressure transducers, resistance thermometers, photocells, resistance bridges, vacuum thermocouples, ionization gages, related physical quantities can be measured and controlled as an automatic process. No periodic calibration is required, as the range determining networks are factory adjusted, which also eliminates the need for amplifier gain controls. The high order of sensitivity and speed of resolution permits many unusual applications which otherwise would be difficult or impractical.

The Model 1411 Inductronic D-C Amplifier is described in greatest detail in this booklet since it is the basic unit. The companion and accessory models to the amplifier briefly described illustrate the versatility of the system. Many adaptations are possible to meet requirements that ordinarily cannot be handled by conventional methods. **Review and comment by Weston engineers on any special requirements are offered without obligation.** Submission of full technical description and circuit details will aid in the solution of specific applications. Complete descriptions and detailed specifications of the particular Inductronic models that are suggested for such specific applications will be provided.

Inductronic equipment is designed and manufactured using highest quality components operated under conservative conditions. The converter and translational devices suffer no normal deterioration and the electrical components are permanent in character. No electrolytic capacitors are used. The life expectancy of this line of equipment is effectively that of the vacuum tubes and with routine tube replacement should be unlimited. The Inductronic system of amplification provides a greater intrinsic independence from variations in the individual tubes and the tube complement is not critical. For replacement purposes only tubes on standard preferred list are needed.

The unique characteristics of this system open up possibilities for a variety of applications.

Applications . . . typical examples of systems in which the model 1411 has been successfully used.

- Temperature control, allowing precise regulation of baths, ovens, etc. having difficult thermal characteristics.
- Precise automatic standardization of D-C current or voltage by reference against a standard cell; 0.01% is possible.
- RMS a-c regulation using thermal converters or special thermocouples; a resolution of 0.02% is possible.
- Production testing of transistors or other elements whose characteristics change due to heavy burdens of sensitive instruments. The Inductronic system presents no burden.
- Analog computation devices, particularly where functions of integration or differentiation are required.
- High-speed integration of potential or current against time, for measurement of magnetic flux, pulse energy, photographic exposure, welding currents, etc.
- Averaging an indication subject to fluctuation; response-time up to one minute is possible.
- High speed inspection of any resistive element, such as precision resistors and fuses at a rate of better than 1 a second.
- Temperature differential indication in the order of 2°C readable to 0.02°C.
- The use of negative input resistance for barrier type photocells to flatten the photocell output curve to improve photocell linearity.
- Range extension of standardizing instruments with no appreciable loss of accuracy.
- Precision direct wire telemetering, made feasible by ability of Inductronic system to handle high output burden.
- Detection and amplification of minute d-c signal makes possible practical precision expanded scale or suppression by use of standard cell.

WESTON ELECTRONIC CONTROLS

D-C AMPLIFIER – MODEL 1411

The Model 1411 D-C Amplifier is essentially an automatic potentiometer type, wherein an output current is maintained in balance against the input potential or current through a network of precision resistors.

The converter, which is the heart of this device, is mechanically similar to the conventional d-c instrument. It consists of a standard Alnico magnet assembly, with the conventional pivoted movable coil structure having torqueless conducting filaments in place of the normally heavy restoring springs employed in d-c instruments. Assembled in the iron pole faces of the magnet assembly are high-frequency powdered iron inserts, which provide a magnetic path for a 200 kc field component. This 200 kc field is injected in parallel to the permanent magnet's flux path. A pair of field coils which form a part of the 200 kc tank circuit for the electronic oscillator section are mounted on the iron pole faces of the magnet assembly. The field coils are supported by means of brass links which serve as one-turn loops for coupling the 200 kc field from the tank coils to the powdered iron inserts.

In operation, the movable coil is at zero balance when it presents zero coupling area to the 200 kc field component. When a d-c input is applied it causes the coil to deflect as in any conventional d-c instrument. Since the coil is no longer at a zero coupling position in respect to the 200 kc field, it then couples by induction to the 200 kc flux. The degree of couple to the 200 kc field is then proportional to the d-c input to the movable coil. From this action the converter has a characteristic gain in the order of 100 million on an energy basis in contrast to some loss in the contact or chopper type of converter.

In practice the movable coil deflects only a few seconds of angle for full amplifier output. This 200 kc potential which has been induced in the movable coil is then abstracted by means of a sharply resonated 200 kc input transformer. The transformer is series-connected with the converter and input range determining network. The secondary of the input transformer then drives a two staged peaked 200 kc amplifier for amplifying the a-c error component picked up by the moving coil.

The second stage of this dual a-c amplification section is electronically connected for regeneration with the oscillator stage for oscillation about a frequency of 200 kc. The frequency of the oscillator is shifted high or low, due to the variable mutual inductance caused by the moving coil coupling to the field coil tank circuit. This causes the oscillator tank circuit to be inductive or capacitive, depending upon the polarity of d-c input to the moving coil.

Coupled in series with the tank circuit of the oscillator plate is a frequency discriminating rectifier with the center frequency adjusted to 200 kc. The discriminator develops 1 milliampere for a frequency shift of approximately 15 kc each side of the center frequency. The d-c output current is then fed back to the input through a range determining network of resistors to complete the potentiometric circuit.

(Continued next page)

WESTON ELECTRONIC CONTROLS

D-C AMPLIFIER – MODEL 1411 *(Cont'd.)*

Input Conditions

D-c amplifiers as a class are notoriously responsive to input disturbances, and usually require grounding or shielding of the source circuit. The Model 1411, however, is directly sensitive only to disturbances in the neighborhood of the operating frequency of 200 kilocycles; an unlikely occurrence. The input circuit may be grounded or not, as convenient, and when ungrounded is not sensitive to disturbance potentials with respect to ground up to the point of internal breakdown. The input and output circuits are conductively isolated from the internal amplifier circuit.

Output Conditions

A maximum of 5,000 ohms resistance can be tolerated in the discriminator output circuit at a current of 1 milliampere. The system, being of the potentiometer type, demands no energy from the source, except for an extremely small error differential which is transient. The maximum demand in practice is 5 microvolts on current input ranges and 0.1 microampere on potential ranges.

An overall amplifier response of 1/10 second can be realized on the lowest input range and considerably faster on less sensitive ranges. This feature is a result of the high conversion frequency employed. Effects of distortion and amplifier non-linearities within the accuracy of the amplifier are negligible due to the method of potentiometric balance.

Accuracy

The maximum working error is essentially the adjustment tolerance error of the Range Standard (normally 1% of the range), plus the resolution sensitivity of the convertor (stated as 5 microvolts or 0.1 microampere maximum). Range Standards are also available for 0.1% accuracy on higher input ranges. These limits are effective with potential sources having a resistance not larger than the order of the match resistance (50 ohms), and on current inputs having a resistance not smaller than the order of the match resistance. For use with sources having unfavorable source resistance, correspondence is invited as to the accuracy expected on specific ranges.

Specifications

Approx. Size: 9¼" wide x 8½" deep x 6⅛" high, overall.

Approx. Weight: 13 lbs. (5.9 kilograms).

Ranges: Determined by interchangeable plug-in Range Standards, potential or current types; normal minimum ranges for industrial applications, 1 millivolt and 20 microamperes; laboratory service, 100 microvolts and 2 microamperes. Normal maximum ranges, 5 volts and 1 milliampere. Laboratory ranges are susceptive to warm up drift which requires zero to be readjusted.

Input: Maximum current demand on potential ranges, 0.1 microampere; maximum potential demand on current ranges, 5 microvolts; input grounding optional by terminal strip jumper.

Power Requirements: 105-125 volts a-c, 50-1600 cps, approximate 35 watts demand, internally fused for 1 ampere. **A Model 1421 for 6 or 12 volt d-c operation is also available for portable use.**

Input Match Resistance: 50 ohms approximate. On potential ranges the amplifier balances out the current from the source and presents an effective infinite impedance to the source.

(Continued next page)

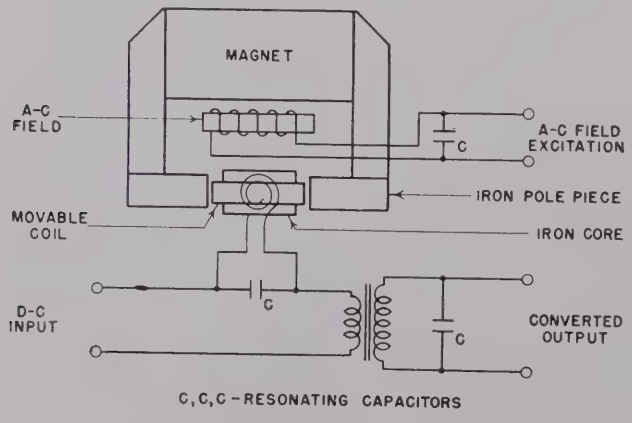

Schematic Diagram of Inductronic Converter

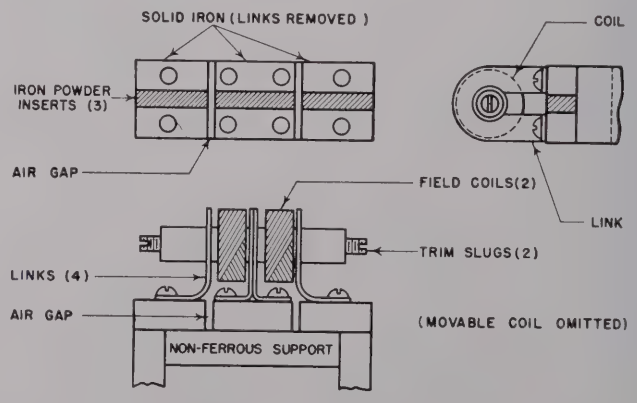

Construction Detail of Converter Pole Pieces

On current the amplifier balances out the potential from the source and presents an effective zero impedance to the source.

Output: Bi-directional, normally 0-1 ma or 500-0-500 microamperes into a maximum output burden of 5000 ohms (5 volts). Open circuited output-potential approximately 50 volts plus or minus, depending upon polarity of input.

Model 1421

Model 1421 D-C Amplifier is available for portable use. Operation on 6, 12 or 24 volts d-c is obtained by use of a self-contained motor generator in place of the conventional a-c power supply system.

Accessory Equipment

Model 9914 External Circuit Plug—A jumper plug replacing the internal Range Standard where external Range Standard connection or special external circuits are required.

Model 9914 Damping Adaptor—A small plug-in unit fitting between the Range Standard and the range standard socket for damping the response where averaging of input fluctuations is desired. The unit contains a small mutual reactor coupling the output to the input circuit, and damps the response by reactive feedback.

TABLE OF SUGGESTED MODEL 9914 RANGE STANDARDS (Higher Ranges on Special Order)

Potential Ranges						*Current Ranges*			
Microvolts	*Part No.*	*Millivolts*	*Part No.*	*Millivolts*	*Part No.*	*Microamperes*	*Part No.*	*Microamperes*	*Part No.*
*100	D-132936	1.0	132939	20	132943	*2	132946	50	132950
*200	D-132937	2.0	132940	50	132944	*5	132947	100	132951
*500	D-132938	5.0	132941	100	132945	*10	132948	200	132952
		10	132942			20	132949	500	132953

Standard adjustment accuracy 1%. Accuracy to 0.1% (practicable only on ranges of 5mv or 100μa and higher) available at a surcharge.
Range standards also can be provided with negative input resistance to the source.
*Laboratory ranges are susceptive to small warm up thermal drift and heavy vibration.

AUXILIARY EQUIPMENT FOR MODEL 1411

Sensitizing Amplifier—Model 1461

The Model 1461 Inductronic Sensitizing Amplifier is an accessory unit for the Model 1411 D-C Amplifier to increase sensitivity and response speed, particularly for very low input ranges.

The combination Model 1411-1461 is capable of operation on ranges where thermal noise becomes very apparent in the amplifier output. In general, it must be considered as limited to laboratory service where environmental disturbances such as temperature changes and vibration are minimized.

The Model 1461 is a conductively coupled, compound-feedback amplifier operated in cascade to the Model 1411 Amplifier but within a closed feedback loop.

The Model 1461 is particularly effective in developing a fast response speed on low ranges. The speed is normally greater than that of the fastest indicating instrument. It is possible to make amplifier-indicating intrument combinations down to ranges as low as 1 microvolt or 0.02 microampere full scale. With a fast instrument on these ranges, thermal noise is apparent as a random fluctuation of about 2 per cent. This is the ultimate limit of any system. However, thermal drift, as distinguished from noise, is still limiting, and such low ranges are only feasible under quite ideal conditions and after careful installation and adjustment.

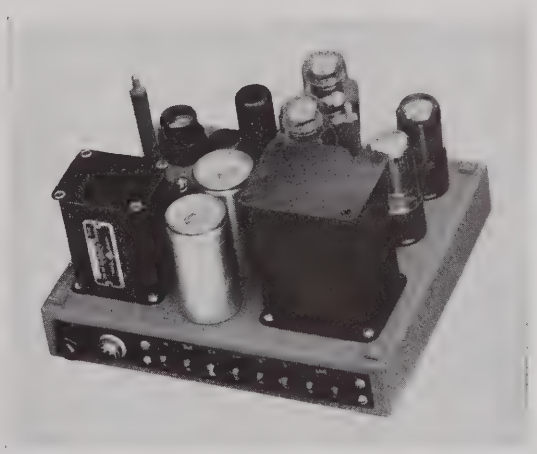

Model 1461 Sensitizing Amplifier — cover removed

Specifications

Approx. Size: 9¼" wide x 8½" deep x 6⅛" high, overall (Same as Model 1411).

Approx. Weight: 12 lbs.

Output Range: (In combination with Model 1411): 1 milliampere, any zero position, into 5000 ohms maximum load resistance.

Power: 105-125 volts a-c, 50-1600 cps, 35 watts demand.

WESTON ELECTRONIC CONTROLS

KNIFE-EDGE CONTROL UNIT – MODEL 1446

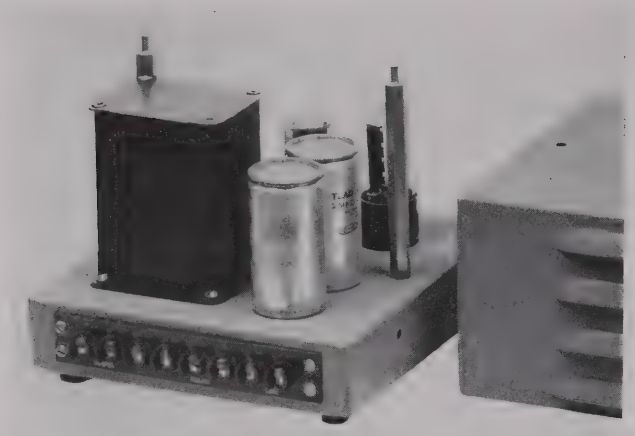

Model 1446 Knife-Edge Control Unit — cover removed

The Model 1446 Knife-Edge Control Unit combines with the Model 1411 Amplifier for use where the highest degree of precision control is desired. Positive high speed operation at an exact control point is obtained by a special Control System employing an exclusive biased diode network. This combination imposes a negligible burden on the sensing element, and yet permits the use of high speed, positive acting, long life mercury wetted relays to handle the controlling current.

The Model 1446 Control Unit is used directly in the output of the Model 1411 Amplifier and provides knife-edge switching action with no dead zone. Due to the biased diode circuit used, positive relay operation is obtained with no inoperative region around the control point and no displacement or drift from that point.

The Model 1411-1446 Control System will detect, amplify and control from minute unbalances developed from bridge, differential and bucking networks. Control is feasible down to the resolution sensitivity of the Model 1411 Amplifier, which is 5 microvolts or 0.1 microamperes.

Specifications

Approx. Size: 7¼" x 8½" x 6⅛".

Approx. Weight: 10 pounds.

Power Requirements: 105-125 volts a-c, 50-1600 cps, 25 watts demand internally fused for 1 ampere.

Switching Load: SPST Relay Contact Rating. Maximum 250 va. Maximum Current 5 amperes. Fused for 5 amperes.

Response Speed: 0.1 sec. or better.

WARRANTY

Weston products are warranted to be of good workmanship and quality and free from defects in manufacture. Our liability is limited to repairing such defects, providing return is made prepaid to the Service Division, Weston Instruments, Division of Daystrom, Inc., Newark 12, N. J., within one (1) year after delivery to the original purchaser. We shall not be liable for consequential damages. This warranty is in lieu of all other warranties, guaranties, liabilities or obligations, statutory or implied, to the original purchaser or to any other person.

. . . WORLD WIDE SALES SERVICE . . .

The facilities listed below are staffed by instrument specialists, whose technical knowledge of Weston products aids them in rendering prompt and efficient service. They will welcome the opportunity to be of assistance to you. Through them, the Weston Engineering Staff, which has had wide and diversified experience in the development, manufacture, and application of instruments, is at your disposal. Outside the United States these services will be carried on by Daystrom Subsidiary Companies and Daystrom International Distributors.

WESTON DISTRICT OFFICES

ALBANY—5 Herbert Drive, Latham, N. Y.....STate 5-5161
BOSTON—66 Central St., Wellesley 81, Mass.....CEdar 5-4300
BUFFALO 26—4446 Main St.....CIrcle 3355
CHICAGO 6—Room 1222, 205 W. Wacker Dr.....FRanklin 2-4656
CINCINNATI 37—7613 Reading Road.....VAlley 1-9105
CLEVELAND 28—3951 Lee Road.....SKyline 2-3030
DAYTON 2—11 W. Monument Avenue.....BAldwin 2-8164
DETROIT 21—16607 James Couzens Highway.....DIamond 1-2121
HARRISBURG—1511 North Front St.....CEdar 8-4276
HOUSTON 27—3405 Mercer.....JAckson 6-4115
KNOXVILLE 21, TENN.—2917 Sanderson Rd.....KNoxville 5-5632
LOS ANGELES 7—2001 South Grand Ave.....RIchmond 9-2361
MILWAUKEE 3—617 No. 2nd St., Room 904.....BRoadway 2-1538
NEWARK—Route 22 and Caldwell Ave., Union, N. J. MUrdock 8-2020
NEW YORK 7—Room 1775, 50 Church St.....WOrth 4-3510
PHILADELPHIA 4—101 N. 33rd St.....BAring 2-6458—6443—6444
ROCHESTER 4—207 Burke Building, 5 Saint Paul St...BAker 5-9546
SAN DIEGO—4455 Miramar Rd., La Jolla, Calif...GLencourt 4-0421
SAN FRANCISCO 3—147 10th St.....UNderhill 3-4250
SYRACUSE—4308 E. Genesee St., DeWitt 14, N. Y.....GIbson 6-4330
WASHINGTON 4, D. C.—429 Pennsylvania Building
425 13th Street, N. W.....DIstrict 7-3636

WESTON REPRESENTATIVES

AMARILLO—Butler and Land....1505 W. Tenth St.—DRake 6-5255
ATLANTA 18—E. A. Thornwell, Inc.
1537 Howell Mill Road, N. W.—TRinity 5-7895
BALTIMORE—Thomas H. Closs
21 W. Pennsylvania Ave., Towson 4, Md.—VAlley 5-4445
CHARLOTTE 2, N. C.—Ranson, Wallace & Company
116½ E. 4th St.—EDison 4-4244
DALLAS 5—Butler and Land.....5538 Dyer St.—EMerson 1-6631
DENVER 16—Peterson Company, Inc.
4949 Colorado Blvd.—DExter 3-5434
JACKSON—Curtis H. Stout, Inc.
706 Electric Bldg.—JAckson 4-4326
JACKSONVILLE—Ward Engineering Co., Inc.
2727 Phyllis St.—EVergreen 8-7656
KANSAS CITY—C. B. Fall Co.
11410 Richmond Ave., Hickman Mills 34, Mo.—SOuth 1-6545
LITTLE ROCK, ARK.—Curtis H. Stout, Inc.
400 Shall St., P. O. Box 107—FRanklin 4-8201
MEMPHIS—Curtis H. Stout, Inc.
718 M & M Bldg.—JAckson 6-7601
MIDDLETOWN, CONN.—Dittman & Greer, Inc.
33 Pleasant St.—DIamond 6-9606
MINNEAPOLIS 3—Pinkney & Hine
1925 Nicollet Ave.—FEderal 8-0523
NEW ORLEANS 12—W. J. Keller
415 Natchez St.—MAgnolia 3603-4
ORLANDO—Ward Engineering Co., Inc.
1015 W. Central Ave.—GArden 2-4295, 3-9721
PHOENIX—J. E. Redmond Supply Co.
625 W. Madison St., P. O. Drawer 869—ALpine 4-8471
PITTSBURGH 22—Russell F. Clark Co.
1409 Clark Bldg.—ATlantic 1-8089, 1-8090
RICHMOND 26, VA.—Ranson, Wallace & Co.
P. O. Box 8762, West Hampton Station—ATlantic 8-8758
SEATTLE 99—Eicher & Co.
5 West Harrison St., P. O. Box 9054—ATwater 4-1811
SHREVEPORT—Curtis H. Stout, Inc.
334 Ricou-Brewster Bldg.—SHreveport 5-5485
ST. LOUIS 1—C. B. Fall Co.
317 N. 11th St., Suite 1001—CHestnut 1-2433
TULSA 1, OKLA.—Riddle and Hubbell Company
302 S. Cheyenne Ave., P. O. Box 727—LUther 5-5624

DAYSTROM SUBSIDIARY COMPANIES

CANADA—Daystrom Limited
TORONTO 19, ONT.....840 Caledonia Road
MONTREAL 9, P.Q.....5430 Ferrier Street
ENGLAND—Daystrom Ltd., Glevum Hall, Southgate St., Gloucester
GERMANY—Daystrom Elektro Gmbh.
Friedenstrasse 10 Frankfurt, Main
SWITZERLAND—Daystrom Overseas Ltd.....13 Rue Ceard, Geneva

DAYSTROM INTERNATIONAL DISTRIBUTORS

ARGENTINA—Compania Standard Electric Argentina, S.A.
Calle Uruguay 1037 Buenos Aires
BELGIUM—M.B.L.E.....80 Rue Des Deux Gares, Brussels, Belgium
BELGIAN CONGO—M.B.L.E.—Congo, Stanleyville, Bakavu,
Leopoldville, Elisabethville
BRAZIL—Standard Electrica, S. A.,
Avenida Rio Branco, 99 4° Andar, Rio de Janeiro
Standard Electrica, S. A.; Av. Ipiranga 1248, Sao Paulo
BURMA—Trading Co.....36, Barr St., Rangoon
CENTRAL AMERICA—Costa Rica, Nicaragua, Guatemala,
El Salvador, and Honduras,
International Standard Electric Corporation,
50 Church Street, New York 7, New York
CHILE—Cia. Standard Electric, S.A.C.,
Vicuna MacKenna 3939, Santiago
COLOMBIA—C. E. Halaby & Co., Ltd.....Bogota & Medellin
CUBA—Antiga Co. S. A.....Obispo No. 153, Havana
Homer W. Parker.....Amenidad 72, Havana
DENMARK—Semler & Matthiassen..Teglvaerksgade 22, Copenhagen
DOMINICAN REPUBLIC—Dalmau Santos C. por A.
Palo Hincado No. 45, Ciudad Trujillo
EGYPT—The General Company For Pharmaceuticals, SAE,
Branch Amon, 147, Mohamed Bey Farid Street, Cairo
FINLAND—Oy Stromberg Ab.....Helsinki
FRANCE—Ets. Radiophon.....50, Rue du Fg. Poissonniere, Paris 10e
HOLLAND—Hulsewe Ingenieursbureau
Rokin 65-67, Amsterdam-C.
ITALY—Ing. S. & Dr. Guido Belotti
Piazza Trento 8, Milan (718)
S. I. M. E. R. a.r.l.....8 Piazza Duca d'Aosta, Milan
JAPAN—Nippon Electric Co. Ltd.
2 Shiba Mita Shikoku-Machi, Minato-Ku, Tokyo
MEXICO—Dalma Comercial, S. A.,
Plaza Santos Degollado 10-104, Mexico 1, D. F.
Servo Mex, S.A.....Oaxaca 28-601 Mexico 7, D. F.
NETHERLANDS ANTILLES—Interconti N.V.
% Lindeteves Central Amerika N.V. P.O. Box 272, Curacao
NEW ZEALAND—Standard Telephones and Cables (Pty.) Limited,
64 Dixon Street, Wellington
NORWAY—Maskin-Aktieselskapet Zeta
Drammensveien 26, Oslo 22
PAKISTAN—Lindeteves (Pakistan) Ltd.
El Markaz Bldg., Bunder Rd., Karachi
PERU—Elecsa, S.A.....Jiron Cuzco No. 410, Apartado 42, Lima
PHILIPPINES—F. J. Olizon.....223-224 May Building, Manila
New York Office—Brannin and Kelly, 551 Fifth Avenue,
New York 17, New York
PORTUGAL—Standard Electric, S.A.R.L...Avenida Da India, Lisbon
PUERTO RICO—Mera Corporation..Post Office Box 9157, Santurce
Badrena & Perez, Inc.....Carpenter Rd., Hato Ray
SOUTH AFRICA—Hubert Davies and Company Limited,
Hudaco House, 7, Rissik Street, Johannesburg
SPAIN—Standard Electrica, S.A...Calle Ramirez de Prado, 7, Madrid
SURINAM—Lindeteves (Zuid Amerika), N.V.
Gravenstraat 40, Paramaribo
SWEDEN—Aktiebolaget Zander and Ingestrom
Fredsgatan 4, Stockholm 16
THAILAND—The International Engineering Company, Limited
Chartered Bank Lane, Bangkok
TURKEY—Helios, Posta Kutusu: 400.....Galata, Istanbul
VENEZUELA—Bauer & Rudolf C. A., Edificio Manhattan, Esquina
De Cuji, Oficina No. 802, Caracas
Centro Tecnica: Edificio Pompei, Avenida Nueva
Granada, Caracas

Inquiries from countries not listed above may be directed to

DAYSTROM INTERNATIONAL, 100 Empire Street, Newark 12, N. J.—BIgelow 8-2141

WESTON

Printed in U.S.A. 2-59

THE WESTON

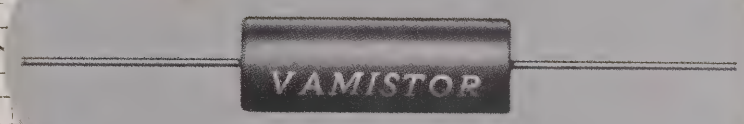

A Precision Metal Film Resistor . . .
with Outstanding Design Characteristics

Now Available in ¼, ½ and 1 Watt Ratings

THE WESTON VAMISTOR®

CONSTRUCTION DIAGRAM

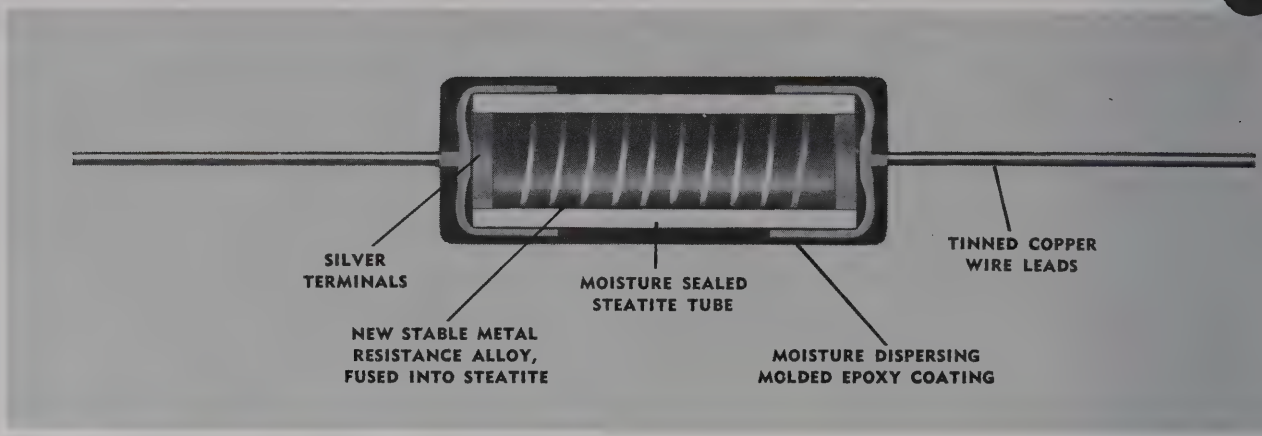
SILVER TERMINALS
NEW STABLE METAL RESISTANCE ALLOY, FUSED INTO STEATITE
MOISTURE SEALED STEATITE TUBE
MOISTURE DISPERSING MOLDED EPOXY COATING
TINNED COPPER WIRE LEADS

The Weston Vamistor is a radical departure from conventional wire wound and film type resistors. Although it embraces the best features of each type and meets the most stringent requirements of MIL-R-93A covering accurate wire wound resistors, it uses no wire.

Many forms of resistor units have appeared using resistance film such as noble metals, deposited carbon, boron carbon, etc., but in each instance they have lacked certain characteristics that prevented them from actually becoming alternates for wire wounds.

Weston has long sought the solution to this problem primarily for use in their own precision instruments. Several years of research have finally produced the first real alternate for the wire wound resistor . . . the Weston precision metal film Vamistor!

A NEW RESISTANCE ELEMENT

The Vamistor is a new type of metal film precision resistor in which the resistance element, actually a ribbon of metal, is thermally fused to the inside wall of a Steatite tube having silver terminals fired to each end. Plated brass terminal caps with tinned copper wire leads are attached to the silvered ends of the tube and the entire unit molded in epoxy resin to protect the resistance element.

The resistance element is a new alloy of the nickel chromium family, developed by Weston, which provides high stability and low temperature coefficient.

Unlike other metal film resistors which have the resistance element deposited on the outer surface of the tube, in the Vamistor the alloy is actually fused into the inner surface by a new electrothermal technique which creates a glass-hard embedded resistance element that will withstand abrasion, thermal shock, and voltage surges to a greater extent than any ordinary film type.

TYPES*	RATING	RESISTANCE VALUE	TEMPERATURE COEFFICIENT
Model 9851 ±1%	½ watt at 85C	250 ohms - 1 megohm	±50 ppm maximum
Model 9852 ±1%	½ watt at 125C	250 ohms - 1 megohm	±50 ppm maximum
Model 9853 ±1%	1 watt at 70C	250 ohms - 1 megohm	±50 ppm maximum
Model 9854 ±1%	½ watt at 150C	250 ohms - 1 megohm	±50 ppm maximum
Model 9855 ±1%	¼ watt at 125C	250 ohms - 500K	±50 ppm maximum

*Available in ±5%, ±.5% or ±.25 initial tolerances as well as with a guaranteed TC of ±25 ppm maximum.

TEMPERATURE COEFFICIENT

Does not exceed 50 ppm per degree C, which is lower than Nichrome wire. Selected Weston precision metal film resistors are available with a maximum of 25 ppm per degree C, which is comparable to Manganin and other special low temperature coefficient alloys. Unlike other film types these temperature coefficients do not vary over the resistance range.

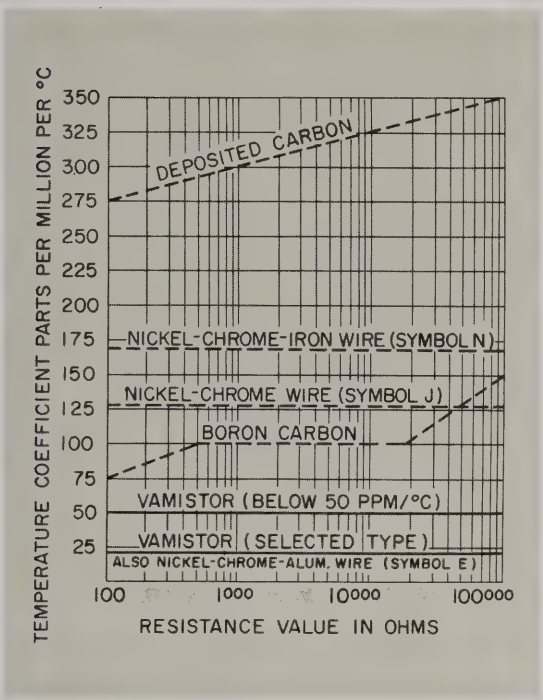

Resistivity vs. Temperature Coefficient

VOLTAGE COEFFICIENT

Maximum minus 5 parts per million per volt.

INDUCTANCE — CAPACITANCE

The Vamistor is substantially non-inductive. Only capacitative reactance shows up at the highest frequencies, due to a distributed capacitance of 0.9 micromicrofarads. This effect can only be of consequence in the most critical circuits. Accordingly, the Weston precision metal film resistor offers considerable advantage over all other existing resistors.

NUCLEAR RADIATION EFFECTS

Units have been irradiated in a continuous reactor run at varying power and were monitored for resistance change. For an integrated flux of 1.4×10^{14} epicadmium neutrons per square centimeter the maximum change in resistance for any Vamistor tested was —0.20%.

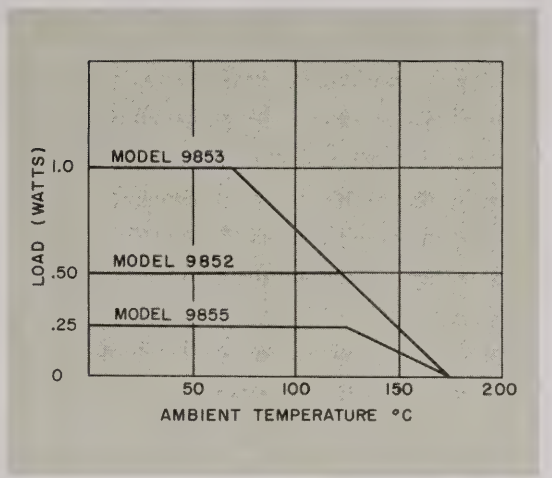

Approximate Derating Curve

NOISE

Fully equivalent to virtually noise-free performance of wire wound resistors. (For 50 volt d-c input, noise level is minus 200 db.)

VOLTAGE RATING

Maximum continuous rated voltage — 500 volts for Models 9851, 2, 3, 4; 350 volts for Model 9855.

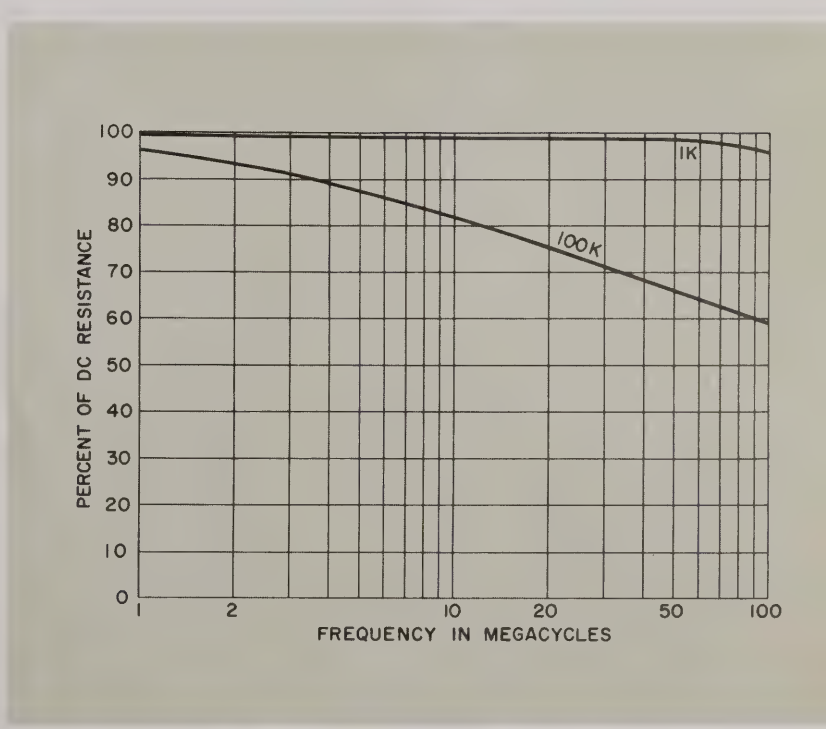

Approximate Frequency Characteristics

SPECIFICATIONS • PERFORMANCE

WESTON VAMISTOR PERFORMANCE DATA
COMPARED WITH SPECIFICATIONS FOR OTHER PRECISION TYPE RESISTORS

Characteristic	Vamistor Model 9851 Deviation from original value of production made units.	MIL-R-19074A (ships) Style RI-94	Wirewound MIL-R-93A Style RB-52 Char. A	Film MIL-R-10509B Style RN-70 Char. A
Short Time Overload 5 Times Watts—10 Sec.	Average .01% Low .00% High .02%	.5% max.	.5% max.	.75% max.*
Load Life 1000 hr—85 C	Average .04% Low .02% High .14%	.5% max.	.5% max.	1.0% max.**
Low Temperature –65 C—24 hours	Average .00% Low .00% High .02%	.5% max.	(no test)	1.0% max.
Moisture Resistance MIL-STD-202, Method 106	Average .02% Low .01% High .05%	.5% max.	1.0% max.	3.0% max.
Salt Water Immersion 0 to 85 C—5 cycles	Average .02% Low .00% High .07%	.5% max.	.5% max.***	(no test)
Temperature Cycle –55 to 85 C—5 cycles	Average .01% Low .00% High .03%	.2% max.	.2% max.	1.0% max.
Insulation Resistance 100 v d-c	Greater than 10,000 megohms—all samples	100 megohms min.	50 megohms min.	10,000 megohms min.
Dielectric Strength 900 v rms—1 minute	Average .00% Low .00% High .01%	.05% max.	.05% max.	.5% max.
Terminal Strength	Average .03% Low .00% High .18%	.5% max.	(no limit)	.5% max.
Effect of Solder	Average .01% Low .00% High .02%	.5% max.	(no test)	.5% max.

*MIL-R-10509B test 2.5 times voltage—5 seconds

**MIL-R-10509B test at 70 C ambient

***MIL-R-93A test not cycled. 25 C—24 hours

EXCEEDS MILITARY and CIVILIAN SPECIFICATIONS

The Vamistor not only meets all known military and civilian specifications pertaining to film type resistors, but also is the first non-wire wound resistor to meet, or surpass, requirements of MIL-R-93A covering precision wire wound resistors. Weston precision metal film resistors surpass MIL-R-93A specifications in being of a smaller size and operating at higher ambient temperatures, and also exceed several stability requirements as indicated in the comparison table.

These resistors also surpass requirements of the upgraded MIL-R-19074A (ships) specification and the proposed MIL-R-10509C film specification. (New characteristic for metal film resistors.) They will operate wherever wire wound or film resistors are specified, providing greater stability under most conditions than either type.

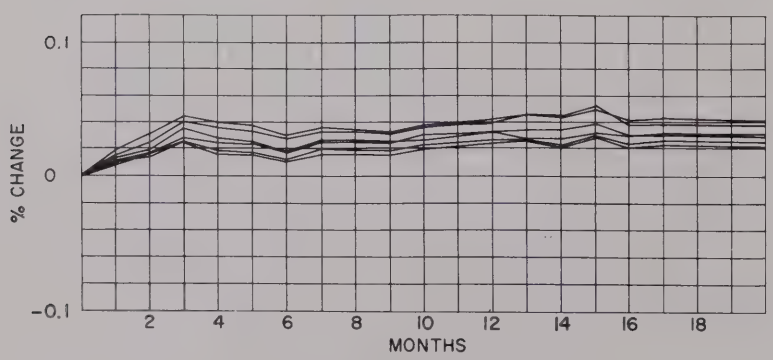

Typical Shelf Life Drift Data

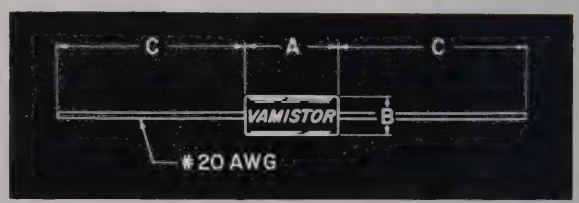

	A	B	C
MODEL 9851-2-3-4	0.866 $^{+.000}_{-.031}$	0.312 $^{+.010}_{-.005}$	1.500 ±.062
MODEL 9855	0.650 $^{+.000}_{-.030}$	0.235 $^{+.010}_{-.005}$	1.450 ±.015

WESTON INSTRUMENTS

DIVISION OF DAYSTROM, INCORPORATED

04-100A 10-59

NEWARK 12, N. J., U.S.A.

PRINTED IN U.S.A.

DAYSTROM

PRICE LIST 04-101

EFFECTIVE DECEMBER, 1959

WESTON VAMISTORS

All Prices are Net and Subject to Change Without Notice and are F.O.B. Factory, Newark 12, N.J.

MODEL 9855-2, ACCURACY ± 1%, TYPE (RN 65) (RI 92)

RANGE	TEMPERATURE COEFFICIENT	1-24	25-99	100-249	250-499	500-999	1000-4999	5000-9999	10,000 UP
100 Ohms to 200K	±25 PPM	$3.05	$2.15	$1.65	$1.60	$1.50	$1.40	$1.35	$1.30
201K to 500K	Per	3.25	2.30	1.70	1.65	1.60	1.45	1.40	1.35
501K to 1 Meg	Degree	3.40	2.40	1.75	1.70	1.65	1.50	1.45	1.40
1.1 Meg to 1.5 Meg	C	3.55	2.55	1.80	1.75	1.70	1.55	1.50	1.45
100 Ohms to 200K	±50 PPM	2.20	1.60	1.25	1.05	.95	.92	.90	.85
201K to 1 Meg	Per	2.40	1.75	1.40	1.15	1.05	1.00	.97	.95
1.1 Meg to 1.5 Meg	Degree C	2.60	1.90	1.55	1.25	1.15	1.10	1.05	1.00

Rating: 1/4 Watt at 125°C, 1/2 Watt at 100°C.

MODEL 9855-4, ACCURACY ± 1%, TYPE (RN 65) (RI 92)

100 Ohms to 200K	±25 PPM	$3.35	$2.35	$1.80	$1.75	$1.65	$1.55	$1.50	$1.45
201K to 500K	Per	3.55	2.55	1.85	1.80	1.75	1.60	1.55	1.50
501K to 1 Meg	Degree	3.75	2.65	1.90	1.85	1.80	1.65	1.60	1.55
1.1 Meg to 1.5 Meg	C	3.90	2.80	2.00	1.90	1.85	1.70	1.65	1.60
100 Ohms to 200K	±50 PPM	2.40	1.75	1.35	1.15	1.05	1.01	.99	.95
201K to 1 Meg	Per	2.65	1.90	1.55	1.25	1.15	1.10	1.07	1.05
1.1 Meg to 1.5 Meg	Degree C	2.85	2.10	1.70	1.35	1.25	1.20	1.15	1.10

Rating: 1/4 Watt at 150°C, 1/2 Watt at 125°C, 1 Watt at 100°C.

MODEL 9852, ACCURACY ± 1%, TYPE (RN 70) (RI 94)

100 Ohms to 500K	±25 PPM	$3.00	$2.15	$1.60	$1.55	$1.50	$1.35	$1.30	$1.25
501K to 1 Meg	Per	3.10	2.20	1.70	1.60	1.55	1.40	1.35	1.30
1.1 Meg to 1.5 Meg	Degree	3.40	2.40	1.85	1.80	1.75	1.60	1.55	1.50
1.6 to 2.5 Meg	C	6.35	5.85	5.60	4.85	4.65	4.10	4.00	3.85
2.6 to 5 Meg		8.35	8.30	8.25	8.20	8.15	8.10	8.05	8.00
100 Ohms to 500K	±50 PPM	2.00	1.45	1.15	.95	.85	.83	.80	.75
501K to 1.5 Meg	Per	2.20	1.55	1.25	1.05	.95	.90	.88	.85
1.6 to 2.5 Meg	Degree	4.50	4.00	3.75	3.00	2.75	2.25	2.15	2.00
2.6 to 5 Meg	C	5.75	5.70	5.65	5.60	5.55	5.50	5.45	5.40

Rating: 1/2 Watt at 125°C, 1 Watt at 100°C, 2 Watts at 70°C, 3 Watts at 40°C.

MODEL 9854, ACCURACY ± 1%, TYPE (RN 70) (RI 94)

100 Ohms to 500K	±25 PPM	$3.30	$2.35	$1.75	$1.70	$1.65	$1.50	$1.45	$1.40
501K to 1 Meg	Per	3.40	2.40	1.85	1.75	1.70	1.55	1.50	1.45
1.1 Meg to 1.5 Meg	Degree	3.75	2.65	2.05	2.00	1.90	1.75	1.70	1.65
1.6 to 2.5 Meg	C	6.95	6.45	6.15	5.35	5.05	4.50	4.40	4.25
2.6 to 5 Meg		9.15	9.10	9.05	9.00	8.95	8.90	8.85	8.80
100 Ohms to 500K	±50 PPM	2.20	1.60	1.25	1.05	.95	.93	.90	.85
501K to 1.5 Meg	Per	2.40	1.70	1.35	1.15	1.05	1.00	.97	.95
1.6 to 2.5 Meg	Degree	4.95	4.40	4.10	3.30	3.00	2.45	2.35	2.20
2.6 to 5 Meg	C	6.30	6.25	6.20	6.15	6.10	6.05	6.00	5.95

Rating: 1/2 Watt at 150°C, 1 Watt at 125°C, 2 Watts at 100°C, 3 Watts at 70°C, 4 Watts at 40°C.

MODEL 9850-2, ACCURACY ± 1%, TYPE (RN 75) (RI 96)

RANGE	TEMPERATURE COEFFICIENT	1-24	25-99	100-249	250-499	500-999	1000-4999	5000-9999	10,000-UP
100 Ohms to 500K	±25 PPM	$3.75	$2.65	$2.00	$1.90	$1.70	$1.65	$1.60	$1.55
501K to 2 Meg	Per	4.00	2.80	2.10	2.00	1.80	1.70	1.65	1.60
2.1 Meg to 4 Meg	Degree	4.25	2.95	2.20	2.10	1.90	1.85	1.80	1.75
4.1 Meg to 5 Meg	C	4.75	4.25	3.75	3.25	2.75	2.25	2.15	2.00
100 Ohms to 500K	±50 PPM	2.25	1.70	1.25	1.05	1.00	.95	.92	.90
501K to 4 Meg	Per	2.50	1.90	1.35	1.15	1.05	1.03	1.00	.95
4.1 Meg to 5 Meg	Degree C	3.00	2.65	2.40	1.90	1.65	1.40	1.15	1.00

Rating: 1 Watt at 125°C, 2 Watts at 100°C, 3 Watts at 70°C, 4 Watts at 40°C.

MODEL 9850-4, ACCURACY ± 1%, TYPE (RN 75) (RI 96)

100 Ohms to 500K	±25 PPM	$4.10	$2.90	$2.20	$2.10	$1.85	$1.80	$1.75	$1.70
501K to 2 Meg	Per	4.40	3.10	2.30	2.20	2.00	1.85	1.80	1.75
2.1 Meg to 4 Meg	Degree	4.65	3.25	2.40	2.30	2.10	2.05	2.00	1.90
4.1 Meg to 5 Meg	C	5.20	4.65	4.10	3.55	3.00	2.45	2.35	2.20
100 Ohms to 500K	±50 PPM	2.45	1.85	1.35	1.15	1.10	1.05	1.01	.99
501K to 4.0 Meg	Per	2.75	2.10	1.50	1.25	1.15	1.13	1.10	1.05
4.1 Meg to 5 Meg	Degree C	3.30	2.90	2.65	2.10	1.80	1.55	1.25	1.10

Rating: 1 Watt at 150°C, 2 Watts at 125°C, 4 Watts at 100°C, 6 Watts at 70°C, 8 Watts at 40°C.

MODEL 9849-2, ACCURACY ± 1%,

100 Ohms to 600K	±25 PPM	$4.60	$3.20	$2.45	$2.35	$2.25	$2.15	$2.10	$2.05
601K to 5 Meg	Per	5.00	3.40	2.75	2.65	2.50	2.30	2.25	2.20
5.1 Meg to 10 Meg	Degree C	5.45	4.00	3.05	2.95	2.80	2.50	2.45	2.40
100 Ohms to 600K	±50 PPM	2.80	1.95	1.55	1.35	1.20	1.15	1.12	1.10
601K to 10 Meg	Per	3.10	2.15	1.70	1.45	1.35	1.25	1.22	1.20
	Degree C								

Rating: 2 Watts at 125°C, 4 Watts at 100°C, 6 Watts at 70°C, 8 Watts at 40°C.

MODEL 9849-4, ACCURACY ± 1%,

100 Ohms to 600K	±25 PPM	$5.05	$3.50	$2.70	$2.60	$2.45	$2.35	$2.30	$2.25
601K to 5 Meg	Per	5.50	3.75	3.00	2.90	2.75	2.55	2.50	2.40
5.1 Meg to 10 Meg	Degree C	6.00	4.40	3.35	3.25	3.10	2.75	2.70	2.65
100 Ohms to 600K	±50 PPM	3.10	2.15	1.70	1.50	1.30	1.25	1.23	1.20
601K to 10 Meg	Per	3.40	2.35	1.85	1.60	1.50	1.35	1.33	1.30
	Degree C								

Rating: 2 Watts at 150°C, 4 Watts at 125°C, 8 Watts at 100°C, 12 Watts at 70°C, 16 Watts at 40°C.

SPECIAL FEATURES

FEATURE	ADD TO PRICE
Plus or Minus .5% Accuracy	$ .50
Plus or Minus .25% Accuracy	1.00
Plus or Minus .1% Accuracy	2.00

Minimum Order Charge is .. $10.00
Minimum Item Charge is 5.00

Government inspection charge is $1.00 per thousand pieces. Minimum charge for government inspection is $2.50. Charge for each additional shipping destination on an order is $2.50.

DAYSTROM, INCORPORATED, Weston Instruments Division, Newark 12, N. J., U. S. A.

PRINTED IN U.S.A.

LABORATORY STANDARD INSTRUMENTS

A-C and D-C Voltmeters

A-C and D-C Ammeters

Wattmeters

Portable Precision Shunts

Standard Cells

INDICATE WESTON Instruments SINCE 1888 RECORD CONTROL

CATALOG
A-46-C

WESTON INSTRUMENTS, DIVISION OF DAYSTROM, INCORPORATED, NEWARK 12, N. J., U.S.A.

GENERAL

Electrical measuring instruments of the laboratory standard classification for direct and alternating current measurements represent the ultimate in indicating instrument precision. Direct reading, convenient and simple to operate, they are widely used as primary standards for instrument checking and maintenance, and when any electrical measurements must be made to a high degree of accuracy. For alternating current, at commercial frequencies, laboratory standards provide a practical means of reference to the standard cell — the basic standard of electrical measurement.

Weston Models 325 and 326 are precision-built to meet the most exacting service requirements. They are extensively used as primary indicating instrument standards in public utility laboratories, standardizing agencies, and in research and educational institutions throughout the world. The relative importance of responsiveness, damping factor, high torque, temperature effect, sustained operating influence and wave form error in a-c instruments, have been evaluated and engineered to an overall balanced design.

Rated accuracy is 0.1% of full scale value. The scales are hand-drawn into 100 or 150 major divisions, as required, with each division subdivided into fifths for maximum accuracy of reading. Designed for use in a horizontal position, these instruments are provided with a spirit level, leveling screws and a zero corrector to aid in obtaining accurate measurements.

For definitions of terms used and other detailed information reference may be made to American Standards Association standard for Electrical Indicating Instruments C39.1-1955.

WARRANTY

Weston products are warranted to be of good workmanship and quality and free from defects in manufacture. Our liability is limited to repairing such defects, provided they are returned prepaid to the Service Division, Weston Instruments, Division of Daystrom, Inc., Newark 12, N. J., within one (1) year after delivery to the original purchaser. We shall not be liable for consequential damages. This warranty is in lieu of all other warranties, guaranties, liabilities or obligations, statutory or implied, to the original purchaser or to any other person.

PORTABLE PRECISION SHUNTS

Intended for use with Model 325 Ammeters for standardization work and other very exact measurements; with an overall accuracy within 1/10% of rated value. Made in single ranges only and for use only with the instrument for which it is adjusted. Prices include adjustment of shunts to the individual millivoltmeter.

For Use With 100 Division Scale Instrument

Range Amperes	Approx. Weight Pounds	Approx. Weight Kilograms
0.1	0.5	0.23
0.2	0.5	0.23
0.5	0.5	0.23
1	0.5	0.23
2	0.5	0.23
5	1.8	0.82
10	1.8	0.82
20	1.8	0.82
50	2	0.91
100	4	1.81
200	4	1.81
500	12	5.44
1000	26	11.79

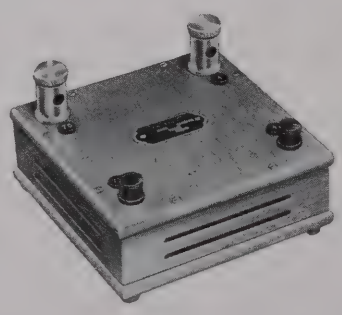

For Use With 150 Division Scale Instrument

Range Amperes	Approx. Weight Pounds	Approx. Weight Kilograms
0.15	0.5	0.23
0.3	0.5	0.23
0.75	0.5	0.23
1.5	0.5	0.23
3	0.5	0.23
7.5	1.8	0.82
15	1.8	0.82
30	1.8	0.82
75	2	0.91
150	4	1.81
300	4	1.81
750	26	11.79
1500	32	14.52

Standard Cells are Listed on Page 6.

D-C INSTRUMENTS — MODEL 325

Rated accuracy 0.1% of Full Scale Value. Scale 12.5" (318 mm)

Type: Core Magnet Moving Coil

Size { 15¾ x 14⅛ x 5¼" / 400 x 359 x 133 mm } Approx. Weight { 17 lbs. / 7.7 kgs. }

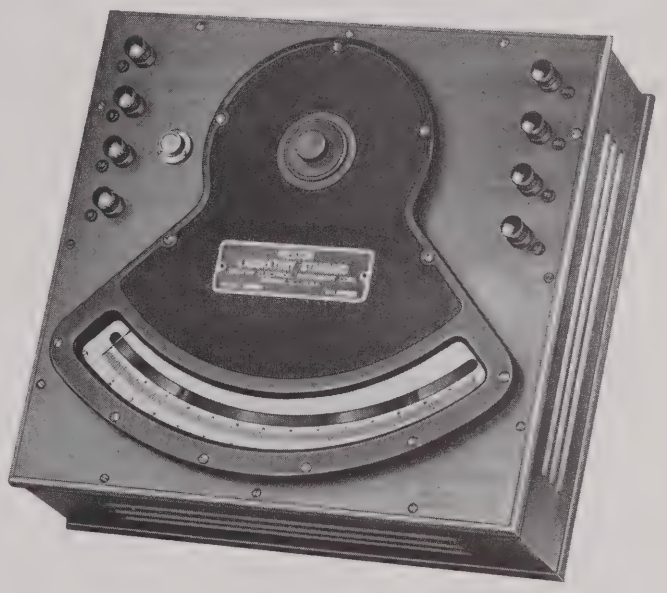

Model 325 Instruments are primary reference standards against which the accuracy of all direct current instruments may be checked. They are standardized at 25°C.

To provide an even greater degree of shielding than that of the self-shielded core magnet mechanism used in this instrument, a "shield can" surrounds the entire mechanism, a feature resulting in no measurable error in a 5 oersted field. This exceptionally high shielding also eliminates the necessity of mounting the instrument with reference to earth's field.

Precise and rapid zero adjustment is readily accomplished by a vernier type zero corrector.

D-C VOLTMETERS — MODEL 325

Sensitivity 100 ohms per volt. Higher ranges are obtained with external resistors.

Ranges	Scale Div.
300/150/75/30/15/7.5/3	150

Compensated for temperatures from 15 to 35°C, except the 3 volt range which is compensated from 20 to 30°C.

D-C AMMETERS — MODEL 325

100 Millivolts for use with Portable Precision Shunts listed on page 2. Normally supplied with either 100 divisions figured for 200/100/50 scale ranges or 150 divisions figured for 300/150/75 scale ranges. *When ordering specify which scale is preferred.*

Compensated for tempertaures from 15 to 35°C. Sensitivity, ten milliamperes full scale. Instrument is calibrated to suit shunts selected. Supplied with 5 foot (1.5 meters) shunt leads.

Section of Typical Voltmeter Scale — Model 325

(Full Size Illustration)

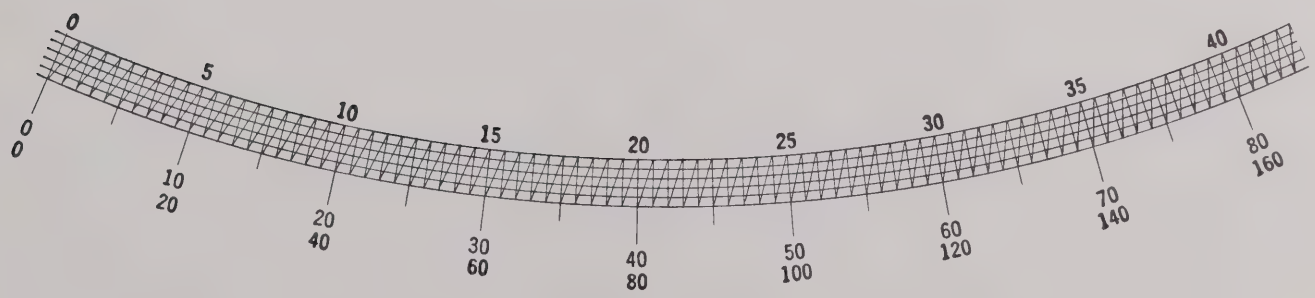

. . . Only The Most Commonly Used Ranges Are Listed—Any Practical Range Can Be Supplied . . .

A-C AND D-C INSTRUMENTS — MODEL 326

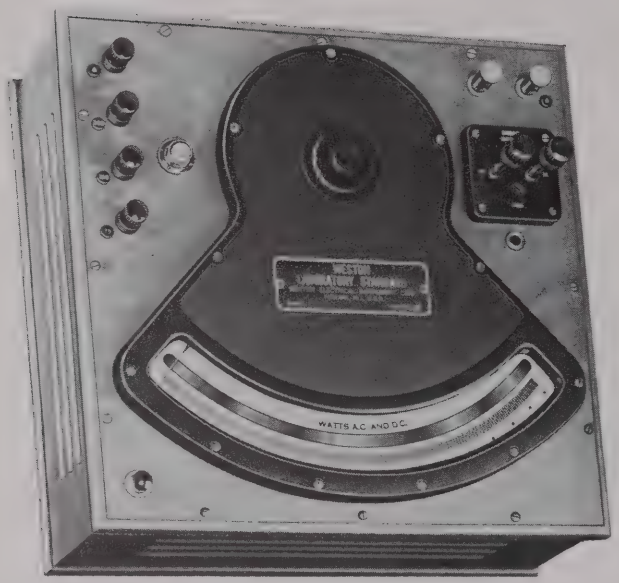

Rated accuracy 0.1% of Full Scale Value. Scale 12.1" (307 mm)

Type: Electrodynamometer
(Shielded from External Magnetic Fields)

Size { 15 1/16 x 14 3/8 x 6 1/4" / 384 x 365 x 159 mm } Approx. Weight { 20 lbs. / 9.07 kgs. }

Model 326 Instruments are primary reference standards against which all alternating current instruments may be checked. Equally accurate on direct or alternating current. Standardized at 25°C.

Frequency Coverage: Calibrated on d-c within the rated accuracy and has negligible frequency error to 125 cycles. While the general frequency span is expressed as d-c to 125 cycles, it must be recognized that a responsive mechanism will tend to follow pulsations of a very low order. Thus, measurements at artifically produced frequencies as low as 5 or 10 cps become impractical; the lowest frequency on which the standard instrument will function well is about 15 cps. Requirements for measurement of lower frequencies require special structures with abnormal damping. Correspondence is invited.

Frequency Compensation: Voltmeters, Ammeters, and Wattmeters can be frequency compensated from d-c to 500 cycles. The instruments are calibrated on d-c and the frequency error is negligible to 125 cycles for voltmeters, ammeters and wattmeters. All instruments have a frequency error less than 0.05% of full scale value to 500 cycles. Correspondence is invited for frequency compensation from d-c to 1000 cycles.

Wave Form Effect: When used on the usual commercial power circuits containing harmonics of small magnitude, the wave form error is unreadable. Under abnormal conditions with one or more harmonics of large magnitude being present, the error is generally unreadable for ammeters and wattmeters but voltmeters may have a slight error usually not exceeding the rated accuracy of the instrument.

A-C and D-C Voltmeters — Model 326

Power Consumption: 150 volt range at 115 volts, 60 cycles—7.5 watts, 7.5 volt-amperes.

Range	Approx. Res. Ohms	Scale Div.
300/150/75	3500/1750/875	150

Higher potentials are obtained with multipliers connected to the 150 volt range, or with Model 311 Potential Transformers. For potentials below 75 volts, Model 311 Standardizing Potential Transformers can be used. This transformer provides low a-c voltages for laboratory use in standardizing other voltmeters.

A-C and D-C Ammeters — Model 326

Power Consumption: 5 ampere range at 5 amperes, 60 cycles—10 watts, 10 volt-amperes.

Range	Scale Div.	Range	Scale Div.
1/0.5	100	5/2.5	100
2/1	100	10/5	100

Currents above 10 amperes are obtained with Model 327 Portable Precision Current Transformer.

Section of Typical Voltmeter Scale — Model 326
(Full Size Illustration)

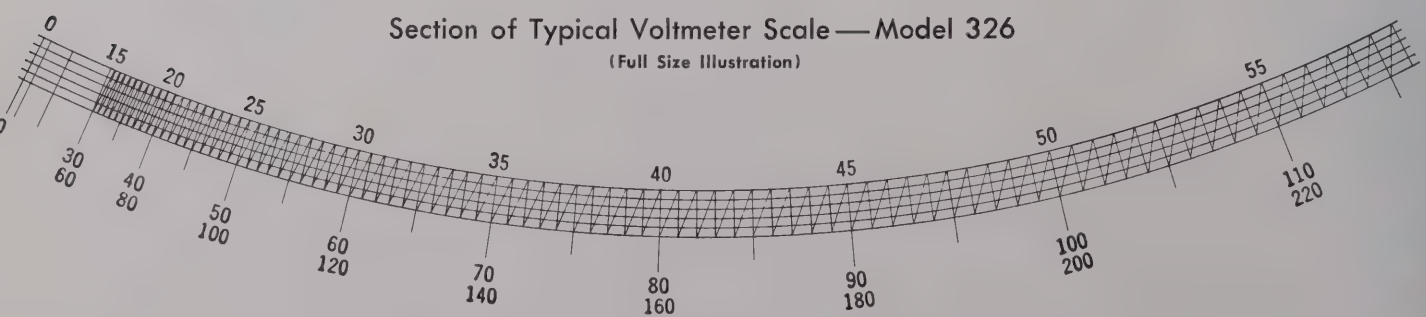

. . . Only The Most Commonly Used Ranges Are Listed—Any Practical Range Can Be Supplied . . .

Single Phase Wattmeters — Model 326

Power Consumption: Potential circuit 150 volt range at 115 volts, 60 cycles—4 watts, 4 volt-amperes. Current circuit 5 ampere range at 5 amperes, 60 cycles —0.8 watt, 0.91 volt-ampere.

Potential Ranges Volts Maximum	Current Ranges—Amperes Normal Multiple	Normal Series	Maximum Multiple	Maximum Series
300/150/75	1.0	0.5	2	1
300/150/75	2	1	4	2
300/150/75	5	2.5	10	5
300/150/75	10	5	20	10
300/150/75	20	10	40	20

Watt Ranges Field Coils in Multiple	Watt Ranges in Series Field Coils	Range Figured	Scale Divisions
300/150/75	150/75/37.5	75	150
600/300/150	300/150/75	150	150
1500/750/375	750/375/187.5	750	150
3000/1500/750	1500/750/375	750	150
6000/3000/1500	3000/1500/750	1500	150

Higher potential ranges are obtained with multipliers using 150 volt range, or with Model 311 Potential Transformers. Current ranges extended with Model 327 Portable Precision Current Transformer.

Section of Typical Wattmeter Scale — Model 326

(Full Size Illustration)

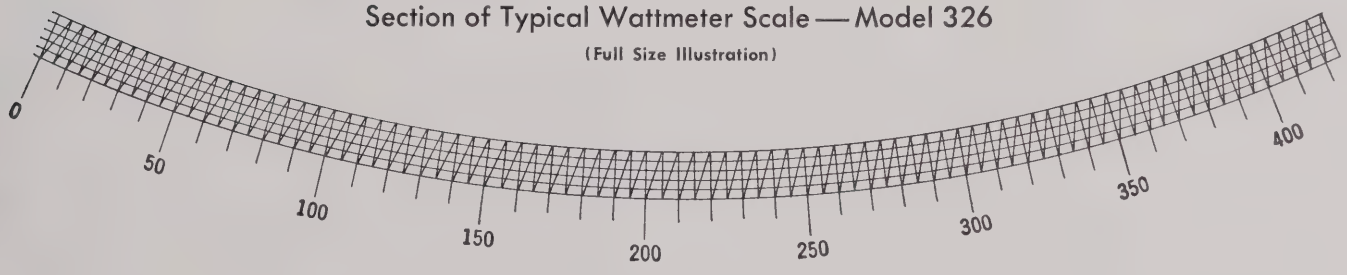

Typical Application of a Weston Laboratory Standard

STANDARD CELLS

The Weston cadmium cell, developed and patented by Dr. Edward Weston in 1893, has been recognized and used as the world standard of electromotive force since its acceptance by the International Committee on Electrical Units and Standards in 1908. The fundamental chemical composition and the arrangement of electrodes within the cell has not changed. Variations to meet different commercial requirements as to size and housing details have been made from time to time.

The cells are made in two distinct types, the Saturated or Normal cell for use in standardizing laboratories, and the Unsaturated or Standard cell commonly used as a voltage reference in conjunction with a potentiometer of some kind.

Manufacture of cells must of necessity be kept at a high level of perfection. Weston care in the production of cells requires not only use of the purest available chemicals but further processes of repurification. Precise control of electrode elements and the electrolyte is maintained. After the cells are glass sealed, they are aged. Comparison of their electrical characteristics is made periodically against a bank of Normal Cells. It is the largest bank of Normal Cells of its kind, maintained by Weston in specially controlled temperature chambers.

LABORATORY STANDARD CELL—MODEL 4 TYPE 3

Weston Standard Cell, Model 4 Type 3, is the unsaturated form of cadmium cell. A laboratory standard of reference for the volt, it is intended for use primarily in conjunction with a potentiometer for the measurement of current and voltage and for the calibration of electrical measuring instruments. It may be used, however, in any circuit of the null balanced type where the current during the balancing operation is very small and at balance it is reduced to zero.

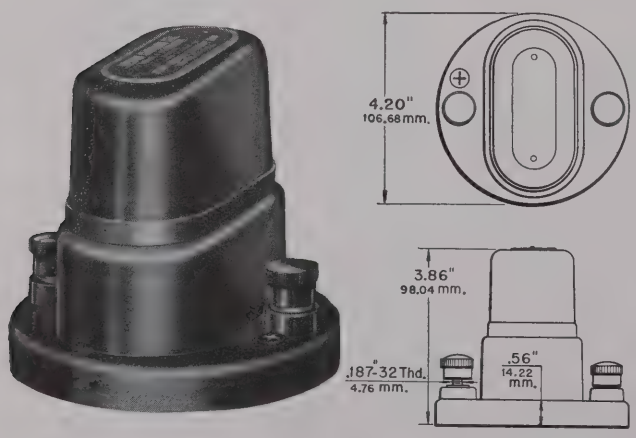

The electromotive force of the Model 4 Type 3 is between 1.0188 and 1.0198 absolute volts and its resistance is between 100 and 200 ohms. The temperature coefficient is negligible, being in the order of 5 microvolts per degree centigrade or less after sufficient time has elapsed to allow all its components to come to the same temperature. To preserve the constancy of the cell, it should not be subjected to temperatures below 4°C (39.2°F) or above 40°C (104°F) and no current greater than 100 microamperes should be drawn from it. Although these cells are portable and may be moved from place to place, they should be handled with reasonable care to prevent severe shock. When moved they should be permitted to rest a few hours, if maximum precision is required. They may be shipped by commercial carrier.

The active elements of the cell are contained in a hermetically sealed glass receptacle having the general form of a letter "H". This in turn is mounted in a heavy copper thermal equalizing shield and then in a bakelite housing provided with two binding posts.

Each Model 4 Type 3 cell is furnished with a certificate stating the exact emf of the cell. If desired a certificate issued by the U. S. Bureau of Standards will be furnished at an additional charge.

Accuracy is ±0.01%.

Approx. Weight.....2 lbs. (0.91 Kgs.)

COMMERCIAL STANDARD CELL—MODEL 3 TYPE 4

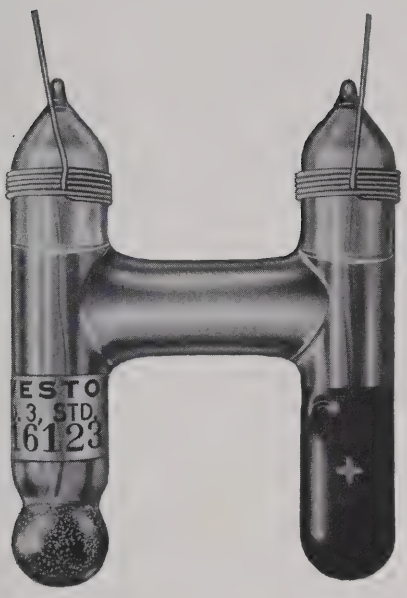

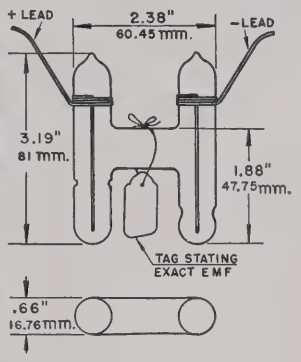

The Weston Model 3 Type 4 cell is similar in many respects to the Model 4 Type 3. However, it is smaller in size and is furnished unmounted. It is intended primarily for use in potentiometric recorders and other apparatus which employ null balance circuits.

The emf is within 1.0188 to 1.0198 absolute volts with the exact voltage stated on a label attached to each cell. The resistance is between 500 and 800 ohms. The cell is hermetically sealed. It is supplied in a cardboard box and may be shipped by commercial carrier. In use it should be shielded from continuous light, and no more current than 100 microamperes should be drawn from it.

Accuracy is ±0.1% from 4°C to 40°C.

Approx. Weight.....**0.14 lb. (0.06 Kg.)**

NORMAL CELL—MODEL 3 TYPE 7

The Weston Model 3 Type 7 Normal Cell is the saturated type of cell intended for use under controlled conditions as a primary standard of reference for the volt. These cells are generally used in banks of 5 or more to permit cross-checking.

Since the saturated form of cell has a temperature coefficient of approximately 50 microvolts per °C it is customary to hold their temperature at a selected value around 30°C by means of an oil or air bath. Under these and other conditions of use peculiar to the saturated form of cell, with which the user should be acquainted, the cells may be used as a precise standard to establish the voltage of working cells of the laboratory type such as Model 4 Type 3.

To maintain the highest order of constancy possible, Normal Cells are not provided with septa to hold the chemical elements in place. Consequently they cannot be tipped more than about 30-40° from the vertical and their shipment by commercial carrier is impractical. Transportation is by the purchaser's messenger.

Weston Normal Cells are labeled with their emf as determined at the Weston laboratories by comparison with a bank of similar cells cross-checked periodically with the bank at the U. S. Bureau of Standards. Legal voltage, by international agreement, is 1.018636 absolute volts at 20°C. Voltage Correction Table for temperatures between 20° and 40°C is furnished with each bank of cells.

Accuracy is better than 0.01%, dependent on conditions of use.

Approx. Weight.....**0.2 lb. (0.09 Kg.)**

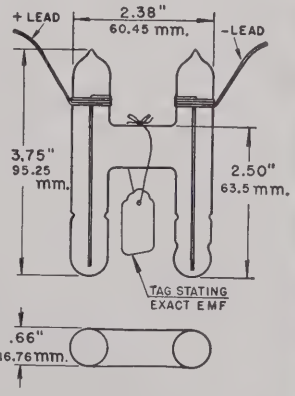

DISTRICT OFFICES

ALBANY	LOS ANGELES
BOSTON	MILWAUKEE
BUFFALO	NEWARK, N. J.
CEDAR RAPIDS	NEW ORLEANS
CHICAGO	NEW YORK
CINCINNATI	PHILADELPHIA
CLEVELAND	ROCHESTER
DAYTON	SAN DIEGO
DETROIT	SAN FRANCISCO
HARRISBURG	SEATTLE
HOUSTON	SYRACUSE
KNOXVILLE	WASHINGTON, D. C.

WESTON REPRESENTATIVES

AMARILLO–Butler and Land
ATLANTA–E. A. Thornwell, Inc.
BALTIMORE–Thomas H. Closs
CHARLOTTE, N. C.–Ranson, Wallace & Company
DALLAS–Butler and Land
DENVER–Peterson Company
JACKSON–Curtis H. Stout, Inc.
JACKSONVILLE–Ward Engineering Co., Inc.
KANSAS CITY, MO.–C. B. Fall Co., Hickman Mills
LITTLE ROCK, ARK.–Curtis H. Stout, Inc.
MEMPHIS–Curtis H. Stout, Inc.
MIDDLETOWN, CONN.–Dittman & Greer, Inc.
MINNEAPOLIS–Pinkney & Hine
ORLANDO, FLA.–Ward Engineering Co., Inc.
PHOENIX–J. E. Redmond Supply Co.
PITTSBURGH–Russell F. Clark Co.
RICHMOND, VA.—Ranson, Wallace & Co.
SHREVEPORT–Curtis H. Stout, Inc.
ST. LOUIS–C. B. Fall Company
TULSA, OKLA.–Riddle and Hubbell Company

CANADA

MONTREAL–Daystrom, Limited
TORONTO–Daystrom, Limited

EXPORT and OVERSEAS

Daystrom International
100 Empire Street
Newark 12, N. J.

Printed in U. S. A. 7-59

WESTON

PRICE LIST 06-100

EFFECTIVE NOVEMBER 9, 1959

Laboratory Standards and Electronic Laboratory Instruments

All Prices Subject to Change Without Notice and are F. O. B. Factory, Newark 12, N. J.

SUPERSEDES SEPTEMBER 15, 1959

INDICATING LAB STANDARDS

MODEL 325 D-C AMMETER

Range	Scale	Scale Div.	Catalog Number	Price
100 MV	200/100/50	100	325-2901001	$975.00
100 MV	300/150/75	150	325-2901002	975.00

For use with portable precision shunts. Price above does not include price of shunt, but does include 5 ft. shunt leads. For price of shunts refer to Circular 06-601.

MODEL 326 A-C AND D-C VOLTMETER

Range	Approx. Resis. Ohms	Scale Div.	Catalog Number	Price
300/150/75	3500/1750/875	150	326-1901001 s	$1,201.75

Also stocked with a frequency of 25-500 cycles – Price is $1,244.50

MODEL 325 D-C VOLTMETER

Range	Ohms Per Volt	Scale Div.	Catalog Number	Price
300/150/75/30/15/7.5/3	100	150	325-1901001 s	$1,050.00

MODEL 326 A-C AND D-C AMMETER

Range	Scale Div.	Catalog Number	Price
1/0.5	100	326-2901004	$1,236.75
2/1	100	326-2901001 s	1,236.75
5/2.5	100	326-2901002 s	1,201.75
10/5	100	326-2901003 s	1,201.75

Currents above 10 amperes are obtained with Model 327 Portable Precision Current Transformer.

MODEL 326 – SINGLE PHASE WATTMETERS

Potential Ranges Volts Maximum	CURRENT RANGES AMPERES				WATT RANGES			
	NORMAL		MAXIMUM					
	Multiple	Series	Multiple	Series	Field Coils In Multiple	Field Coils In Series	Catalog Number	Price
300/150/75	1.0	0.5	2	1	300/150/75	150/75/37.5	326-6901002	$1,343.50
300/150/75	2	1	4	2	600/300/150	300/150/75	326-6901003	1,343.50
300/150/75	5	2.5	10	5	1500/750/375	750/375/187.5	326-6901001 s	1,308.50
300/150/75	10	5	20	10	3000/1500/750	1500/750/375	326-6901004	1,308.50
300/150/75	20	10	40	20	6000/3000/1500	3000/1500/750	326-6901005	1,383.50

ELECTRONIC LAB STANDARDS

Model		Price
686	Electron Tube Analyzer.	$979.00 s

Model		Price
1472	Integrating Fluxmeter	$1,585.00 s
1473	Precision Integrator – Type 1 .	1,370.00
1473	Precision Integrator – Type 2 .	1,420.00
1475	Multi-Range D-C Amplifier. . .	1,430.00
1482	Product Resolver.	1,585.00 s

STANDARD CELLS

Model	Type No.	Certificate	Catalog Number	Price
3	4	None	3-0000004	On Application
3	7	Weston	3-0000007	On Application
4	3	Weston	4-0000003 s	$49.50
4	3	U. S. Bureau of Standards	4-0000025	75.75

s – Normally carried in stock. Do not include "s" in your order write-up.

Daystrom, Incorporated, DAYSTROM-WESTON SALES DIVISION, Newark 12, N. J., U. S. A.

PRINTED IN U.S.A.

A SIMPLER APPROACH TO INSTRUMENT CALIBRATION

WESTON *Instruments*

WESTON MODEL 60 SERIES CALIBRATORS

The Weston Model 60 Series Meter Calibrators introduce a simpler approach to instrument calibration. In the design of these consoles, the principles kept uppermost were:

1. **Simplicity of operation.**
2. **Use only of components which were the best obtainable, and which had been proved by the test of time.**
3. **Conservative component ratings to assure maximum, maintenance-free reliability.**
4. **Ability to standardize all units directly from d-c primary sources.**
5. **Constant accuracy at any point, instead of only full scale accuracy.**
6. **All rotary selector switches have silver contacts.**
7. **Voltmeter switch circuits neither open the circuit between successive points nor do they short circuit the system. The pointer of the voltmeter under test passes smoothly from one to the next, not falling to zero between points.**
8. **Equipment cannot overheat. Ample dissipation of heat is provided.**

The series includes the Model 62 a-c Ammeter Calibrator, the Model 63 a-c Voltmeter Calibrator, the Model 64 d-c Volt-Milliamp-Microamp Calibrator, and the Model 65 d-c Ammeter Calibrator. Each of these units is completely self-contained and independent of the others, but care is used in the phasing of the a-c units so that when ordered at the same time they can be used together to calibrate wattmeters at unity power-factor.

MODELS 62 AND 63 A-C CALIBRATORS

The reference standard for the Model 62 or 63 is a special version of the Weston Model 326 Dynamometer-type Laboratory Standard. The mechanism is mounted with the pointer in its normal horizontal position, but the end of the pointer is bent down at right angles so that it can be read against a vertical mirror-scale which consists of a hairline at top-mark only. At this one calibration point, and because the pointer movement is mechanically restricted in movement to the top 10% of the scale to avoid spring-set, calibrator accuracy can be maintained for long intervals to .03%, leaving an allowance of .02% for transformer and switch contact errors to result in the .05% output accuracy rating. This single-point calibration also allows the coils of the dynamometer to be oriented at right angles to each other at this point, so that the difficulty of frequency compensation for the variable mutual inductance normally present in an indicating instrument is avoided. These monitors show no measurable frequency effects at any frequency from d-c to 1000 cycles per second for which they are compensated.

Monitoring of the input to the control panel of the Models 62 and 63 at a fixed level, and depending for current or voltage division only on tapped transformers, enables the rated accuracy of .05% to be uniformly maintained over the entire output range without degradation.

Current or voltage at the output is dependent only on transformer turns-ratio. It is independent of the load that a particular meter under test may require. However, if the calibrator is overloaded, it will be impossible for the monitor to be set to its calibration point, thereby avoiding the possibility of erroneous calibrations.

Fig. 1 — Block diagram of Model 62 A-C Current Calibrator.

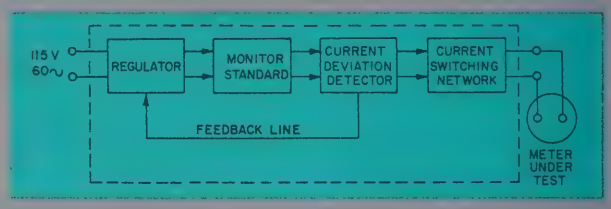

To illustrate technique of regulating for a constant current output from the regulator, the following simplified schematic may help:

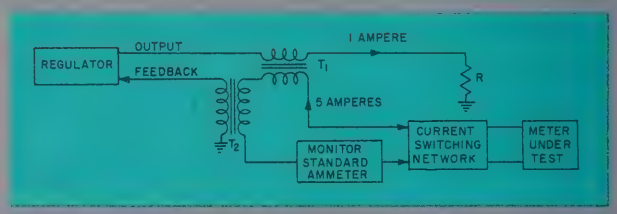

Fig. 2 — Method of control to obtain constant current output.

Transformer T_1 acts as the primary of a current transformer with R as a 100 W load that biases the regulator into its most stable range of operation, and also acts as an isolation transformer between the power source and the current switching network. T_2 is another current transformer that samples the monitored current into the switching network, and controls the heater current of a thermionic diode that acts as the regulating element. Any tendency of the current in the secondary of T_1 to deviate from the desired value is detected by Transformer T_2 and the operating point of the thermionic diode adjusted in a direction to prevent the change.

The Model 63 A-C Voltmeter Calibrator operates in a similar fashion, but in this instance it is required that a constant voltage be maintained into the voltage switching network.

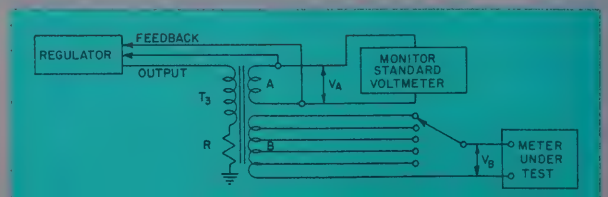

Fig. 3 — Method of control to obtain constant voltage output.

The secondary windings A & B of transformer T_3 are very closely coupled, and since most of the transformer losses are supplied by the primary winding, the voltage ratio between V_A and V_B becomes a function of turns ratio only, and independent of load applied to secondary winding B. Therefore, any tendency of V_B to change causes a proportional tendency in V_A, which is fed back to control the filament voltage of the thermionic diode and shifts its operating point to prevent the change in V_B. If secondary B is overloaded beyond the capacity of the regulator to compensate, it becomes instantly apparent because the monitor standard will no longer maintain its set point.

The only critical element in either of the a-c calibrators is the monitor standard. However, since this a dynamometer-type instrument of the highest quality, it will maintain its accuracy for extended intervals of time. Perhaps more important, it can be standardized readily and directly from d-c primary standards without need of any intermediate transfer standards. The d-c models 64 and 65 may be used for this purpose.

MODELS 64 AND 65 D-C CALIBRATORS

The Model 64 D-C Voltmeter Calibrator, and the Model 65 D-C Ammeter Calibrator are quite different in operation from their a-c counterparts. In the d-c units, the reference standard is a Weston Standard Cell. The block diagram of the Model 64 D-C Voltmeter Calibrator is shown below:

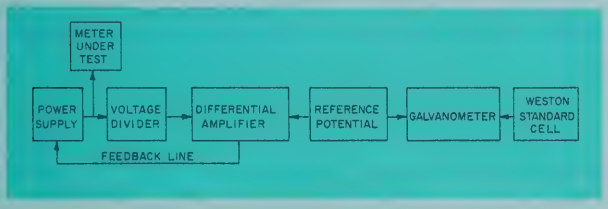

Fig. 4 — Block diagram of Model 64.

Again, to illustrate the method of maintaining precise voltages at the point of test, the following partial circuit diagram is used.

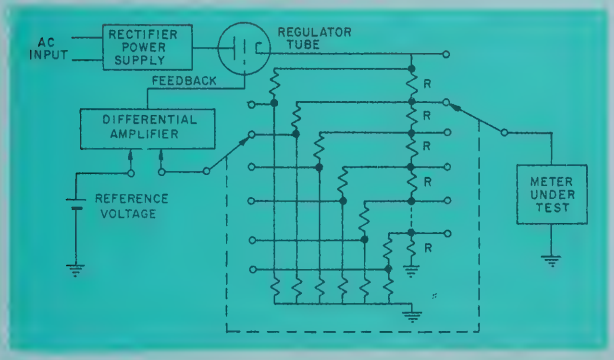

Resistors "R" are of nominal tolerance and serve to divide the output voltage of the rectifier into fifteen approximately equal parts. Precision resistors are not required in this divider. The resistances of the meters being tested will have a wide range of values, and may not even be known. Since the meters being calibrated are in shunt with a variable number of the resistors "R" as the output tap is changed, the specific output tap is sampled as to voltage output and this sample compared against the reference standard voltage. The sampling is accomplished by pairs of 0.02% resistors that are matched for ratio and temperature coefficient only. Their absolute values are not critical. Any difference in voltage between this sample and the reference standard becomes the input signal of a very stable and high-gain electronic servo-amplifier whose output adjusts the bias of a series regulator tube in a direction as to reduce the amplifier input signal to essentially zero.

The zero-drift and resolution of the amplifier contribute no more than 0.01% to the possible output error. The sampling resistors can contribute another 0.02%. The standard cell, which is of the unsaturated variety can drift another 0.005% per year. It may therefore be seen that the rating of 0.05% applied to the output is conservative and valid over extended intervals between standardization checks. Adjustments are provided to standardize the Models 64 and 65 against various standard cell voltages as these cells age.

Regulation of the Model 65 is very similar, but in this instance, precision shunts in the output circuit allow the millivolt drop across them to act as the sample to compare against the voltage reference standard. Any difference is again amplified and then used to regulate the power supply to exactly the output current required.

It was felt that the full 30 ampere output was not likely to be required too often and would therefore increase heat dissipation unreasonably if the supply was run wide open with only a series regulator tube to decrease the output to lower values. To simplify the design and eliminate this problem, the d-c output is varied coarsely by varying the input a-c as the range switch of the calibrator is operated. This places the power supply always within the range of the electronic regulator to control. The point of regulation is automatically controlled by sampling the millivolt drop across a precision shunt in the output of the calibrator, comparing this voltage with that of the reference voltage standard, amplifying any difference and adjusting the bias of the series regulator tube of the power supply so that this difference is essentially zero.

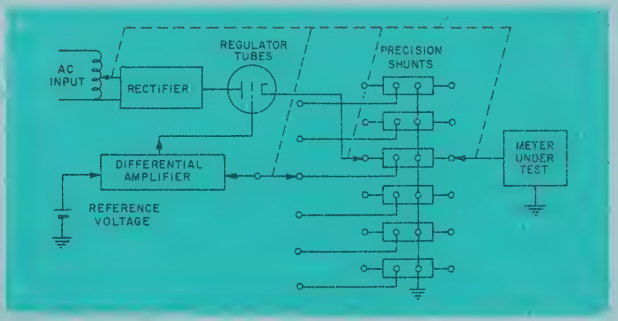

MODEL 61 CALIBRATION CONSOLE

The Models 62, 63, 64 and 65 can be supplied as a unified console to a variety of configurations as required by your space and room arrangement. This group is designated as the Model 61. Correspondence is invited.

WESTON A-C AMMETER CALIBRATOR

FUNCTION

Weston Model 62 semi-automatic calibrator provides a quick easy-to-use and precisely accurate method of checking or calibrating a-c ammeters, from 1 to 50 amperes full scale inclusive.

FEATURES

- **scale can be subdivided into hundredths**
- **calibrator will automatically divide any range into as many as 30 equally divided parts**
- **no longer necessary to compute the value of each check point and then set up several pieces of equipment to obtain the required current when calibrating a-c ammeters having odd ranges to match instrument transformer ranges**
- **reading accuracy is assured through the use of mirror scales and knife-edge pointer on the precision monitoring instrument**
- **calibrator can also be used as a precisely regulated constant current supply**
- **any load variation on the calibrator will be automatically adjusted**
- **input power can be supplied from any standard 115 volt 60 or 400 cycle a-c source (400 cycles on special order)**
- **calibrator requires only one operator!**

SPECIFICATIONS

accuracy . . . 0.05% of indicated value

ranges . . . 1 through 50 amperes

range extremes . . . 0.033 ampere-55 amperes

output power . . . 10 volt amperes maximum

power requirement . . . nominal 115 volts (100-130 volts) 60 cycle a-c, 250 watts maximum

tube complement . . . 1 each — 6L6, 6BN6, 6SJ7, 1236, OD3/VR150 . . . (2) 5U4

mounting . . . supplied mounted in a cabinet; can be removed from cabinet for mounting in standard 19″ rack

approx. weight . . . 160.5 lbs. 72.8 kgs.

approx. dimensions . . . 30¾″ high x 21½″ wide x 19⅛″ deep

WESTON A-C VOLTMETER CALIBRATOR

FUNCTION

Weston Model 63 calibrator has been designed to simplify the calibration of a-c voltmeters. This easy-to-use a-c voltage calibrator eliminates the necessity of calculating the value of each check point and then setting up several pieces of equipment to obtain the required voltage.

FEATURES

- **unique switching network will automatically divide range into as many as 45 parts**
- **monitor provides continuous visual check on the accuracy of the calibrator output**
- **any deviation from output indicated on switches will instantly and automatically be corrected**
- **input power can be supplied from any standard 115 volt 60 or 400 cycle a-c source (400 cycles on special order)**
- **calibrator requires only one operator !**

SPECIFICATIONS

accuracy . . . 0.05% of indicated value

ranges . . 1500/750/300/150/75/30/15/7.5/1.5/0.75 volts

voltage output extremes . . . 0.025 volt — 1550 volts

output power . . . 12 volt amperes maximum

input power requirement . . . nominal 115 volts (100-130), 60 or 400 cycle a-c, 250 watts maximum

tube complement . . . 1 each — 6L6, 6BN6, 6SJ7, 1236, OD3/VR150 . . . (2) 4U4

mounting . . . supplied mounted in a cabinet; can be removed from cabinet for mounting in standard 19″ rack

approx. weight . . . 162 lbs. 73.48 kgs.

approx. dimensions . . . 30¾″ high x 21½″ wide x 19⅛″ deep

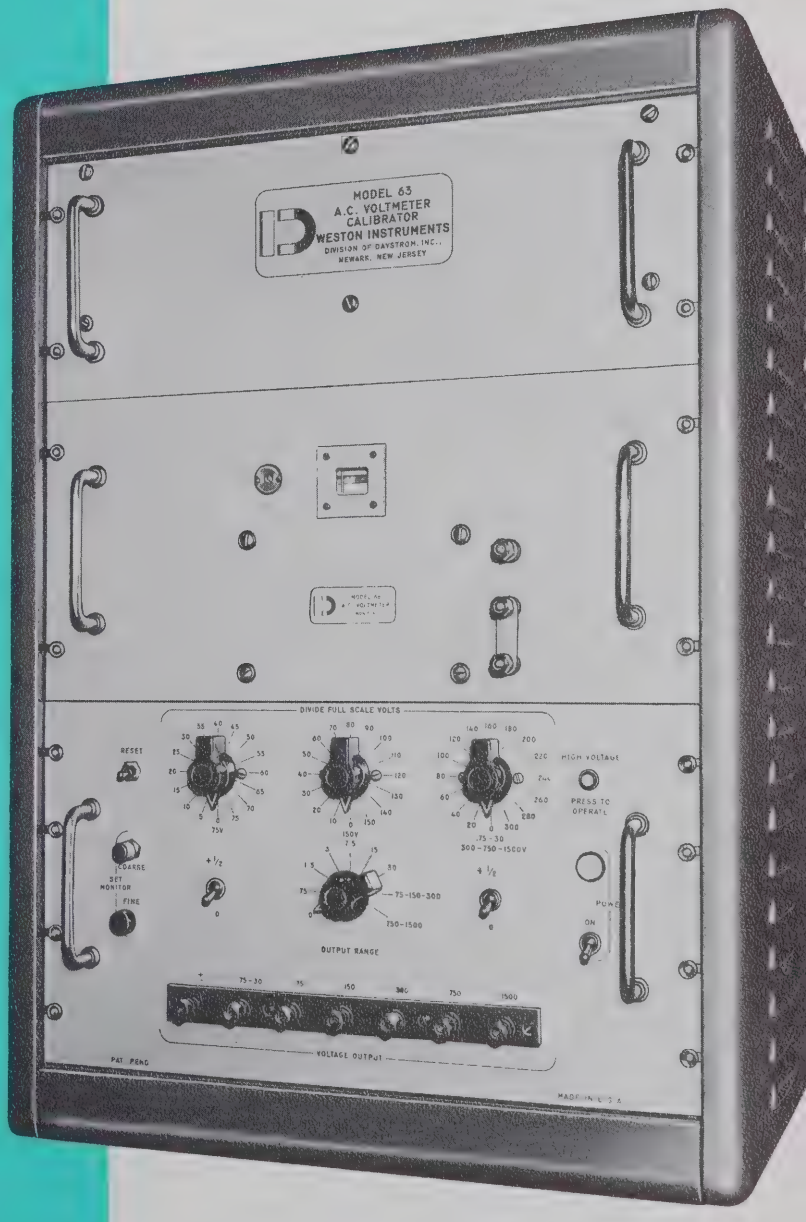

WESTON D-C VOLTMETER CALIBRATOR

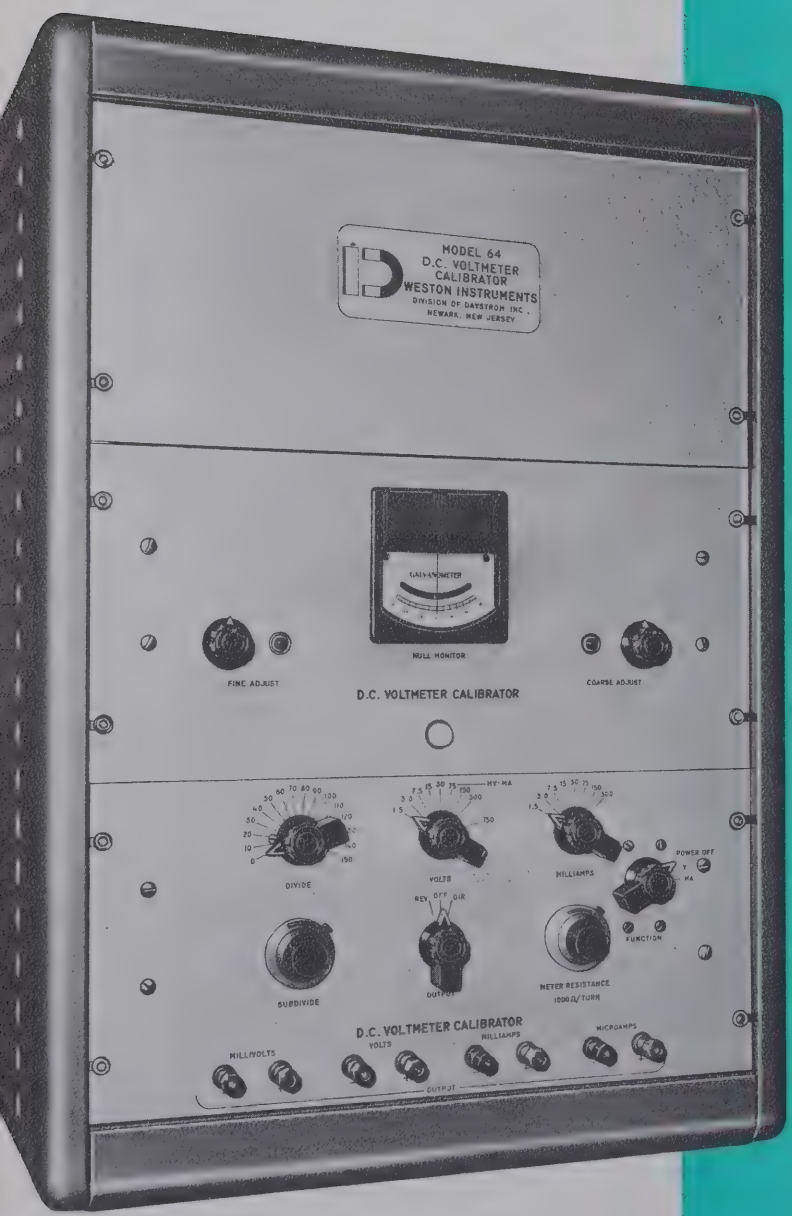

FUNCTION

Weston Model 64 Calibrator has been specifically designed to provide an easy and rapid method for precise calibration of direct current voltmeters . . . millivoltmeters . . . milliammeters . . . microammeters.

FEATURES

- **any range can be automatically divided into as many as 15,000 equally divided parts**
- **any drift or deviation in output voltage is instantaneously and automatically corrected**
- **a reference standard (Weston Standard Cell) is provided so that calibrator can be standardized**
- **semi-automatically divides each step equally regardless of the range or number of steps.**
- **can be used as a precise regulated d-c source**
- **calibrator requires only one operator !**

SPECIFICATIONS

accuracy . . . 0.05% of indicated value

ranges . . . 750/300/150/75/30/15/7.5/3/1.5 volts; 150 millivolts (with full stepping capability); 300/150/75/30/15/7.5/3/1.5 milliamperes; 750/300/150/75/30/15/7.5/3/1.5 microamperes

output extremes . . . 775 and 0.05 volts; 155 and 5 millivolts; 310 and 0.05 milliamperes; 775 and 0.05 microamperes

stepping . . . all ranges have a main stepping switch and a vernier control. The vernier control divides the main step span into .2% increments.

input power requirements. . . nominal 115 volts (100-130), 60 cycles a-c, 250 watts maximum

maximum output power . . . VOLTS — 0-150 v range = 300 ma; 150-300 v range = 150 ma; 300-750 v range = 60 ma.
MILLIVOLTS — 70 ma.
MILLIAMPERES — maximum allowable load resistance varies from 125 ohm @ 300 ma to 150K ohm @ 1.5 ma.
MICROAMPERES — 10,000 ohms maximum

tube complement . . . . 1 each — 6SJ7, 6X5, 5N060 Time Delay Relay, 5Y3, 6SL7, 6K6, 6H6; (2) 5R4, 0A2; (3) 6BG6

mounting . . . supplied in a cabinet; can be removed from cabinet for mounting in standard 19″ rack

approx. weight . . . 130 lbs. 58.97 kgs.

approx. dimensions . . . 30¾″ high x 21½″ wide x 19⅛″ deep

WESTON D-C AMMETER CALIBRATOR

FUNCTION

Weston Model 65 semi-automatic calibrator greatly reduces the number of steps required to calibrate or check the calibration of d-c ammeters, from .75 to 30 amperes full scale inclusive.

FEATURES

- **any full scale range can be divided into as many as 15,000 equal parts**
- **calibrator adjusts automatically for any variation in line or load**
- **a standard reference source (Weston Standard Cell) is provided, against which the calibrator is standardized**
- **calibrator does not require calculation of each checkpoint and then setting up several pieces of equipment to provide the required current**
- **calibrator requires only one operator !**

SPECIFICATIONS

accuracy . . . 0.05% of indicated value

ranges . . . 30/15/7.5/3/1.5/0.75 amperes

output extremes . . . 1 ma. and 32 amperes

stepping . . . all ranges have a 15 step main switch and a vernier control. The vernier control can divide each of the steps on the main switch into as many as 1000 equal parts

input power requirements . . . nominal 115 volts (100-130), 60 cycle a-c, 250 watts

output power . . . from 1 volt ampere at .75 amp range to 40 volt ampere at 30 amp range

tube complement . . . 1 each — 6SL7, 6K6, 6H6, 6L6, 5Y3, 6SJ7, OD3/VR150; (2) 5U4

mounting . . . supplied mounted in a cabinet, can be removed from cabinet for mounting in standard 19" rack

approx. weight . . . 178.5 lbs. 80.97 kgs.

approx. dimensions . . . 30¾" high x 21½" wide x 19⅛" deep

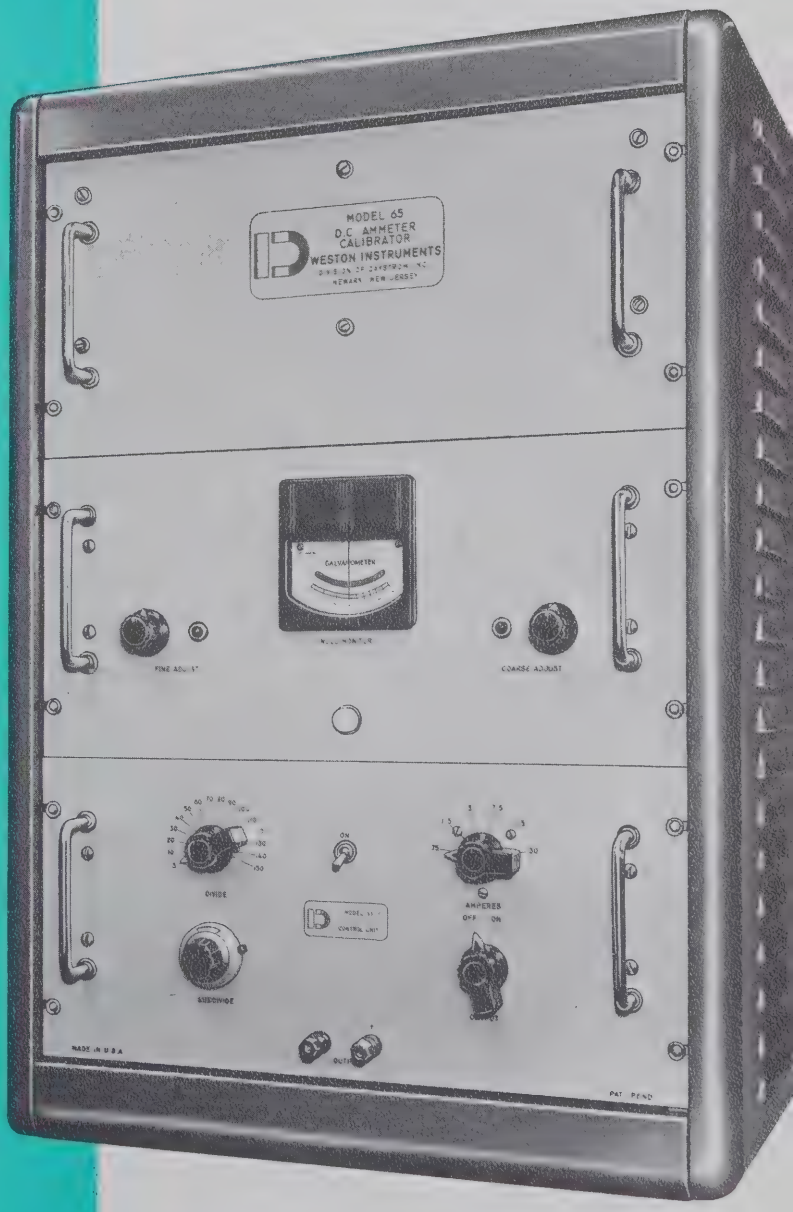

CONTROLLED TEMPERATURE BATH FOR SATURATED STANDARD CELLS

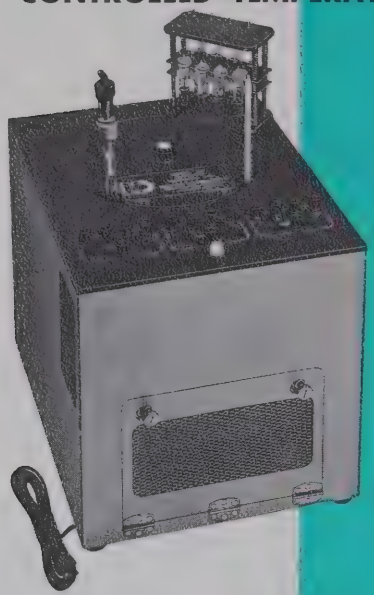

*any constant temperature can be maintained at any higher level for experimental use by adjustment of regulator.

Model 66 Controlled Temperature Bath is designed to maintain 3 banks of Weston Normal Cells at a constant temperature. The cells are immersed in a tank of neutral oil which is maintained at a constant temperature of 35 C ± 0.01 C*, therefore the output variation of the cell is held to 0.5 microvolt. Temperature is indicated by a thermometer graduated in increments of 0.02 C per division.

FEATURES

- three racks, each holding up to four cells can be accommodated
- rack carrying cases are supplied so cells can be carried to U. S. Bureau of Standards for certification
- each cell can be checked while in the bath without disturbing it
- wiring and connections from the cells to and including the binding posts are copper to prevent any errors from thermal voltages
- heater and sensitivity controls are conveniently located in front of case

SPECIFICATIONS

input power requirements.....nominal 115 volts 60 cycle a-c, 300 watts
tank capacity....5 gallons (approx. 4 gal. of oil required for proper operation)
approx. weight (without oil).....30 lbs.
approx. dimensions.....13¾″ high x 14″ wide x 18″ deep

WESTON STANDARD CELL COMPARATOR — MODEL 1000

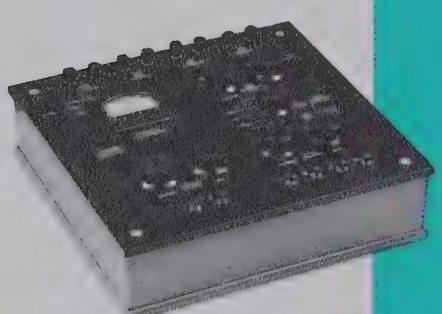

The Weston Standard Cell Comparator consists of four sets of controls and an auxiliary galvanometer mounted in a mahogany case with binding posts for connections to a series of auxiliary components.

Model 1000 is a precision instrument for measuring the voltage of an unsaturated or common form of standard cell based upon a known potential of a saturated cell. It is a specialized potentiometer wherein the voltage of a cell under test is opposed to that of a reference cell to produce a voltage difference which, when added algebraically to the reference cell voltage, indicates directly the voltage of the cell under test. The Weston Comparator displays its measured voltage to six decimal places. With a known saturated cell voltage as a reference, the Comparator will measure the open circuit voltage of any saturated or unsaturated cell in good condition to within 5 microvolts, and to within a possible limit of error of 7.5 microvolts for cells at the extreme limit of measurement.

DAYSTROM-WESTON DISTRICT OFFICES

ALBANY • BOSTON • BUFFALO • CEDAR RAPIDS • CHICAGO • CINCINNATI • CLEVELAND • DAYTON
DETROIT • HARRISBURG • HOUSTON • KNOXVILLE • LOS ANGELES • MILWAUKEE • NEWARK
(Union, N. J.) • NEW ORLEANS • NEW YORK • PHILADELPHIA • ROCHESTER • SAN DIEGO
SAN FRANCISCO • SEATTLE • SYRACUSE • WASHINGTON, D. C.

WESTON REPRESENTATIVES

AMARILLO.....Butler and Land
ATLANTA.....E. A. Thornwell, Inc.
BALTIMORE.....Thomas H. Closs
CHARLOTTE, N. C.....Ranson, Wallace & Company
DALLAS.....Butler and Land
DENVER.....Peterson Company
JACKSON.....Curtis H. Stout, Inc.
JACKSONVILLE.....Ward Engineering Co., Inc.
KANSAS CITY, MO....C. B. Fall Co., Hickman Mills
LITTLE ROCK, ARK.....Curtis H. Stout, Inc.
MEMPHIS.....Curtis H. Stout, Inc.
MIDDLETOWN, CONN.....Dittman & Greer, Inc.
MINNEAPOLIS.....Pinkney & Hine
ORLANDO, FLA.....Ward Engineering Co., Inc.
PHOENIX.....J. E. Redmond Supply Co.
PITTSBURGH.....Russell F. Clark Co.
RICHMOND, VA.....Ranson, Wallace & Co.
SHREVEPORT.....Curtis H. Stout, Inc.
ST. LOUIS.....C. B. Fall Company
TULSA, OKLA.....Riddle and Hubbell Company

CANADA
MONTREAL.....Daystrom, Limited • TORONTO.....Daystrom, Limited

EXPORT AND OVERSEAS
DAYSTROM INTERNATIONAL.....100 Empire Street, Newark 12, N. J.

DAYSTROM, INCORPORATED
WESTON INSTRUMENTS DIVISION
614 FRELINGHUYSEN AVENUE, NEWARK 12, NEW JERSEY

06-101-A

Printed in U.S.A

WESTON

PRICE LIST 06-101

EFFECTIVE NOVEMBER 9, 1959

Calibration Equipment

All Prices Subject to Change Without Notice and are F. O. B. Factory, Newark 12, N. J.

SUPERSEDES SEPTEMBER, 1959

Model	Description	Price		
		60 Cycles 115 Volts	400 Cycles 115 Volts	50 Cycles 220 Volts
61	Standard Calibration Console	$12,000.	$12,350.	$12,350.
61	De Lux Calibration Console	12,500.	12,850.	12,850.
62	A-C Ammeter Calibrator	3,000.	3,175.	3,175.
63	A-C Voltmeter Calibrator	3,000.	3,175.	3,175.
64	D-C Voltmeter Calibrator	2,750.	–	2,750.
65	D-C Ammeter Calibrator	3,400.	–	3,400.
66	Standard Cell Oil Bath, Including Three Cell Racks and Carrying Cases, Less Cells	1,285.	–	1,285.

Note: Items above are supplied complete, including test leads and instruction books. See listing under "Accessories" for standard cells with Model 66.

Model	Description	Price
1000	Standard Cell Comparator, complete, except for Light Beam or other sensitive Galvanometers required	$2,500.

ACCESSORIES

Model	Description	Price
9924	Foam Padded Carrying Case for transporting one Standard Cell Rack of Model 66 to and from certification facility. Rack holds up to four cells.	$38.50
3 Type 7	Normal Cell for use with Model 66	75.00
9930	Spare Current Test Leads for Model 62 or 65. Flexible 50 Ampere low loss cable, 18" long with Spade Lugs at ends. D-300222-001.	$18.75 per pair
9926	Spare Voltage Test Leads for Model 63 or 64. Flexible insulated cable, 60" long, with Spade Lugs at ends. D-4516-001	$15.00 per pair

Daystrom, Incorporated, DAYSTROM-WESTON SALES DIVISION, Newark 12, N. J., U. S. A.

PRINTED IN U.S.A.

11-59-1

PORTABLE STANDARDS

A-C and D-C Voltmeters

A-C and D-C Ammeters

and Milliammeters

Wattmeters

Power Factor Meters

Frequency Meters

Phase Angle Meters

Transformers and Resistors

INDICATE
WESTON
Instruments
SINCE 1888
RECORD — CONTROL

CATALOG
A-28-G

WESTON INSTRUMENTS, DIVISION OF DAYSTROM, INCORPORATED, NEWARK 12, N. J., U.S.A.

MODEL 315

MODEL 315

Rated Accuracy 0.25% of Full Scale Value, Horizontal Position ..... Scale 5.25"

Self Shielded Core Magnet Type
(Shielded from External Magnetic Fields)

Size { 8½ x 10⅜ x 5⅞" / 216 x 264 x 147 mm } ..... Approx. Weight { 9 lbs. / 4.1 kgs.

Model 315 incorporates the core magnet self-shielding mechanism. To provide even greater shielding than that inherent in the core magnet mechanism, a special shield can has been placed around the entire mechanism, with the result there is no measurable error in a 5 oersted field. This exceptional shielding eliminates any possible permanent error in the core magnet as well as the unrestricted use of these instruments in close proximity to magnetic materials without affecting its accuracy.

The instrument is mounted in a mahogany carrying case having a hinged cover which may be readily removed. This sturdy case provides excellent protection to the instrument at all times. A certificate is provided with each instrument supplying all essential data including true temperature correction factors, sustained operation and external field influences, etc.

D-C VOLTMETERS — MODEL 315

100 Ohms per Volt

Ranges	Scale Div.
150/75/30/15/7.5/3	150
750/300/150/75/30/15/7.5/3	150

Self contained up to 750 volts inclusive. For higher ranges use multiplier.

EXTERNAL SHUNT TYPE AMMETER — MODEL 315

Ranges	Resistance	Scale Div.
100/50 mv	20/10 ohms	100/150

Supplied with 5 ft. (0.026 ohm) leads.

These instruments are for use with external shunts and are normally supplied having scale captions of "AMPERES DIRECT CURRENT". Unless otherwise specified, scales are supplied having dual calibrations figured 0-100 and 0-150 for greater versatility. Portable testing and rotary switch shunts are adjusted to a 50 millivolt drop. Portable precision shunts are of the 100 mv variety (Refer to Cir. A-1006). External shunt type ammeters using 50 mv portable testing external shunts or portable multiple range rotary switching shunts have accuracies of 0.33 percent (combination of instrument and shunt). Those using 100 mv precision shunts have accuracies of 0.25 percent.

D-C MILLIAMMETERS — MODEL 315

Ranges	Scale Div.
300/150/75/30/15/7.5/3/1.5	150
1500/750/300/150/75/30/15/7.5	150

For microammeters and multi-range milliammeters other than those listed above, Model 622 is recommended (See Cir. A-20).

Ordering Information for Portable Standards

It is always advisable to supplement the ordering information with as much pertinent data as possible. The following check list will aid in determining information required to insure your receiving the type of equipment you wish to order.

1. **Model Number and Range**
2. **For Direct or Alternating Current**
3. **Sensitivity, if other than Listed**
4. **Frequency, if other than Standard**
5. **Leather Carrying Case**

For definitions of terms used and other detailed information reference may be made to American Standards Association standard for Electrical Indicating Instruments C39.1-1955.

MODELS 341 and 370

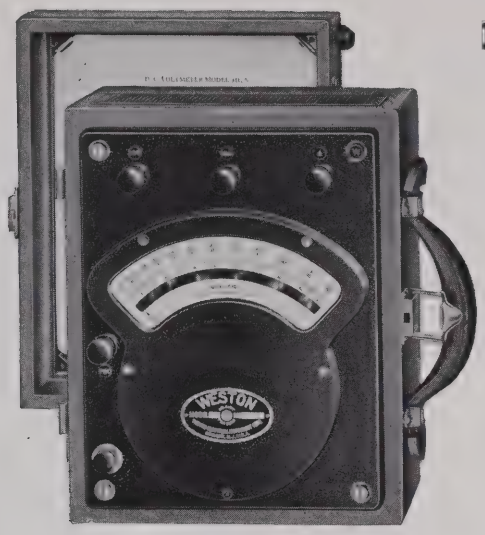

MODEL 341

MODEL 370

A-C AND D-C VOLTMETERS — MODEL 341

Rated Accuracy 0.25% of Full Scale Value, Horizontal Position.....Scale 5.25" (133 mm)
Type: Electrodynamometer *(Shielded from External Magnetic Fields)*

Size { 8½ x 10⅜ x 5⅞" / 216 x 264 x 147 mm .....Approx. Weight { 11 lbs. / 5 kgs.

Power Consumption: (300/150 and 300/150/75 volt instruments) 150 volt range at 115 volts, 60 cycles—4.0 watts, 4.0 volt-amperes.

A true electrodynamometer, self contained, and suitable for d-c and a-c voltage measurements. All instruments are calibrated at 25°C (77°F). A certificate provided with each instrument supplies all essential data, true temperature correction factors and true frequency correction factors. Locking type contact key is supplied, except for the very low range instruments where contact key is omitted.

Rated Accuracy: Instruments with all ranges of 7.5 volts and above have a rated accuracy of 0.25% of full scale value. Instruments with one or more ranges below 7.5 volts have a rated accuracy of 0.5% of full scale value.

Wave Form: True rms voltage will be measured when used on common wave form since the wave form error, in general, is exceedingly small and practically unreadable. Even under abnormal conditions, the wave form error of frequency compensated voltmeters is negligible. The standard voltmeter has small errors under abnormal conditions, but they are usually less than the rated accuracy.

Frequency: All ranges can be used from direct voltage to 125 cycles. On some ranges, it may be necessary to apply a correction factor to reduce the frequency error to a negligible value above 66 cycles. However, at nominal 60 cycles the frequency influence is negligible over the span of 54 to 66 cycles. This is less than the 0.1% maximum allowed in the ASA C39.1 standard for this frequency span.

While the general frequency span is expressed as direct voltage to 125 cycles, it must be recognized that a responsive mechanism will tend to follow the pulsations of a very low order. Thus, measurements at artificially produced frequencies as low as 5 or 10 cps become impractical; the lowest frequency on which the standard instrument will function well is about 15 cps. Requirements for measurement of lower frequencies require special structures with abnormal damping. Correspondence is invited.

Range	Scale Div.	Approx. Sensitivity (Ma)	Approx. Res. (Ohms)
*†3/1.5	150	500	6/3
*†7.5/3	150	500	15/6
†15/7.5	150	280	54/27
30/15	150	150	200/100
75/30	150	65	1150/460
120/60	120	45	2660/1330
150/75	150	45	3340/1670
300/150	150	45	6680/3340
600/150	150	30	20000/5000
600/300	150	30	20000/10000
300/150/75	150	45	6680/3340/1670
600/300/150	150	30	20000/10000/5000
750/300/150	150	30	25000/10000/5000

**Rated accuracy 0.50% of full scale value.*

†Provided with 5 foot leads. No contact key.

All ranges listed above are self-contained. For higher ranges, Model 311 Potential Transformers or external multipliers can be used. See page 11.

High Frequency Compensated Instruments

Instruments are available, at a surcharge, compensated for frequencies up to 2500 cps. Rated accuracy is 0.25% of full scale value.

D-C to 500 cps: As many as three ranges can be supplied self contained, providing the ratio of the highest to lowest range is not greater than 5. The lowest practical range is 7.5 volts, the highest 750 volts. The frequency error is negligible from direct voltage to 250 cps and less than 0.13% of full scale value to 500 cps.

D-C to 1000 cps: As many as three ranges can be supplied self contained, providing the ratio of highest to lowest range is not greater than 4. The lowest practical range is 10 volts, the highest 750 volts. The frequency error is negligible from direct voltage to 500 cps and less than 0.13% of full scale value to 1000 cps.

D-C to 2500 cps: Only single and double ranges can be supplied self contained. The ratio of the two ranges must not be greater than 2 to 1. The lowest practical range is 25 volts; the highest is 750 volts. A minimum of approximately 11 watts is required for single range instruments or the low range of a double range unit. The frequency error is negligible from direct voltage to 1000 cps and less than 0.13% of full scale value to 2500 cps.

(Continued Next Page)

TYPICAL FULL SIZE SCALES

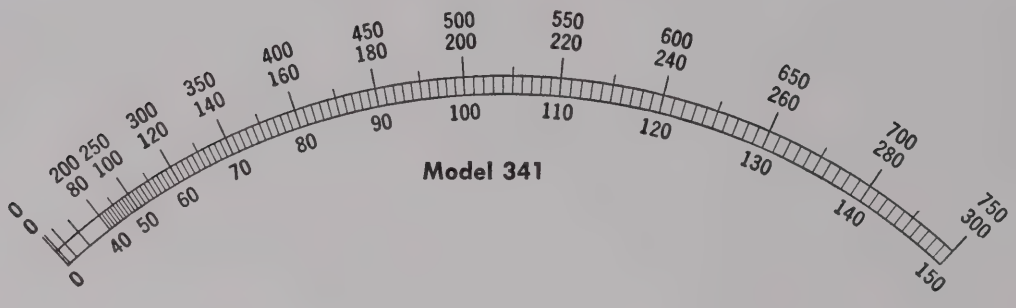

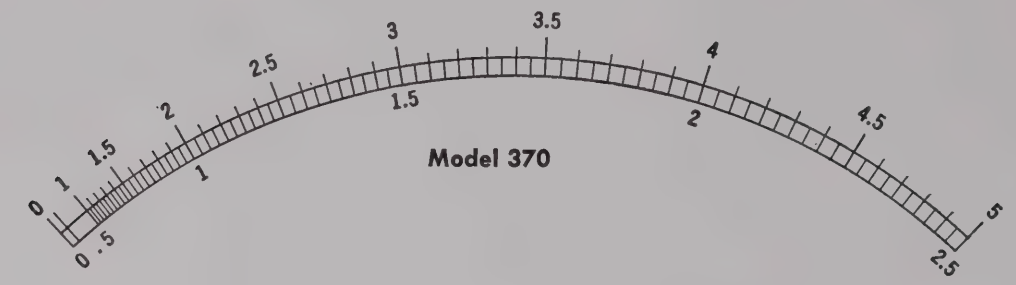

A-C AND D-C AMMETERS AND MILLIAMMETERS — MODEL 370

Rated Accuracy 0.25% of Full Scale Value, Horizontal Position.....Scale 5.25" (133 mm)

Type: Electrodynamometer

(Shielded from External Magnetic Fields)

Size { 8½ x 10⅜ x 5¾" / 216 x 264 x 146 mm } .....Approx. Weight { 10 lbs. / 4.5 kgs }

Power Consumption: 5 ampere range at 5 amperes, 60 cycles—4.5 watts, 4.7 volt-amperes.

Designed for a-c and d-c current measurements, these instruments are true electrodynamometers. All ranges above 0.5 ampere and all double range combinations are of the shunted moving coil type. All instruments are calibrated at 25°C (77°F) and have a rated accuracy of 0.25% of full scale value. A certificate provided with each instrument supplies all essential data.

They will measure true rms current on commercial wave forms since the wave form error is unreadable. Even under abnormal conditions, the wave form error is negligible.

Frequency: All ranges can be used from direct current to 125 cycles per second. The frequency error over this span is negligible.

Instruments are available, at a surcharge, compensated for frequencies up to 1000 cps for all ranges and to 2500 cps for ranges of 30 ma and higher. For the 1000 cps span, the frequency error is negligible to 500 cps and less than 0.13% of full scale value to 1000 cps. For the 2500 cps range the frequency error is negligible to 500 cps, less than 0.13% of full scale value to 1000 cps and less than 0.25% of full scale value to 2500 cps.

While the general frequency span is expressed as direct current to 125 cycles, it must be recognized that a responsive mechanism will tend to follow the pulsations of a very low order. Thus, measurements at artificially produced frequencies as low as 5 or 10 cps become impractical; the lowest frequency on which the standard instrument will function well is about 15 cps. Requirements for measurement of lower frequencies require special structures with abnormal damping. Correspondence is invited.

A-C and D-C Ammeters — Model 370

Range	Approx. Res. Ohms	Approx. Ind. mh	Scale Div.
1/.5	2.2/7.6	3.6/14.4	100
2/1	.68/2.2	.92/3.7	100
5/2.5	.18/.48	.15/.59	100
10/5	.072/.18	.037/.15	100
20/10	.033/.077	.0090/.035	100

A-C and D-C Milliammeters — Model 370

*Range	Approx. Res. Ohms	Approx. Ind. mh	Scale Div.
30/15	915/1470	2250/560	150
60/30	290/430	115/450	150
150/75	44/110	37/150	150
300/150	13/12	4.1/17	150
500/250	4.2/5.1	1.8/7.0	100

** Single range milliammeters can be supplied in ranges from 15 to 500 milliamperes.*

All ranges listed above are self-contained. For higher ranges use Model 461, Type 2 or Model 327 Types 1 or 2 Current Transformers.

MODELS 310 and 329

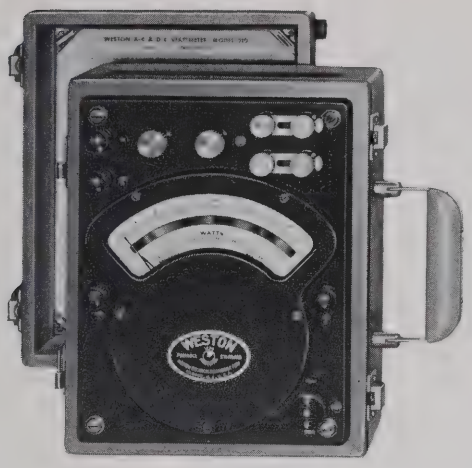

MODEL 310

Model 310

Rated Accuracy 0.25% of Full Scale Value, Horizontal Position
Scale 5.25" (133 mm)

Type: Electrodynamometer
(Shielded from External Magnetic Fields)

Size { 8½ x 10⅜ x 5⅞" / 216 x 264 x 147 mm

Approx. Weight { 12 lbs. / 5.4 kgs.

Power Consumption: Forms 1 and 3—Potential Circuit at 115 volts, 60 cycles—2.9 watts, 2.9 volt-amperes. Current Circuit at 5 amperes, 60 cycles—0.81 watt, 0.95 volt-ampere.

Form 2: Potential Circuit at 115 volts, 60 cycles—4.4 watts, 4.4 volt-amperes. Current Circuit at 5 amperes, 60 cycles—3.5 watts, 3.9 volt-amperes.

MODEL 329

D-C AND SINGLE PHASE A-C WATTMETERS — MODEL 310

Model 310 is a true electrodynamometer used for a-c and d-c power measurements. It will measure true rms values when used on commercial wave forms since the wave form error, in general, is exceedingly small and practically unreadable. Even under abnormal conditions, the wave form error of Forms 1 and 3 wattmeters is negligible. The Form 2 wattmeters have small errors under abnormal conditions but they are usually less than the rated accuracy.

All instruments are calibrated at 25°C. A certificate provided with each instrument supplies all essential data.

DESCRIPTION OF FORMS

Form 1: For general service on d-c, and on frequencies to 125 cycles. Not compensated for instrument losses, ranges based on product of normal volts and amperes. Compensated for normal temperature changes. Off position for potential circuit is provided on reversing switch.

Form 2: For low power factor service. Potential circuit power compensation is provided as ranges are usually quite low, and the power consumed by the instrument is therefore an appreciable portion of the total. Switch is provided in potential circuit to omit or include compensation. Ranges are based on 20% of the product of maximum volts and amperes. Frequency coverage same as Form 1. Special instruments, without potential circuit power compensation can be built, at a surcharge, to cover a frequency span up to 1000 cycles with the standard accuracy.

Form 3: Similar to Form 1, except that potential circuit is designed for use on higher frequencies and therefore is not so well compensated for temperature changes as Form 1. On 50 volt range, frequency coverage is from 25 to 600 cycles; 100 volts and above, 25 to 1200 cycles. Special instruments can be built, at a surcharge, to cover a frequency span up to 2500 cycles with an accuracy within ½% above 1200 cycles.

SUMMARY

Specify Form Desired When Ordering

	Form 1	Form 2	Form 3
Compensated for large temperature changes	yes	no	no
Compensated for potential circuit power	no	yes	no
Equipped with off position switch	yes	no	yes
†Current circuit overload capacity	100%	none	100%
*Potential circuit overload capacity	50%	none	50%
Frequency range for normal accuracy	d-c & 25-125	d-c & 25-125	d-c & 25-600; 100V & above, d-c & 25-1200

†100/50 ampere range 50% overload only.
**Applies for ranges up to 400 volts; above 400 volts overload is 20%.*

Model 310 — Form 1 or 3 — For General Use

Approximate Sensitivity at Normal Voltage—22 Ma.

Volts Normal	Amperes Normal High	Amperes Normal Low	Watt Ranges High Current Range	Watt Ranges Low Current Range	Range Figured	Scale Div.
200/100/50	1	.5	200/100/50	100/50/25	50	100
(Max. 300/150/75)	2	1	400/200/100	200/100/50	100	100
	2.5	1.25	500/250/125	250/125/62.5	125	125
	5	2.5	1000/500/250	500/250/125	250	125
	10	5	2000/1000/500	1000/500/250	500	100
	20	10	4/2/1 kw	2/1/.5 kw	1 kw	100
	40	20	8/4/2 kw	4/2/1 kw	2 kw	100
	60	30	12/6/3 kw	6/3/1.5 kw	3 kw	150
	100	50	20/10/5 kw	10/5/2 5 kw	5 kw	100
500/200/100	1	.5	500/200/100	250/100/50	50	100
(Max. 600/300/150)	2	1	1000/400/200	500/200/100	100	100
	2.5	1.25	1250/500/250	625/250/125	125	125
	5	2.5	2500/1000/500	1250/500/250	250	125
	10	5	5000/2000/1000	2500/1000/500	500	100
	20	10	10/4/2 kw	5/2/1 kw	1 kw	100
	40	20	20/8/4 kw	10/4/2 kw	2 kw	100
	60	30	30/12/6 kw	15/6/3 kw	3 kw	150
	100	50	50/20/10 kw	25/10/5 kw	5 kw	100

(Continued Next Page)

TYPICAL FULL SIZE SCALE

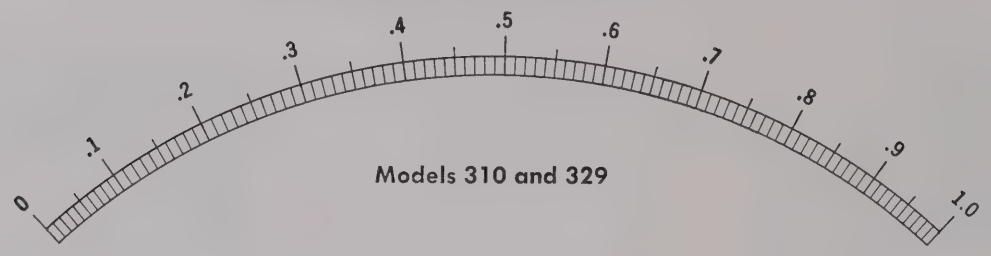

Model 310 — Form 2 — For Low Power Factor Use

Volts Max.	Amperes Max. High	Amperes Max. Low	Watt Ranges High Current Range	Watt Ranges Low Current Range	Approx. Sensitivity Ma	Range Figured	Scale Div.
150/75	*1	*.5	30/15	15/7.5	35	15	150
	2	1	60/30	30/15	35	30	150
	5	2.5	150/75	75/37.5	48	75	150
	10	5	300/150	150/75	48	150	150

**This range is not compensated for potential circuit power and is useful for special conditions only. Power required for instrument operation will often equal, and in some cases be more than, the power to be measured. Correspondence giving full particulars of the problem is usually required before placing the order.*

All ranges listed are self-contained. Higher current ranges are obtained by using a 5 ampere range in conjunction with Model 461, Type 2 or Model 327, Types 1 or 2 Current Transformers. Higher potential ranges are obtained with multipliers or Model 311 Potential Transformers. See page 11.

POLYPHASE WATTMETERS — MODEL 329

Rated Accuracy 0.50% of Full Scale Value,
Horizontal Position .....Scale 5.25" (133 mm)
Type: Electrodynamometer
(Shielded from External Magnetic Fields)

Size { 9½ x 10½ x 8-1/16" / 241 x 267 x 205 mm .....Approx. Weight { 18 lbs. / 8 kgs.

POWER CONSUMPTION PER ELEMENT

Potential Circuit at 115 volts, 60 cycles—3.4 watts, 3.4 volt-amperes.
Current Circuit at 5 amperes, 60 cycles—0.80 watt, 0.91 volt-ampere.

Model 329 Polyphase Wattmeters consist of two electrically independent single phase wattmeters having their movable coils mounted on a common shaft, with each coil surrounded by its own system of field coils. Each system may be used independently with scale errors of less than ½%, which is of great importance for measurements on unbalanced polyphase circuits, or on balanced three phase circuits at low power factors. Model 329 Polyphase Wattmeters are made in three types: Form 1, 2 and 3, with characteristics comparable to those of Model 310 Wattmeters. Correspondence is necessary on all Form 2 requirements. Specify Form desired when ordering.

Model 329 is made with double current and triple voltage ranges. Current ranges are changed by means of links, and voltage ranges have independent binding posts. Power measurements on direct current—single phase a-c, two or three wire circuits —two phase, three or four wire circuits—and on three phase circuits, may be made directly. All instruments are provided with an "On" and "Off" switch in the potential circuit. Instruments are calibrated at 25°C. A certificate provided with each instrument supplies all essential data.

Model 329 — Form 1 or 3

Approximate Sensitivity Per Element at Normal Voltage—26 Ma.

Volts Normal	Amperes Normal High	Amperes Normal Low	Watt Ranges High Current Range	Watt Ranges Low Current Range	Range Figured	Scale Div.
200/100/50	5	2.5	2000/1000/500	1000/500/250	500	100
(Max. 300/150/75)	10	5	4/2/1 kw	2/1/.5 kw	1 kw	100
	20	10	8/4/2 kw	4/2/1 kw	2 kw	100
500/200/100	5	2.5	5000/2000/1000	2500/1000/500	500	100
(Max. 600/300/150)	10	5	10/4/2 kw	5/2/1 kw	1 kw	100
	20	10	20/8/4 kw	10/4/2 kw	2 kw	100

All ranges listed are self-contained. Higher current ranges are obtained by using a 5 ampere range in conjunction with two Model 461, Type 2, or two Model 327, Type 1 or 2, Current Transformers. Potential ranges are extended by using multipliers or two Model 311 Potential Transformers. See page 11.

MODELS 338 and 372

MODEL 338

MODEL 372

POWER FACTOR METER — MODEL 338

Rated Accuracy, Horizontal Position, 25-125 cycles—.005 pf, 125-500 cycles—.01 pf, 500-1000 cycles—.02 pf
Scale 5.25" (133 mm)

Type: Electrodynamometer
(Shielded from External Magnetic Fields)

Size { 8½ x 10⅜ x 5⅞" / 216 x 264 x 149 mm } ..... Approx. Weight { 12 lbs. / 5.4 kgs.

Power Consumption: Single Phase—Potential Circuit at 115 volts, 60 cycles—5.3 watts, 6.0 volt-amperes. Current Circuit at 5 amperes, 60 cycles—2.4 watts, 3.3 volt-amperes.

Polyphase—Potential Circuit (each) at 115 volts, 60 cycles—5.3 watts, 5.3 volt-amperes. Current Circuit at 5 amperes, 60 cycles—2.4 watts, 3.3 volt-amperes.

Guaranteed accuracy is maintained for currents from 20% to 150% of rated value. Where necessary to extend the current ranges of either the single or polyphase instrument, the use of Model 327 Type 1 or 2 or Model 461 Type 2 current transformers are recommended. Likewise, potential ranges can be extended by using Model 311 potential transformers, one being required for single phase use and two for polyphase. All instruments are calibrated at 25°C. A certificate provided with each instrument supplies essential data.

Range
.5-1-.5 or .3-1-.8
.3-1-.3 or .9-1-.9

Model 338 Polyphase Instruments are normally supplied with two potential ranges for use on 100 to 130 and 200 to 260 volt circuits and with double current ranges of either 5/2.5 or 10/5 amperes. These instruments use the system phase relation for operation and are suitable for use on frequencies from 25 up to 125 cycles. Indications are correct on balanced loads only. When ordering specify whether for 3 or 4 wire circuits, 2 or 3 phase. Also, indicate which of the two current combinations is preferred.

Model 338 Single Phase Instruments are adjusted for operation at specific frequencies only and are available in two forms, either single voltage double frequency or double voltage single frequency. The prices indicated for the single phase instruments are based on conventional voltages such as 100 to 130 or 200 to 260 volts with double current ranges of either 5/2.5 or 10/5 amperes and frequencies of either 25 or 60 cycles. Correspondence is invited on requirements for measurements above 500 cycles.

TYPICAL FULL SIZE SCALE

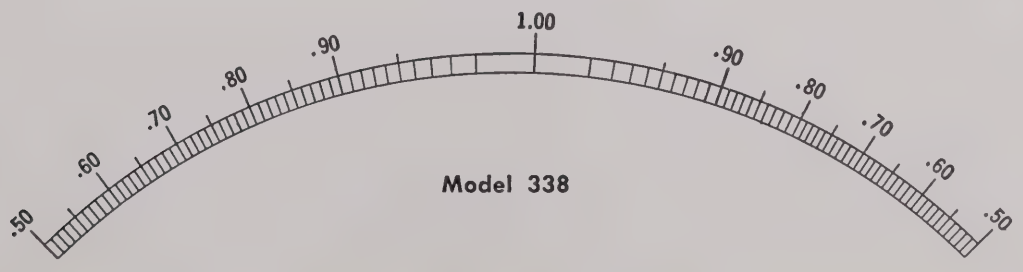

Model 338

(Continued Next Page)

TYPICAL FULL SIZE SCALE

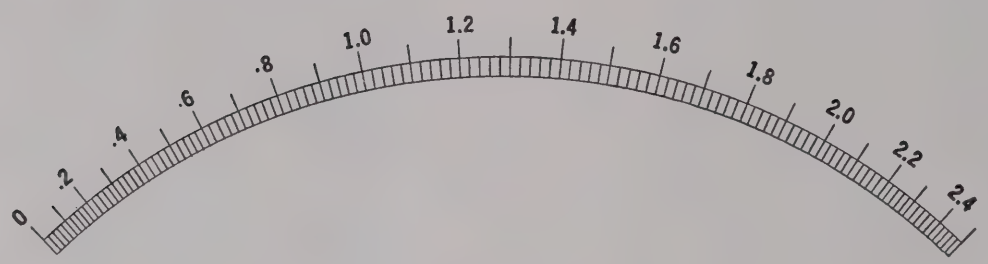

Model 372

MICROFARAD METER — MODEL 372

Rated Accuracy, Horizontal Position, 1% of Full Scale Value 0.3 Microfarad and above, 0.50% of Full Scale Value up to 0.3 Microfarad
Scale 5.25" (133 mm)

Type: Electrodynamometer
(Shielded from External Magnetic Fields)

Size { 8½ x 10⅜ x 5⅞" / 216 x 264 x 149 mm } ..... Approx. Weight { 16 lbs. / 7.3 kgs. }

CURRENT CONSUMPTION

60 cycle, 100-130 volt instruments require approx. 0.15 ampere
500 cycle, 100-130 volt instruments require approx. 0.35 ampere
500 cycle, 200-250 volt instruments require approx. 0.20 ampere

Quickly and accurately indicates capacitance of condensers, and telephone, telegraph and power lines and cables. Regularly made for use on 50, 60 or 500 cycle circuits of either 100-130 or 200-250 volts. Stated accuracies apply under the following conditions: When the applied potential is between 100-130 or 200-250 volts respectively and the frequency between 45-55 cycles or 55-65 cycles, according to the normal range of the meter, and the phase angle of the condenser being measured is not more than 3 electrical degrees.

All instruments are calibrated at 25°C. A certificate provided with each instrument supplies all essential data. All ranges supplied with a non-locking contact key to be pressed when taking readings.

50 or 60 Cycles, 100 to 130 Volts

Range Microfarads	Scale Divisions
.05	100
.1	100
.3	150
.5	100
1	100
2	100
3	150
5	100
10	100

500 Cycles, 100 to 130 Volts

Range Microfarads	Scale Divisions
.015	150
.025	125
.05	100

500 Cycles, 200 to 250 Volts

Range Microfarads	Scale Divisions
*.001	100
.005	100
.0075	150
.015	150

1000 Cycles, 200 to 250 Volts

Range Microfarads	Scale Divisions
*.0005	100

**Imposes a potential of 600 volts on the condenser under test.*

MODELS 339 and 480

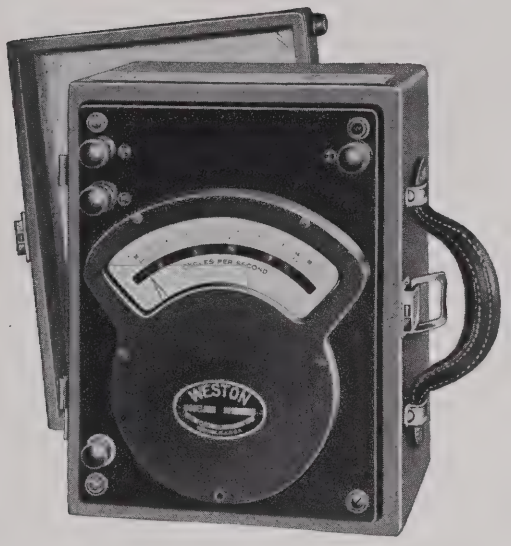

MODEL 339

MODEL 480

FREQUENCY METER — MODEL 339

Rated Accuracy 0.40% of mid-scale frequency plus 0.40% of frequency span, Horizontal Position.....Scale 5.25" (133 mm)

Type: Movable Iron
(Shielded from External Magnetic Fields)

Size { 8½ x 10⅜ x 8⅛" / 216 x 264 x 203 mm .....Approx. Weight { 18 lbs. / 8.2 kgs.

Power Consumption: *Single Voltage Range Type*—115 volt range at 115 volts center scale—1.5 volt-amperes; end scale—3 volt-amperes. *Double Voltage Range Type*—115 volt range at 115 volts center scale—5.7 volt-amperes; end scale—6.9 volt-amperes 230. For 230 volt range at 230 volts center scale—11.5 volt-amperes; end scale—12.4 volt-amperes.

Model 339 Frequency Meters are made for direct connection to circuits of 100-130 or 200-260 volts and are available in a wide variety of frequency ranges. The mechanism is of the crossed coil, iron vane ratio meter type. The indication is a result of the ratio of the currents in two pairs of fixed coils at right angles and is a function of changes in inductive—capacitive reactance. By using this type of circuit, the effect of distorted wave forms due to harmonics is almost entirely eliminated. The instrument is practically independent of fluctuations in the applied voltage over the stated voltage range.

All instruments are calibrated at 25°C. A certificate provided with each instrument supplies all essential data.

Voltage ranges can only be extended by means of a transformer. Although a Model 311 Potential Transformer can be used, a transformer of this precision is not required.

Range Cycles	Accuracy Cycles	Scale Divisions
20–30	.14	100
23.5–26.5	.11	60
40–60	.28	100
40–70	.34	60
50–70	.32	100
56–64	.27	80
350–450	2.0	100
375–425	1.8	100
700–900	4.0	100

Correspondence is invited for any other frequency band.

TYPICAL FULL SIZE SCALE

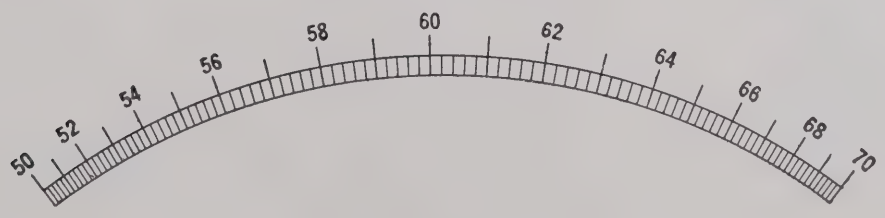

Model 339

(Continued Next Page)

TYPICAL FULL SIZE SCALE

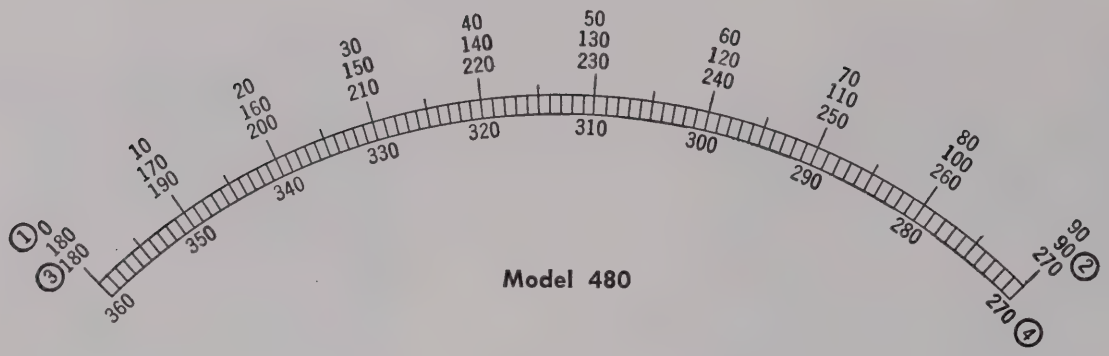

Model 480

PHASE ANGLE METER — MODEL 480

Rated Accuracy 1° at 110 volt range, 2° on other ranges, Horizontal Position.....Scale 5.25" (133 mm)

Type: Electrodynamometer
(Shielded from External Magnetic Fields)

Size { 8⅝ x 10⅝ x 9" / 219 x 270 x 229 mm .....Approx. Weight { 23 lbs. / 10.4 kgs.

Power Consumption: Potential Circuit—110 volt range at 115 volts, 60 cycles—6.8 watts, 8.8 volt-amperes. Current Circuit—5 ampere range at 5 amperes, 60 cycles —1.6 watts, 1.8 volt-amperes.

The Model 480 Phase Angle Meter measures the phase angle difference between a current and a voltage, or between two currents, directly in degrees. It is especially suited for checking and setting relays, and for measuring phase relation on the phasing relay of network protectors as in Railway Signal and Central Station practice. It is also used for determining the phase balance of polyphase circuits, or for measuring phase angle wherever desired.

The 1.25 ampere coil is designed to give sufficient torque at 0.2 ampere to obtain accurate readings on balanced relays used for ground protection.

The scale has four calibrations of 90° each, from 0 to 360, with a quadrant switch provided to determine in which of the quadrants the phase angle lies.

All instruments are adjusted for operation at specific frequencies only, normally 25, 50, 60 or 400 cycles. Correspondence is invited on requirements for other frequencies.

All instruments are calibrated at 25°C. A certificate provided with each instrument supplies all essential data.

Volts	Amperes Nor.	Amperes Max.	Frequency Cycles	Scale
*110/55/15	5/2.5	7.5/3.75	60 and 25	0-360°
**220/110/65/15	2.5/1.25	6/3	60	0-360°
220/110/55	5/2.5	7.5/3.75	60	0-360°

**Provided with a second switch for selection of frequency range.*

***Recommended for measuring phase relation on the phasing relay of network protectors.*

All ranges listed are self-contained. Higher current ranges are obtained by using a 5 ampere range in conjunction with Model 461 Type 2, or Model 327 Types 1 or 2 Current Transformers. Higher potential ranges are obtained with Model 311 Potential Transformers. See page 11.

NOTE: These instruments are calibrated for use in a horizontal position and are not recommended for use in any other position.

RESISTORS OR MULTIPLIERS

External resistors or multipliers are of different types since there are three controlling factors in their design.

1. Full scale watts to be dissipated—influences the size.
2. Full scale voltage to be applied—influences the internal clearances and also the size.
3. Accuracy requirements—high accuracy frequently requires elements of a type differing from those which might be used with instruments of lesser accuracy.

As a result of these factors it is impossible to list the different combinations of external resistors, therefore, correspondence is invited.

For a-c voltage measurements beyond 750 volts and in many cases beyond 300 volts, it is preferable to use a conventional 150 volt instrument with a suitable potential transformer.

When a multiplier is to be supplied with the purchase of an instrument, give complete voltage data. Multipliers should preferably show they have multiplying constants of 2, 5 or 10 times the instrument range with which they are to be used.

When ordering multipliers for existing instruments, specify model, serial number and instrument range as well as the multiplying constant required. If possible give the instrument sensitivity.

TRANSFORMERS FOR USE WITH PORTABLE STANDARDS

MODEL 311 POTENTIAL TRANSFORMER

Size { 8⅛ x 7½ x 8¼" / 206 x 191 x 210 mm } Approx. Weight { 25 lbs. / 11 kgs. }

Potential Transformers Model 311 Types 1 and 2 are used with voltmeters and wattmeters without correction curves for normal accuracies. For precise use, correction curves can be supplied at a surcharge.

Types 1 and 2 have double primary ranges with a ratio of 2 to 1, obtained by connecting separate primary windings in either series or parallel by means of links. These transformers are provided with four binding posts, two for connection to the line and two for connection to the meter.

Model 311 is supplied in a polished oak case with removable cover and leather carrying strap.

Type 2
Max. Secondary Burden, 25 Volt-Amperes
Frequency 50 to 125 Cycles

Ratios	
6900/3450 to 115	9000/4500 to 150
4600/2300 to 115	6000/3000 to 150

Type 1
Max. Secondary Burden, 15 Volt-Amperes,
Frequency 25 to 125 Cycles

Ratios	
Normal Volts	Maximum Volts
2300/1150 to 115	3000/1500 to 150
460/230 to 115	600/300 to 150

MODEL 311

MODEL 327 CURRENT TRANSFORMER

Size { 9-15/16 x 8⅜ x 3" / 252 x 213 x 76 mm } Approx. Weight { 12½ lbs. / 5.7 kgs. }

Inserted Primary Opening 2⅞" (73 mm) Diameter

The high accuracy of Model 327 Current Transformers, which employ special nickel alloy cores, makes them ideal for laboratory as well as industrial uses. Type 2 transformers differ from Type 1 in that they provide maximum precision. Model 327 is provided with a short circuiting switch and is housed in a black bakelite case with a leather carrying handle.

Ranges, Amperes
*1200/*600/*400/*300/*200/100/50/20/10 Pri. to 5 Sec.

**These ranges are obtained by inserting one, two, etc., turns, respectively, of the primary through the core opening; other ranges are on binding posts.*

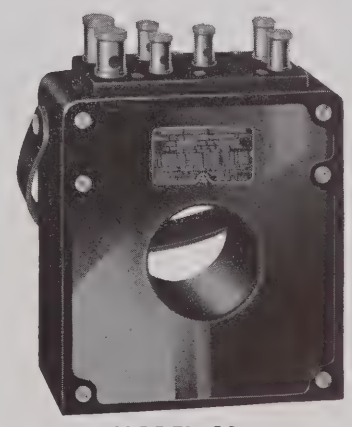

MODEL 327

MODEL 461 CURRENT TRANSFORMER

Size { 8 x 6⅝ x 2¾" / 203 x 170 x 70 mm } Approx. Weight { Type 2-8.37 lbs. 3.81 kgs. / Type 5-7.81 lbs. 3.54 kgs. }

Inserted Primary Opening 2.12" (54 mm) Diameter

This is a general purpose current transformer providing wide varieties of ranges, with adequate accuracy for most industrial measurements. Supplied in black bakelite case.

Type 2, which has a nickel alloy core and corresponding low phase angle, is preferable for wattmeters as well as ammeters. Type 5 is similar to Type 2, but designed primarily to standardize ammeters, particularly in the lower ranges, but can be used with wattmeters and ammeters to measure load currents and power.

Ranges, Amperes

Types 1 & 2	*800/*400/*200/100/50/20/10 Pri. to 5 Sec.
	*1000/*500/*250/100/50/25/10 Pri. to 5 Sec.
Type 5	*500/*250/*100/50/25/10/5/2.5/1/0.5 Pri. to 5 Sec.

**These ranges are obtained by inserting one, two, etc., turns, respectively, of the primary through the core opening; other ranges are on binding posts.*

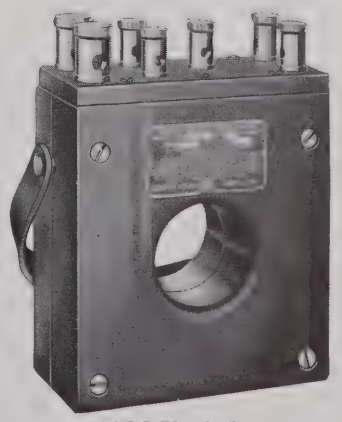

MODEL 461

DISTRICT OFFICES

BOSTON	KNOXVILLE
BUFFALO	LOS ANGELES
CHICAGO	MILWAUKEE
CINCINNATI	NEWARK, N. J.
CLEVELAND	NEW YORK
DAYTON	PHILADELPHIA
DETROIT	SAN DIEGO
HARRISBURG	SAN FRANCISCO

WASHINGTON, D. C.

WESTON REPRESENTATIVES

ALBANY–Carse Electric Corporation
AMARILLO–Butler and Land
ATLANTA–E. A. Thornwell, Inc.
BALTIMORE–Thomas H. Closs
CHARLOTTE, N. C.–Ranson, Wallace & Company
DALLAS–Butler and Land
DENVER–Peterson Company
HOUSTON–Lynn Elliott Company
JACKSON–Curtis H. Stout, Inc.
JACKSONVILLE–Ward Engineering Co., Inc.
KANSAS CITY, MO.–C. B. Fall Co., Hickman Mills
KNOXVILLE–A. R. Hough
LITTLE ROCK, ARK.–Curtis H. Stout, Inc.
MEMPHIS–Curtis H. Stout, Inc.
MIDDLETOWN, CONN.–Dittman & Greer, Inc.
MINNEAPOLIS–Pinkney & Hine
NEW ORLEANS–W. J. Keller
ORLANDO, FLA.–Ward Engineering Co., Inc.
PHOENIX–J. E. Redmond Supply Co.
PITTSBURGH–Russell F. Clark Co.
RICHMOND, VA.—Ranson, Wallace & Co.
ROCHESTER, N. Y.–H. J. Rittenhouse Company
SEATTLE–Eicher & Company
SHREVEPORT–Curtis H. Stout, Inc.
ST. LOUIS–C. B. Fall Company
SYRACUSE–Naylor Electric Company
TULSA, OKLA.–Riddle and Hubbell Company

CANADA

MONTREAL–Daystrom, Limited
TORONTO–Daystrom, Limited

EXPORT and OVERSEAS

Daystrom International
100 Empire Street
Newark 12, N. J.

Printed in U.S.A. 7-58

CIRCULAR 06-201-A
FEBRUARY 1959

WESTON

A-C AND D-C
PORTABLE INSTRUMENTS
Models 931–432–433–455

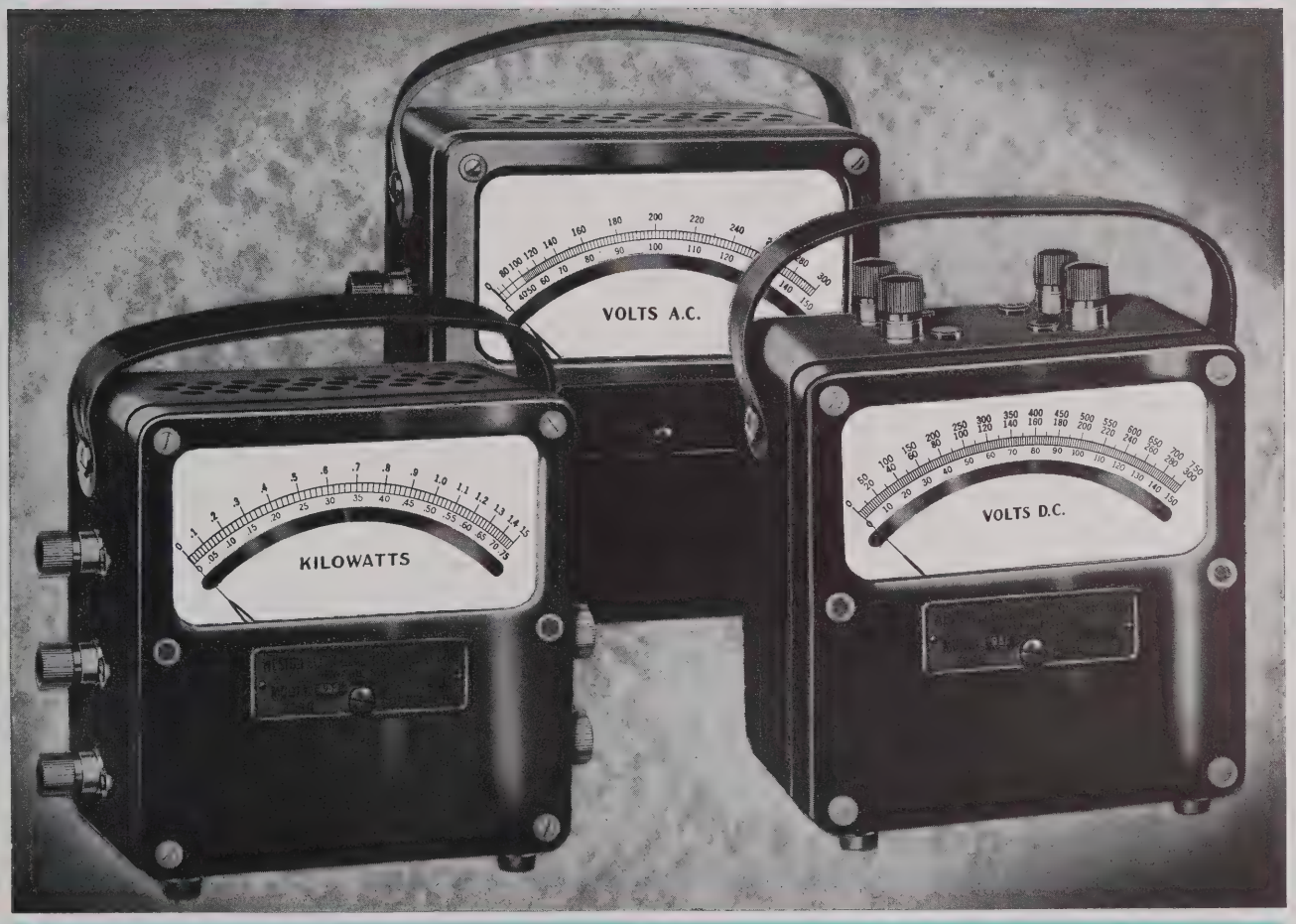

WESTON INSTRUMENTS, DIVISION OF DAYSTROM, INCORPORATED
Newark 12, New Jersey, U. S. A.

INTRODUCTION

Engineering educationals, utilities, plant maintenance groups, and contractors have found this complete line of matched portables invaluable for laboratory, production and general a-c and d-c testing. These instruments are moderate in cost, compact, light weight and long scaled, thereby achieving the optimum in test instrument design—portability, readability, sustained high accuracy.

Except where extreme sensitivity is needed such as in thermo instruments, the popular Model 430 has been replaced by what should be an even more popular and useful instrument—the Model 931. A new self-shielding mechanism in the Model 931 D-C Instruments provides such high protection that the magnetic field created by a conductor carrying 7,000 amperes at a distance of three feet from the instrument would cause a temporary error in indication of less than ½ of 1%. This error is considerably less than that allowed by the American Standards Association, even though the test conditions are more than three times as severe.

All instruments are hand calibrated with direct comparison to accurate reference standards, and are equipped with mirror scales and knife edge pointers to eliminate parallax errors. Enclosed in molded bakelite cases having leather carrying straps, these instruments provide versatility of range—ruggedness—sustained high accuracy—and long term dependability. *They are calibrated for use in the horizontal position and should be used in that position if they are to give their best performance.*

The name Weston on electrical test instruments for more than half a century has been a guarantee of the highest standards of quality and reliability. Today, this world-wide acceptance has achieved a reputation for Weston which manifests itself in acknowledged leadership throughout the electrical industry.

For definitions of terms used and other detailed information, reference may be made to American Standards Association standard for Electrical Indicating Instruments C39.1-1955.

TYPICAL FULL SIZE SCALE

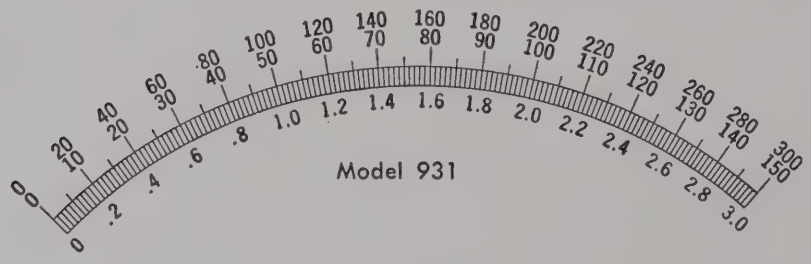

Portable Testing Shunts

Rated Accuracy 0.5% **Adjusted to 50 Millivolt Drop**

These shunts are for use with the Model 931 external shunt ammeters. They are made in single ranges only, with a drop of 50 millivolts at rated current.

For Use With 50 or 100 Division Scale Instruments

Range Amperes	Approx. Weight Lbs.	Kg.
1	0.8	0.36
2	0.8	0.36
5	0.8	0.36
10	0.8	0.36
20	0.8	0.36
50	0.8	0.36
100	1.0	0.45
200	1.0	0.45
500	1.5	0.68

For Use With 75 or 150 Division Scale Instruments

Range Amperes	Approx. Weight Lbs.	Kg.
1.5	0.8	0.36
3	0.8	0.36
7.5	0.8	0.36
15	0.8	0.36
30	0.8	0.36
75	1.0	0.45
150	1.0	0.45
300	1.3	0.59
750	1.9	0.86

DIRECT CURRENT PORTABLES
MODEL 931

Rated Accuracy 0.5%, horizontal position Scale 4.04" (103 mm)
Type: Self-Shielded Permanent Magnet Moving Coil
(Shielded from External Magnetic Fields)

Case Size { 3¼ x 5 x 5¼" / 83 x 127 x 133 mm } Approx. Weight { 2 lbs. / 0.9 kg }

Well Compensated For Temperature Changes

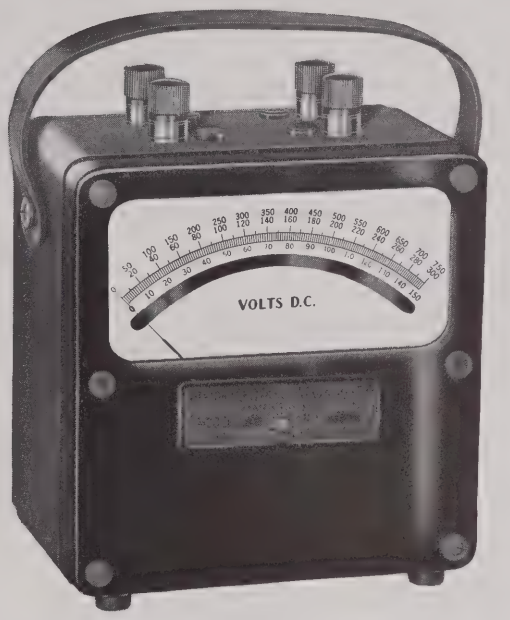

Model 931 Voltmeter

D-C VOLTMETERS

Self-Contained Ranges: Supplied self-contained for ranges to 1000 volts inclusive. Up to four ranges can be provided on binding posts, or eleven ranges with a switch and two binding posts. On multi-range instruments at 5000 ohms per volt sensitivity for which the highest range is 750 or 1000 volts, external boxes may be required. Correspondence is invited.

Range Extensions: On instruments of 1000 ohms per volt sensitivity, higher ranges to 5000 volts may be obtained with external resistors. Instruments with a sensitivity of 5000 ohms per volt can obtain ranges to 3000 volts with external resistors.

Range	Scale Div.
3	150
15	150
30	150
50	100
150	150
300	150
30/7.5/3	150
75/30/7.5	150
150/15/3	150
300/150/3	150
500/100/10	100
750/300/150	150

D-C AMMETERS

Self-Contained Ranges: Self-contained up to 50 amperes inclusive. A maximum of three self-contained ranges can be supplied on binding posts.

Range Extensions: For maximum flexibility and where one instrument is required to measure current of a few amperes to hundreds of amperes, a 50 mv instrument with 5' leads and a group of external shunts is recommended. External shunt ammeters are calibrated with scales to suit the shunts selected.

Range	Scale Divisions
50 mv.	100
50 mv.	150
1	100
1.5	150
3	150
5	100
7.5	150
15	150
30	150
50	100
5/0.5/0.05	100
5/2.5/0.5	100
10/1/0.1	100
10/5/1	100
15/3/0.15	150
15/3/1.5	150
25/2.5/0.5	100
25/10/2.5	100
30/15/3	150
50/5/0.5	100
50/10/2	100
50/20/5	100
50/25/10	100

D-C MILLIAMMETERS

Self-Contained Ranges: Up to four self-contained ranges can be provided on binding posts, a maximum of ten ranges can be provided with a switch and two binding posts.

Range	Approx. Res. Ohms	Scale Divisions
1	93	100
15	1.0	150
150	-----	150
3/0.3/0.03	-----	150
15/1.5/0.15	-----	150
150/15/1.5	-----	150
1500/150/15	-----	150
3000/300/30	-----	150

Single range milliammeters with ranges above 20 ma are shunted and have a drop of 50 mv ±5%.

D-C MICROAMMETERS

Self-Contained Ranges: Up to four self-contained ranges can be provided on binding posts, a maximum of ten ranges can be provided with a switch and two binding posts.

	HIGH RESISTANCE		LOW RESISTANCE
Range	Scale Div.	Approx. Res. Ohms	Approx. Res. Ohms
30	150	2300	490
100	100	2000	60
200	100	600	15

The less expensive high resistance type Model 931 Microammeters, having high torque, will have a service life greater than the low torque instruments, and should be used whenever sufficient energy is available for operation.

The low resistance type is designed to function on the lowest amount of energy consistent with reasonable performance.

ALTERNATING CURRENT PORTABLES
MODEL 433

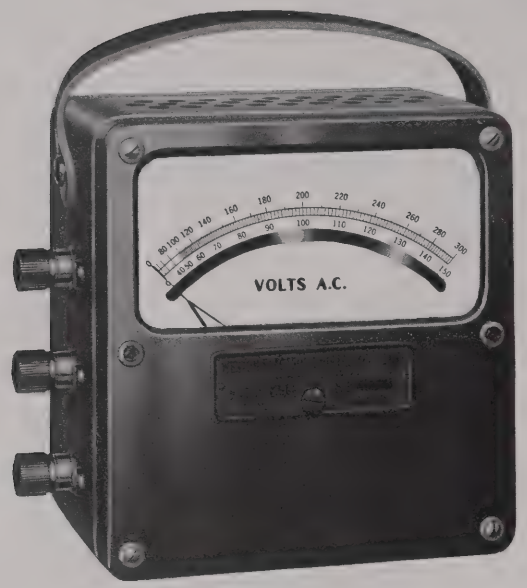

Rated Accuracy .75%, horizontal position Scale 4.04 (103 mm)

Type: Movable Iron

(Shielded from External Magnetic Fields)

Case Size { 3¼ x 5 x 5¼" / 83 x 127 x 133 mm } Approx. Weight { 2½ lbs. / 1.1 kgs. }

Well Compensated For Temperature Changes

A-C VOLTMETERS

Power Consumption: 150 volt range at 115 volts, 60 cycles—2.5 watts, 2.5 volt-amperes.

Standard Frequency Coverage: Alternating current at frequencies from 25 to 125 cycles.

High Frequency Coverage: At a surcharge, as many as 3 self-contained ranges can be supplied for a coverage of 25 to 1000 cycles providing the ratio of the highest to lowest range is not greater than 4. Lowest practical range is 15 volts, highest 750 volts. About 3.3 watts minimum is required to operate single range instruments or the low range of multi-range units.

Coverage to 2500 cycles is possible in single range voltmeters only, with an accuracy within 1¼%. Single ranges from 20 to 750 volts are practical and have an extension on the case to accommodate the additional resistance necessary. Approximately 10 watts are required for operation. Correspondence is necessary.

Self-Contained Ranges: Single, double and triple volt ranges, self-contained up to 750 volts.

Range Extension: Higher ranges obtained with multipliers or by using a Model 311 Potential Transformer in connection with a 150 volt range.

Range	Scale Div.	Approx. Res. Ohms
10	100	80
15	150	168
30	150	425
50	100	1140
75	150	2680
125	125	4400

(Continued)

A-C Voltmeters (Cont'd)

Range	Scale Div.	Approx. Res. Ohms
150	150	5300
250	125	18,200
300	150	22,000
10/5	100	40/20
20/10	100	160/80
30/15	150	336/168
60/30	150	850/425
*150/15	150	5300/530
150/75	150	5300/2680
300/150	150	22,000/11,000
450/300/150	150	33,000/22,000/11,000
**600/300/150	150	44,000/22,000/11,000
**750/300/150	150	55,000/22,000/11,000

**The low range of this combination has an accuracy of 3%.*

***These triple range voltmeters have an extension on the case to accommodate the additional resistance necessary.*

A-C AMMETERS

Power Consumption: 5 ampere range at 5 amperes, 60 cycles—0.50 watt, 0.52 volt-ampere.

Standard Frequency Coverage: Single, double and triple ranges for use on frequencies from 25 to 500 cycles.

High Frequency Coverage: Single and double range instruments can, subject to a nominal surcharge, be adjusted to cover a frequency span from 25 to 1000 cycles at the normal ¾% accuracy. At a slightly higher surcharge, these instruments can also be specially compensated to cover a frequency span of 25 to 2500 cycles, within ¾% accuracy. Correspondence regarding these special instruments is necessary.

Self-Contained Ranges: Single, double and triple ranges, self-contained up to 50 amperes. Triple range instruments have internal current transformer. All instruments have two binding posts, double and triple range instruments are provided with a range selector switch.

Range Extension: For ranges above 50 amperes, the Model 461 Current Transformer, Type 1, used in conjunction with a 5 ampere instrument is recommended.

Range	Scale Div.	Approx. Imp. Ohms
1	100	0.48
1.5	150	0.20
2	100	0.12
3	150	0.053
5	100	0.020
10	100	0.007
15	150	0.0038
25	125	0.0016
30	150	0.00063
50	100	0.00038
2/1	100	0.12/0.48
5/2.5	100	0.02/0.08
10/5	100	0.0083/0.028
20/10	100	0.004/0.0108
3/1.5/0.75	150	0.18/0.43/0.59
5/2.5/1	100	0.13/0.26/0.37
10/5/1	100	0.030/0.070/0.37
10/5/2.5	100	0.030/0.060/0.075
15/7.5/1.5	150	0.023/0.044/0.19
20/5/2	100	0.040/0.19/0.30
30/7.5/3	150	0.0090/0.036/0.040
50/20/5	100	0.0084/0.011/0.020
50/20/10	100	0.0073/0.0080/0.010

. . . Only The Most Commonly Used Ranges Are List

A-C MILLIAMMETERS—MODEL 433

Standard Frequency Coverage: Single and double ranges only, for use on frequencies from 25 to 500 cycles. Double range instruments have a range selector switch.

High Frequency Coverage: Subject to a nominal surcharge, these instruments can be adjusted to cover a frequency span from 25 to 1000 cycles at the normal ¾% accuracy. At a higher surcharge, adjustment can be made to cover a frequency span from 25 to 2500 cycles within ¾% accuracy. Correspondence regarding these special instruments is necessary.

Range	Scale Div.	Approx. Res. Ohms
15	150	1850
30	150	460
75	150	78
100	100	49
150	150	13
200	100	8.8
250	125	6.0
300	150	3.9
400	80	2.5
500	100	2.0
600	120	1.13
750	150	0.74
100/50	100	74/296
150/75	150	30/120
300/150	150	6.4/26
500/250	100	1.6/6.6

Rectifier Type A-C Voltmeters & Millivoltmeters

MODEL 932

Essentially the Model 931 with an appropriate rectifier. These instruments inherently indicate average values, however, they are usually calibrated in terms of the rms value of a sine wave. The Voltmeter has a range 300/150/75 at 1000 ohms per volt. Rated accuracy is 1½% from 15C to 35C. The rated accuracy of the Millivoltmeter is about 4% when used on 60 cycle sinusoidal wave forms. It is regularly supplied with ranges of 250/25 millivolts.

Thermo Type Instruments

MODEL 430

A permanent magnet moving coil mechanism with a Weston Thermo Element. Supplied as a Thermo Voltmeter, Thermo Ammeter or a Thermo Milliammeter. Correspondence invited.

TYPICAL FULL SIZE SCALE

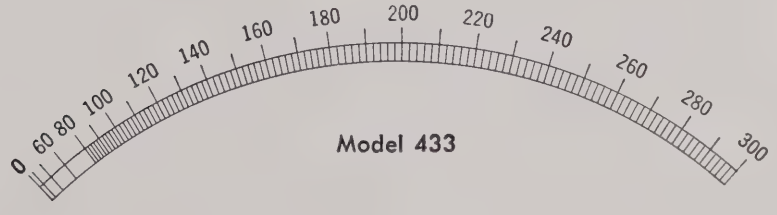

Model 433

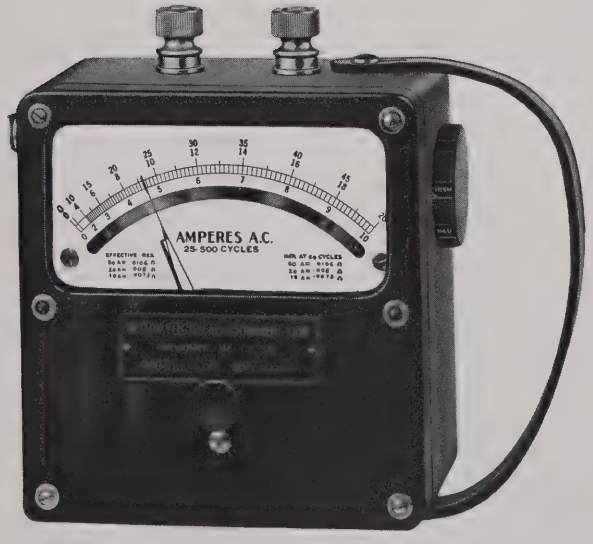

Model 433 with Adjustable Pointer Stop

Model 433 Ammeters with Adjustable Pointer-Stop

An adjustable pointer-stop is provided to facilitate measuring the starting current of a motor or other device which requires more current at the start than during normal operation.

The pointer-stop is located against the left side of the indicating pointer and is moved manually to position the indicating pointer just below the anticipated maximum starting current.

By moving the indicating pointer to this position, the distance the pointer travels, due to the starting current, is shortened and a reading can be obtained which is as near correct as possible with this form of indicating instrument.

ALTERNATING CURRENT PORTABLES
MODEL 432

D-C AND SINGLE PHASE A-C WATTMETERS

Rated Accuracy 0.5%, horizontal position Scale 4.04 (103 mm)
Type: Electrodynamometer
(Shielded from External Magnetic Fields)
Case Size { 3¼ x 5 x 5¼" / 83 x 127 x 133 mm Approx. Weight { 3¼ lbs. / 1.5 kgs.

Power Consumption: Potential circuit at 115 volts, 60 cycles—1.2 watts, 1.2 volt-amperes. Current circuit at 5 amperes, 60 cycles—0.65 watt, 0.68 volt-amperes.

Standard Frequency Coverage: Alternating current at frequencies from 25 to 125 cycles.

High Frequency Coverage: Can be compensated, at a surcharge, to cover a frequency span up to 1000 cycles at an accuracy within 0.5%; for 2500 cycles the accuracy is within 0.5% to 1000 cycles and 1% above 1000 cycles, except for the low power factor types where the accuracy above 1000 cycles is 1.5%. Correspondence required.

Self-Contained Ranges: Double voltage and single or double current ranges, self-contained up to 300 volts and 50 amperes. Double current ranges are obtained by means of a range selector switch.

Range Extension: Potential ranges up to 750 volts obtained with external multipliers. Higher ranges require the use of potential transformers such as the Model 311. Current ranges may be extended beyond 50 amperes by using a 5 ampere instrument with the Model 461, Type 2, Current Transformer.

Model 432 Wattmeter

For Low Power Factor Use

Volts Maximum	Amperes Maximum	Watts		Scale Div.
		High Rg.	Low Rg.	
150/75	.5	15	7.5	75
	1	30	15	75
	2	60	30	60
	5	150	75	75
	10	300	150	75
250/125	.2	10	5	100
	.4	20	10	100
	1	50	25	100
	2	100	50	100
	4	200	100	100
	10	500	250	100
300/150	.2	12	6	60
	.5	30	15	75
	1	60	30	60
	2	120	60	60
	5	300	150	75
	10	600	300	60
150/75	1/.5	30/15	15/7.5	75
	2/1	60/30	30/15	60
	5/2.5	150/75	75/37.5	75
	10/5	300/150	150/75	75
250/125	.4/.2	20/10	10/5	100
	.8/.4	40/20	20/10	100
	2/1	100/50	50/25	100
	4/2	200/100	100/50	100
	8/4	400/200	200/100	100
300/150	.5/.25	30/15	15/7.5	75
	1/.5	60/30	30/15	60
	2/1	120/60	60/30	60
	5/2.5	300/150	150/75	75
	10/5	600/300	300/150	60

For General Use

Volts		Amperes		Watts		
Normal	Max.	Normal	Max.	High Rg.	Low Rg.	Scale Div.
100/50	130/65	.1	.15	10	5	100
		.2	.3	20	10	100
		.5	.75	50	25	100
		1	1.5	100	50	100
		2	3	200	100	100
		5	7.5	500	250	100
		10	15	1 KW	0.5 KW	100
		20	30	2 KW	1 KW	100
		50	75	5 KW	2.5 KW	100
150/75	200/100	.1	.15	15	7.5	75
		.2	.3	30	15	75
		.5	.75	75	37.5	75
		1	1.5	150	75	75
		2	3	300	150	75
		5	7.5	750	375	75
		10	15	1.5 KW	.75 KW	75
		20	30	3 KW	1.5 KW	75
		50	75	7.5 KW	3.75 KW	75
200/100	260/130	.1	.15	20	10	100
		.2	.3	40	20	80
		.5	.75	100	50	100
		1	1.5	200	100	100
		2	3	400	200	80
		5	7.5	1 KW	0.5 KW	100
		10	15	2 KW	1 KW	100
		20	30	4 KW	2 KW	80
		50	75	10 KW	5 KW	100
300/150	400/200	.1	.15	30	15	75
		.2	.3	60	30	60
		.5	.75	150	75	75
		1	1.5	300	150	75
		2	3	600	300	60
		5	7.5	1.5 KW	.75 KW	75
		10	15	3 KW	1.5 KW	75
		20	30	6 KW	3 KW	60
		50	75	15 KW	7.5 KW	75
150/75	200/100	1/.5	1.5/.75	150/75	75/37.5	75
		2/1	3/1.5	300/150	150/75	75
		5/2.5	7.5/3.75	800/400	400/200	80
		10/5	15/7.5	1500/750	750/375	75
200/100	260/130	1/.5	1.5/.75	200/100	100/50	100
		2/1	3/1.5	400/200	200/100	100
		5/2.5	7.5/3.75	1000/500	500/250	100
		10/5	15/7.5	2/1 KW	1/.5 KW	100
300/150	400/200	1/.5	1.5/.75	300/150	150/75	75
		2/1	3/1.5	600/300	300/150	60
		5/2.5	7.5/3.75	1500/750	750/375	75
		10/5	15/7.5	3/1.5 KW	1.5/.75 KW	75

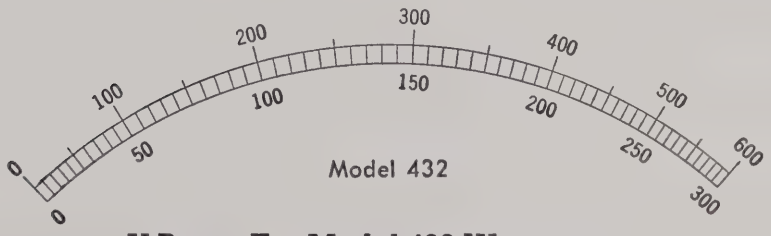

TYPICAL FULL SIZE SCALE

Y-Boxes For Model 432 Wattmeters

A Model 432 single phase a-c wattmeter can be used to measure the power in a balanced 3 phase, 3 wire system by means of an external Y-Box. The Y-Box is essentially a center tapped resistor through which the meter is connected to the 3 phase line. The load must be balanced in both phase angle and magnitude and the potential range of the wattmeter should not be lower than the voltage of line to neutral. For example, a 220 volt, 5 ampere, 3 phase, 3 wire system would use a 300 volt Y-Box with a 150 volt, 5 ampere, single phase wattmeter. The scale reading would be multiplied by 3. These Y-Boxes can be supplied as follows:

Normal Voltage of Instrument	Y-Box Multiplying Constant	Normal Line Voltage With Y-Box	Maximum Voltage With Y-Box	Type Box
75	3	150	170	51
150	3	300	340	52
150	4	400	450	52
150	5	500	550	53
150	6	600	650	53

All orders for Y-Boxes must give the instrument potential range with which the box will be used and the line voltage of the 3 phase system to be measured.

All orders for Y-Boxes to be used with meters already in possession of the purchaser must give the serial number of the instrument, since the box is for use with a specific instrument only.

ALTERNATING CURRENT PORTABLES
MODEL 455

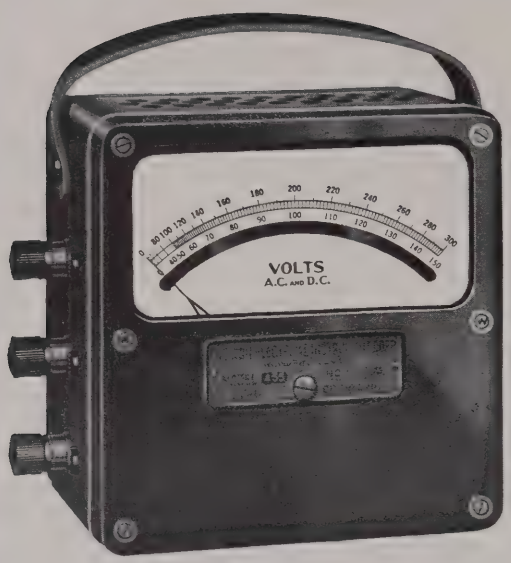

Model 455 Voltmeter

A-C AND D-C VOLTMETERS

Rated Accuracy 0.5%, horizontal position Scale 4.04" (103 mm)
Type: Electrodynamometer

Case Size { 3¼ x 5 x 5¼" / 83 x 127 x 133 mm } Approx. Weight { 2½ lbs. / 1.1 kgs. }

Power Consumption: 150 volt range at 115 volts 60 cycles—2.3 watts, 2.3 volt-amperes.

Standard Frequency Coverage: Direct current, and alternating current at frequencies from 25 to 125 cycles. Preferable to iron vane instruments where both types of power are involved.

High Frequency Coverage: Single and double range instruments can be provided for coverage of d-c, and a-c frequencies of 25 to 1000 cycles. Double range voltmeter ranges must have a ratio not greater than 2 to 1. Range coverage from 10 to 750 volts is practical. A minimum of about 3.5 watts is required to operate a single range instrument or the low range of a double range unit.

Coverage up to 2500 cycles is possible in single range instruments only, within the normal ½% accuracy by special compensation. Ranges from 20 to 750 volts are practical. Instrument operation requires about 8 watts minimum.

Ranges: Supplied in most ranges listed for Model 433 although their resistance may not correspond.

TYPICAL FULL SIZE SCALE

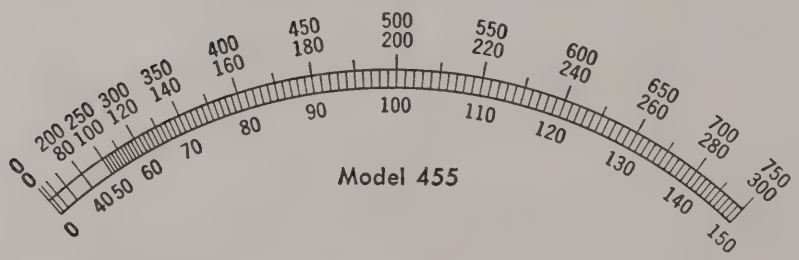

Carrying Cases For All Models

To insure longer service, instruments should be housed in leather cases when stored or when being transported on the job.

When ordering please specify the model numbers and case (standard or extended) of the instruments with which they are to be used.

Ordering Information

When placing an order for Weston Instruments always include the following, and supplement this information with as much additional pertinent data as possible.

1. **Model Number and Range.**
2. **For Direct or Alternating Current.**
3. **Sensitivity, if other than Listed.**
4. **Frequency, if other than Standard.**
5. **Position in use, if other than Horizontal.**
6. **Leather Carrying Case.**

WESTON INSTRUMENTS, DIVISION OF DAYSTROM, INCORPORATED, NEWARK 12, N. J., U. S. A.

PRINTED IN U.S.A.

WESTON

PRICE LIST 06-201

EFFECTIVE NOVEMBER 9, 1959

A-C and D-C Portable Instruments

All Prices Subject to Change Without Notice and are F. O. B. Factory, Newark 12, N. J.

SUPERSEDES SEPTEMBER 15, 1958

432 D-C AND SINGLE PHASE A-C WATTMETERS

FOR LOW POWER FACTOR USE — (25-125 CYCLES)

VOLTS MAX.	AMPERES MAX.	WATTS		SCALE DIV.	CATALOG NUMBER	PRICE
		High Range	Low Range			
150/75	.5	15	7.5	75	432-9901012	$190.50
	1	30	15	75	432-9901016	190.50
	2	60	30	60	432-9901017	190.50
	5	150	75	75	432-9901018	190.50
	10	300	150	75	432-9901019	190.50
250/125	.2	10	5	100	432-9901020	195.00
	.4	20	10	100	432-9901021	195.00
	1	50	25	100	432-9901022	195.00
	2	100	50	100	432-9901023	195.00
	4	200	100	100	432-9901024	195.00
	10	500	250	100	432-9901025	195.00
300/150	.2	12	6	60	432-9901026	195.00
	.5	30	15	75	432-9901027	195.00
	1	60	30	60	432-9901028	195.00
	2	120	60	60	432-9901029	195.00
	5	300	150	75	432-9901030	195.00
	10	600	300	60	432-9901031	195.00
150/75	1/.5	30/15	15/7.5	75	432-9902014	195.00
	2/1	60/30	30/15	60	432-9902015	195.00
	5/2.5	150/75	75/37.5	75	432-9902008	195.00 s
	10/5	300/150	150/75	75	432-9902016	195.00
250/125	.4/.2	20/10	10/5	100	432-9902017	207.50
	.8/.4	40/20	20/10	100	432-9902018	207.50
	2/1	100/50	50/25	100	432-9902019	207.50
	4/2	200/100	100/50	100	432-9902020	207.50
	8/4	400/200	200/100	100	432-9902021	207.50
300/150	.5/.25	30/15	15/7.5	75	432-9902022	212.50
	1/.5	60/30	30/15	60	432-9902023	212.50
	2/1	120/60	60/30	60	432-9902024	212.50
	5/2.5	300/150	150/75	75	432-9902009	212.50 s
	10/5	600/300	300/150	60	432-9902010	212.50 s

(For GENERAL USE on next page.)

S - Normally Carried in Stock. Do Not Include "S" in Your Order Write Up.

432 WATTMETERS — FOR GENERAL USE (25-125 CYCLES)

VOLTS		AMPERES		WATTS		Scale	CATALOG	
Normal	Maximum	Normal	Max.	High Range	Low Range	Divisions	NUMBER	PRICE
100/50	130/65	.1	.15	10	5	100	432-9901032	$183.00
		.2	.3	20	10	100	432-9901033	183.00
		.5	.75	50	25	100	432-9901034	183.00
		1	1.5	100	50	100	432-9901035	183.00
		2	3	200	100	100	432-9901036	183.00
		5	7.5	500	250	100	432-9901037	183.00
		10	15	1 KW	0.5 KW	100	432-9901038	183.00
		20	30	2 KW	1 KW	100	432-9901039	183.00
		50	75	5 KW	2.5 KW	100	432-9901040	183.00
150/75	200/100	.1	.15	15	7.5	75	432-9901041	183.00
		.2	.3	30	15	75	432-9901042	183.00
		.5	.75	75	37.5	75	432-9901043	183.00
		1	1.5	150	75	75	432-9901001	183.00 s
		2	3	300	150	75	432-9901003	183.00 s
		5	7.5	750	375	75	432-9901005	183.00 s
		10	15	1.5 KW	.75 KW	75	432-9901007	183.00 s
		20	30	3 KW	1.5 KW	75	432-9901009	183.00
		50	75	7.5 KW	3.75 KW	75	432-9901044	183.00
200/100	260/130	.1	.15	20	10	100	432-9901045	183.00
		.2	.3	40	20	80	432-9901046	183.00
		.5	.75	100	50	100	432-9901047	183.00
		1	1.5	200	100	100	432-9901048	183.00
		2	3	400	200	80	432-9901049	183.00
		5	7.5	1 KW	0.5 KW	100	432-9901050	183.00
		10	15	2 KW	1 KW	100	432-9901051	183.00
		20	30	4 KW	2 KW	80	432-9901052	183.00
		50	75	10 KW	5 KW	100	432-9901053	183.00
300/150	400/200	.1	.15	30	15	75	432-9901054	183.00
		.2	.3	60	30	60	432-9901055	183.00
		.5	.75	150	75	75	432-9901056	183.00
		1	1.5	300	150	75	432-9901002	183.00 s
		2	3	600	300	60	432-9901004	183.00 s
		5	7.5	1.5 KW	.75 KW	75	432-9901006	183.00 s
		10	15	3 KW	1.5 KW	75	432-9901008	183.00 s
		20	30	6 KW	3 KW	60	432-9901010	183.00 s
		50	75	15 KW	7.5 KW	75	432-9901011	183.00 s
150/75	200/100	1/.5	1.5/.75	150/75	75/37.5	75	432-9902001	183.00 s
		2/1	3/1.5	300/150	150/75	75	432-9902025	183.00
		5/2.5	7.5/3.75	800/400	400/200	80	432-9902002	183.00 s
		10/5	15/7.5	1500/750	750/375	75	432-9902005	183.00 s
200/100	260/130	1/.5	1.5/.75	200/100	100/50	100	432-9902026	183.00
		2/1	3/1.5	400/200	200/100	100	432-9902027	183.00
		5/2.5	7.5/3.75	1000/500	500/250	100	432-9902003	183.00 s
		10/5	15/7.5	2/1 KW	1/.5 KW	100	432-9902006	183.00 s
300/150	400/200	1/.5	1.5/.75	300/150	150/75	75	432-9902028	183.00
		2/1	3/1.5	600/300	300/150	60	432-9902029	183.00
		5/2.5	7.5/3.75	1500/750	750/375	75	432-9902004	183.00 s
		10/5	15/7.5	3/1.5 KW	1.5/.75 KW	75	432-9902007	183.00 s

S - Normally Carried in Stock. Do Not Include "S" in Your Order Write Up.

Y-BOXES FOR MODEL 432 WATTMETERS

Normal Voltage of Instrument	Y-Box Multiplying Constant	Normal Line Voltage With Y-Box	Maximum Voltage With Y-Box	Type Box	Price
75	3	150	170	51	$50.00
150	3	300	340	52	50.00
150	4	400	450	52	50.00
150	5	500	550	53	50.00
150	6	600	650	53	50.00

All orders for Y-Boxes must give the instrument potential range with which the box will be used and the line voltage of the 3 phase system to be measured.

All orders for Y-Boxes to be used with meters already in possession of the purchaser must give the serial number of the instrument, since the box is for use with a specific instrument only.

455 A-C AND D-C VOLTMETERS

Supplied in most ranges listed for Model 433 although their resistance may not correspond. Prices for equivalent ranges are $66.00 higher.

433 A-C VOLTMETER (25-125 CYCLES)

Range	Scale Div.	Approx. Resis. Ohms	Catalog Number	Price
† 10	100	80	433-1901002	$89.75
† 15	150	168	433-1901003	89.75 s
† 30	150	425	433-1901004	89.75 s
† 50	100	1140	433-1901010	89.75
† 75	150	2680	433-1901011	89.75
† 125	125	4400	433-1901012	89.75
† 150	150	5300	433-1901005	89.75 s
† 250	125	18,200	433-1901008	89.75 s
† 300	150	22,000	433-1901013	89.75
10/5	100	40/20	433-1902011	91.25
20/10	100	160/80	433-1903001	91.25 s
30/15	150	336/168	433-1903002	91.25 s
60/30	150	850/425	433-1903004	91.25 s
*150/15	150	5300/530	433-1903006	91.25 s
150/75	150	5300/2680	433-1903007	91.25 s
300/150	150	22,000/11,000	433-1903009	91.25 s
450/300/150	150	33,000/22,000/11,000	433-1905001	107.75 s
**600/300/150	150	44,000/22,000/11,000	433-1906002	107.75 s
**750/300/150	150	55,000/22,000/11,000	433-1906003	107.75 s

*The low range of this combination has an accuracy of 3%.

**Have extension on case to accommodate additional resistance necessary.

†Can be supplied with suppressed scale and free zero at a price of $158.75. Range of 90-135/180-270 volts, price $160.25.

433 A-C AMMETER (25-500 CYCLES)

Range	Scale Div.	Approx. Resis. Ohms	Catalog Number	Price
1	100	0.48	433-2901001	$84.75 s
1.5	150	0.20	433-2901008	84.75
2	100	0.12	433-2901009	84.75
3	150	0.053	433-2901010	84.75 s
5	100	0.020	433-2901002	84.75 s
10	100	0.007	433-2901004	84.75 s
15	150	0.0038	433-2901005	84.75 s
25	125	0.0016	433-2901011	84.75 s
30	150	0.00063	433-2901006	84.75 s
50	100	0.00038	433-2901007	84.75 s
2/1	100	0.12/0.48	433-2903004	97.75 s
5/2.5	100	0.02/0.08	433-2903001	97.75 s
10/5	100	0.0083/0.028	433-2903005	97.75 s
20/10	100	0.004/0.0108	433-2903006	97.75 s
3/1.5/0.75	150	0.18/0.43/0.59	433-2906002	135.75 s
5/2.5/1	100	0.13/0.26/0.37	433-2906001	135.75 s
10/5/1	100	0.030/0.070/0.37	433-2906005	135.75 s
10/5/2.5	100	0.030/0.060/0.075	433-2906006	137.75 s
15/7.5/1.5	150	0.023/0.044/0.19	433-2906007	135.75 s
20/5/2	100	0.040/0.19/0.30	433-2907001	135.75 s
30/7.5/3	150	0.0090/0.036/0.040	433-2908001	135.75 s
50/20/5	100	0.0084/0.0011/0.020	433-2909001	135.75 s
50/20/10	100	0.0073/0.0080/0.010	433-2909002	135.75 s

For Ammeters with Adjustable Pointer Stop add $8.25 to above prices.

433 A-C MILLIAMMETER (25-500 CYCLES)

Range	Scale Div.	Approx. Resis. Ohms	Catalog Number	Price
15	150	1850	433-4901001	$83.25 s
30	150	460	433-4901002	83.25 s
75	150	78	433-4901003	83.25
100	100	49	433-4901004	83.25
150	150	13	433-4901005	83.25 s
200	100	8.8	433-4901006	83.25
250	125	6.0	433-4901007	83.25 s
300	150	3.9	433-4901008	83.25
400	80	2.5	433-4901009	83.25
500	100	2.0	433-4901010	83.25
600	120	1.13	433-4901011	83.25
750	150	0.74	433-4901012	83.25
100/50	100	74/296	433-4903004	95.75 s
150/75	150	30/120	433-4903005	95.75 s
300/150	150	6.4/26	433-4903002	95.75 s
500/250	100	1.6/6.6	433-4903006	95.75 s

S - Normally Carried in Stock. Do Not Include "S" in Your Order Write Up.

931 D-C VOLTMETER

Range	Scale Div.	Ohms Per Volt	Catalog Number	Price
3	150	1000	931-1901004	$82.75 s
15	150	1000	931-1901005	82.75 s
30	150	1000	931-1901001	82.75 s
50	100	1000	931-1901003	82.75 s
150	150	1000	931-1901002	82.75 s
300	150	1000	931-1901006	82.75 s
30/7.5/3	150	1000	931-1905003	96.75 s
75/30/7.5	150	1000	931-1905002	96.75 s
150/15/3	150	1000	931-1905001	96.75 s
300/150/3	150	1000	931-1905005	96.75 s
500/100/10	100	1000	931-1905004	96.75 s
750/300/150	150	1000	931-1905006	96.75
3	150	5000	931-1902002	94.25
15	150	5000	931-1902003	94.25
30	150	5000	931-1902004	94.25
50	100	5000	931-1902001	94.25 s
150	150	5000	931-1902005	94.25
300	150	5000	931-1902006	94.25
30/7.5/3	150	5000	931-1906003	108.00 s
75/30/7.5	150	5000	931-1906002	108.00 s
150/15/3	150	5000	931-1906004	108.00 s
300/150/3	150	5000	931-1906006	108.00 s
500/100/10	100	5000	931-1906005	108.00 s
750/300/150	150	5000	931-1906001	108.00 s

931 D-C MILLIAMMETER

Range	Approx. Resis. Ohms	Scale Div.	Catalog Number	Price
1	93	100	931-4901002	$80.75
15	1.0	150	931-4901001	80.75
150	—	150	931-4902001	80.75
3/0.3/0.03	—	150	931-4904005	105.75
15/1.5/0.15	—	150	931-4904004	105.75 s
150/15/1.5	—	150	931-4904003	94.25 s
1500/150/15	—	150	931-4904002	94.25 s
3000/300/30	—	150	931-4904001	94.25 s

Single Range Milliammeter with ranges above 20 MA. are shunted and have a drop of 50 MV. ± 5%.

931 D-C MICROAMMETER

Range	Approx. Resis. Ohms	Scale Div.	Catalog Number	Price
30	2300	150	931-5901002	$105.75 s
100	2000	100	931-5901003	94.25 s
200	600	100	931-5901001	89.25 s
30	490	150	931-5902002	108.00 s
100	60	100	931-5902003	105.75 s
200	15	100	931-5902001	94.25 s

931 D-C AMMETER

Range	Scale Div.	Catalog Number	Price
*50 mv	100	.....	$84.25
*50 mv	150	.....	84.25
1	100	931-2901005	$84.25 s
1.5	150	931-2901004	84.25 s
3	150	931-2901002	84.25 s
5	100	931-2901001	84.25 s
7.5	150	931-2901006	84.25
15	150	931-2901003	84.25 s
30	150	931-2901007	84.25
50	100	931-2901008	84.25 s
5/0.5/0.05	100	931-2902007	96.75 s
5/2.5/0.5	100	931-2902008	96.75 s
10/1/0.1	100	931-2902006	96.75 s
10/5/1	100	931-2902009	96.75 s
15/3/0.15	150	931-2902010	96.75
15/3/1.5	150	931-2902003	96.75 s
25/2.5/0.5	100	931-2902011	96.75
25/10/2.5	100	931-2902012	96.75 s
30/15/3	150	931-2902005	96.75 s
50/5/0.5	100	931-2902013	96.75 s
50/10/2	100	931-2902002	96.75 s
50/20/5	100	931-2902001	96.75 s
50/25/10	100	931-2902004	96.75

*Price does not include external shunt.

Self contained up to 50 amperes inclusives. Instruments beyond 50 amperes must be utilized with 50 mv. external shunts.

932 A-C RECTIFIER TYPE MILLIVOLTMETER

Range	Catalog Number	Price
250/25	932-9901001	$168.00*

* Price includes 5' leads.

932 A-C RECTIFIER TYPE VOLTMETER

Range	Ohms Per Volt	Catalog Number	Price
300/150/75	1000	932-1903001	$133.00 s

9959 LEATHER CARRYING CASES

For Model	Part Number	Price
* 430	48532	$17.00
* 432	48532	17.00
* 433	48532	17.00
* 455	48532	17.00
* 931	48532	17.00
* 932	48532	17.00
** 430	55848	22.00
** 432	55848	22.00
** 433	55848	22.00
** 455	55848	22.00
** 931	55848	22.00
** 932	55848	22.00

* Standard Case. ** Extended Case.

S - Normally Carried in Stock. Do Not Include "S" in Your Order Write Up.

Daystrom, Incorporated, DAYSTROM-WESTON SALES DIVISION, Newark 12, N. J., U. S. A.

Printed in U.S.A.

11-59-1

CIRCULAR 06-202-A
OCTOBER 1958

WESTON

Model 622
HIGH SENSITIVITY PORTABLE INSTRUMENTS

WESTON INSTRUMENTS, Division of DAYSTROM, INCORPORATED
Newark 12, New Jersey, U. S. A.

WESTON HIGH SENSITIVITY PORTABLE INSTRUMENTS

Model 622 is a highly sensitive portable instrument which is especially adapted to a variety of laboratory requirements. It has great flexibility of use since it can be provided with a range changing switch and up to four binding posts.

It is a logical choice for consistently accurate measurement of current and potential in such fields as telephony, electronics, the design and manufacture of radios and tubes, experimental and development work, and temperature measurement. The long, hand-calibrated mirror scale is easily read through the large rectangular scale opening.

Model 622 instruments are of the double pivot type. They are calibrated for use in the horizontal position and do not need precise leveling.

Shielding is provided in Model 622 to minimize electrostatic effects and external magnetic field influence.

These instruments are capable of withstanding a dielectric test of 3000 volts between case and terminals applied in accordance with ASA specifications.

Almost any range combination up to 1000 volts and 2 amperes can be supplied in one instrument. Up to 10 current ranges or 11 voltage ranges are possible with the range changing switch. Under certain conditions two additional ranges can be provided on binding posts. However, it is not advisable to select extreme range combinations which may necessitate sacrifice of some qualities of good performance. A low resistance type instrument should be used when a small amount of energy is available, while the high resistance type is preferable when circuit conditions permit.

In the ultra-sensitive instruments, the extremely light weight moving coil is automatically short circuited by closing of the hinge type cover. This provides additional damping, guarding against possible damage during shipment and in handling.

WESTON HIGH SENSITIVITY PORTABLE INSTRUMENTS

Model 622 D-C Instruments

Accuracy ½ of 1%.....Scale Length 6.1" (155 mm) Dimensions { 8.75" x 7.75" x 4.06" / 222 x 197 x 103 mm } Approx. Weight { 8.5 lbs. / 4 kgs.

Permanent Magnet Moving Coil Type.....Molded Bakelite Case
Electrostatically and Magnetically Shielded

D-C VOLTMETERS

1000 Ohms Per Volt
Multi-Range with 4 Binding Posts

Ranges	Scale Div.
75/30/7.5	150
150/15/3	150
300/150/3	150
750/300/150	150

Multi-Range with Range Changing Switch and 2 Binding Posts

Ranges	Scale Div.
300/150/75/30/15/7.5/3/1.5	150
500/200/100/50/20/10/5/2	100
750/300/150/75/30/15/7.5/3/1.5	150
1000/500/200/100/50/20/10/5/2	100

Available at higher sensitivities. Correspondence invited.

D-C MILLIVOLTMETERS

Multi-Range with Range Changing Switch and 2 Binding Posts

Ranges	Resistance Ohms	Scale Div.
50/20/10/5/2	250/100/50/25/10	100
500/100/20/5/1	2500/500/100/25/5	100
500/100/50/20/5	2500/500/250/100/25	100
1000/200/50/10/1	5000/1000/250/50/5	100
2000/500/100/20/2	10,000/2500/500/100/10	100
1000/200/50/10/2	5000/1000/250/50/10	100

Each millivoltmeter includes 1 pair of 5 foot leads.

D-C MILLIAMMETERS

Multi-Range—Low Resistance Type
With Range Changing Switch and 2 Binding Posts

Ranges	Approx. Res. Ohms	Scale Div.
30/3/0.3/0.03	3.4/33.2/306/556	150
100/10/1/0.1	0.20/1.98/18.4/40.0	100
200/20/2/0.2	0.099/0.99/9.1/10	100
200/20/2/0.2	(10 ohms for all ranges)	100
500/50/5/0.5	0.10/1.0/9.8/80	100

D-C MICROAMMETERS

Model 622 microammeters, low resistance type, are designed to function on the lowest amount of energy consistent with reasonable performance. They should be used in circuits when but little energy may be abstracted by the instrument such as in the output of vacuum thermocouples.

High resistance microammeters should be used wherever circuit conditions will permit. They will stand more severe service and in general are more rapid in indication than low resistance instruments.

Single Range with 2 Binding Posts

Range	Scale Divs.	Low Resis. Type Approx. Resis. Ohms	High Resis. Type Approx. Resis. Ohms
* 5	100	4000	.....
* 10	100	3900	.....
* 15	150	2600	.....
20	100	280	2600
30	150	150	1800
50	100	90	1100
100	100	45	600
150	150	30	240
200	100	10	175

*These instruments have a scale length of 5.2"

Multi-Range with Range Changing Switch and 2 Binding Posts

Ranges	Resistance
**1000/500/200/100/50	96/184/400/600/400 ohm
1000/500/200/100/20	618/1214/2870/5160/3150 ohm

**Can be supplied with resistance of 100 ohms for all ranges. Recommended for telephone and PHOTRONIC® photo-electric cell circuits.

ELECTROLYSIS VOLT-MILLIVOLTMETERS

Model 622 D-C Instruments can be provided with a selection of ranges covering practically all electrolysis and corrosion investigations and cathodic protection testing. Request "Portable Electrolysis Instruments" circular for complete details.

Only the most commonly used ranges are listed—any practical range can be supplied.

WESTON HIGH SENSITIVITY PORTABLE INSTRUMENTS

Model 622 Thermo Instruments

Accurate within ½ of 1% on a-c of frequencies stated and within 1% on d-c at 25°C.; within 1% on a-c of frequency stated and 1.5% on d-c from 20° to 30°C.....Scale length 6.1" (155 mm).

Dimensions { 8.75 x 7.75 x 4.06" / 222 x 197 x 103 mm }....Approx. Weight { 8.5 lbs. / 4 kgs.

Thermocouple Type.....Molded Bakelite Case

Model 622 thermo instruments are basically ultra-sensitive temperature compensated d-c millivoltmeters calibrated with replaceable thermoelements.

Plug-in vacuum type elements, in which the heater and couple are contained in an evacuated glass bulb, are used in thermo milliammeters and thermo voltmeters. The overload capacity of these thermo-elements as used in Model 622 is exceptionally high, at least 2 times normal for all ranges.

External compensated type elements are used for the thermo ammeters. Temperature compensation is obtained through use of compensating strips which maintain the cold ends of the thermocouples at the temperature of the heater blocks. Overload rating is 1.5 times normal.

THERMO AMMETERS

External Thermoelement Type

Supplied with one Type C thermoelement of range desired and 5 foot shielded leads for connecting thermocouple to instrument. Multi-range combinations obtained by use of additional thermoelements of ranges desired. Instrument scales are directly calibrated to original thermoelements, or to average data where additional couples are supplied for multi-range combinations. Can be used on d-c and a-c ranges below 20 amperes; on a-c only for higher ranges. Frequency errors less than ½ of 1% up to 35 megacycles and less than 2% up to 65 megacycles.

Range	Scale Div.
5	100
10	100
25	125
50	100

THERMO MILLIAMMETERS

Plug-In Thermoelement Type

Instrument scale is directly calibrated to the original Type V thermoelement. Multi-range combinations available by use of additional thermoelements of desired ranges. Instrument scales are calibrated to average data for the multi-range combinations and correction charts are supplied to obtain the guaranteed accuracy of ½ of 1% on d-c and a-c of any frequency up to 2000 kilocycles.*

Range	Scale Div.	Approx. MV Drop
1.5	150	2250
2	100	1650
7.5	150	300
10	100	250
50	100	180
150	150	110
500	100	110

*A low loss adapter providing direct connection to the couple is recommended for plug-in couples for frequencies above 2000 kilocycles. Low loss adapter P/N D-80804.

Insulated heater Type V-1 thermoelements are also available.

THERMO MILLIAMMETERS

Plug-In, Shunted Type

With Range Changing Switch and 2 Binding Posts

Ring type shunt is incorporated in instrument, making possible several ranges with a single plug-in element. This type milliammeter is limited to d-c and audio frequencies, to 15 kilocycles, and is calibrated directly with the replaceable element supplied.

Range	Scale Div.	Approx. Res. Ohms
100/50/10/5	100	19.8/37/120/80
500/100/20/5	100	4/19.3/80/80
1000/200/50/10	100	.7/3.3/12.3/40
500/200/100/50	100	.9/2.1/4.2/8

Model 622 Thermo Instrument
(Type V Element Plugged In)

THERMO VOLTMETERS

Plug-In Thermoelement Type

Multi-Range with Range Changing Switch and 2 Binding Posts

Directly calibrated with single Type V thermoelement. Regularly supplied for d-c and a-c frequencies to 5000 cycles, on special order to 15,000 cycles.

Range	Scale Div.	Sensitivity In Ohms per Volt
20/5/2/0.5	100	50
50/10/5/1	100	100
100/20/10/2	100	100
100/50/10/5	100	500

Typical Full Size Scales and A-C Rectifier Type Instruments on Page 7.

Group II—Spare or Replacement Thermoelements

Replacement and spare thermoelements for Model 622 can be obtained without return of the instrument to the factory. The thermoelements are supplied with correction charts so that the guaranteed accuracy of ½ of 1% can be maintained with the original scale calibration. A correction chart is necessary as a maximum deviation of 3% in the thermoelement characteristics is possible between the original instrument scale calibration and the replacement thermoelement. Type V Contact Heater elements are normally furnished in the black Plug-in case; if the Model 622 Instrument was originally furnished with a Type V-I Insulated Heater element in a red Plug-in case, this should be stated to obtain the correct replacement element.

When orders are placed for additional elements for use as spares or replacements, the instrument serial number and the ranges desired for the elements must be given. Specify Group 2 thermoelements for Model 622.

Types of Thermoelements

Type V (Vacuum, Contact Heater)—This simplest type of vacuum thermoelement consists of a heater to which the thermocouple is directly attached. It is contained in a highly evacuated glass envelope to minimize heat loss. The heater impedance is low, resulting in a minimum voltage drop across the heater.

Contact type thermoelements Type V are in black cases; they are available in ranges of 1.5 to 500 milliamperes, and for use on d-c or a-c of any frequency.

Open circuit generated voltage at rated heater current is 5 millivolts d-c. Frequency and overload characteristics depend on range . . . some elements suitable for frequencies to 300 megacycles and for overloads beyond 100%. Refer to Table I for frequency characteristics and other data.

Type V-I (Vacuum, Insulated Heater)—Insulated heater vacuum thermoelements are very similar to the standard contact type described above except that the thermocouple is attached to the heater with an insulating bead. In order to obtain rapid response, the bead must be very small, must have good thermal conductivity and yet must act as an electrical insulator at high temperature. All Weston insulated heater vacuum thermoelements will withstand a test of 125 volts a-c between heater and thermocouple terminals. Electrostatic capacity between the heater and the thermocouple through the insulating bead is less than 2 micromicrofarads.

These insulated thermoelements are frequently found desirable in special types of research work to avoid grounding the heater circuit through the thermocouple. In general, however, the potential between the heater and the thermocouple should be kept at a minimum, preferably not over a few volts in order to avoid circulating currents at high frequency as well as stresses in the insulating bead due to any considerable potential difference.

Insulated type thermoelements Type V-I are in red cases.

They are available in ranges of 1.5 to 500 ma and, in general, have exactly the same ratings as the contact type with regard to output voltage, and as to frequency and overload characteristics. Refer to Table I for details.

Type C (Compensated)—Single heater, single thermocouple construction arranged for open air operation. Ranges up to 20 amperes a-c or d-c; 20 amperes and above a-c only. Sufficient temperature rise of the thermocouple thermo junction in contact with the heater is obtained at these ranges to generate approximately 12 millivolts d-c output at rated current through the heater.

The term "compensated" applies to the elimination of the cold end temperature variation effect. Thermocouple voltage generation is a function of two factors:

1—The materials used in the thermocouple (relation of each in thermoelectric series).

2—The temperature differential between the thermo junction and the cold ends.

Since the voltage generated is to be a function of the temperature rise of the heater at the thermo junction only, some means must be provided to maintain a constant relationship between the heater and the cold ends of the thermocouple. This constant temperature difference is achieved by terminating the cold ends of the thermocouple to two copper strips constructed thermally equivalent to the heater wire. The strips are placed in thermal contact, through thin mica electrical insulators, with the terminal blocks and thus with the heater ends. Variations in ambient temperature will thus affect the cold ends of the thermocouple and the heater to the same degree and the temperature differential will be a function of current through the heater only.

Generated voltage on all ranges is approximately 12 millivolts and overload capacity about 50%.

For frequency characteristics and other data see Table II.

Spare or Replacement Thermoelements

Approximate Characteristics

TABLE I

Type V (Contact Heater) Type V-I (Insulated Heater)

Range Rated ma (1)	Heater Ohms ± 10%	Approximate Heater Drop At Rated Current, mv	Couple Ohms ± 10% Types V	Couple Ohms ± 10% Types V-I	Maximum Safe Heater Current, ma	Freq. For 2% Error, Megacycles (3)
1.5	1365	2000	7.5	10	3.2	300
2	750	1500	7.5	10	5.0	300
2.5	475	1200	6	10	6.2	300
4	95	380	9	10	9.0	300
5	80	450	6	10	10.0	300
7.5	40 (2)	300	6	10	16	300
10	24 (2)	270	6	10	25	300
15	13	195	6	10	40	300
20	8.1	170	6	10	50	300
25	6.6	175	6	10	62	300
30	5.8	175	3	5	75	300
37.5	4.6	170	3	5	85	300
50	3.3	165	3	5	115	300
75	1.5	100	3	5	170	200
100	1.03	100	3	5	220	200
150	0.66	100	3	5	320	150
200	0.50	90	3	5	420	75
250	0.39	100	3	5	510	75
300	0.33	100	3	5	610	50
400	0.25	100	3	5	800	35
500	0.20	100	3	5	1000	35

Notes: (1) Rated heater current will produce 5 to 6 mv d-c at couple terminals.
(2) Subject to ± 15%.
(3) Error due to skin effect only.

TABLE II

Type C (Compensated)

Range Rated Amps (1), (2)	Heater Ohms (approx.)	Freq. For 2% Error, Megacycles (3)
0.5	0.83	150
0.75	0.43	75
1.0	0.26	75
1.25	0.21	75
1.5	0.13	75
2.0	0.12	50
2.5	0.096	50
3.0	0.081	40
3.5	0.057	65
4.0	0.050	65
5.0	0.040	65
7.5	0.027	65
10.0	0.020	65
12.0	0.017	65
15.0	0.013	65
20.0	0.010	65
25.0	0.008	65
50.0	0.004	65

Max. Safe Current — All Ranges 1.5 times rated.

Notes: (1) Rated heater current will produce 12 to 15 mv d-c at couple or meter terminals.
(2) All couples, 0.35 ohms approximate.
(3) Error due to skin effect only.

Types and Ranges

For Use With 100 Div. Scale Inst.		For Use With 150 Div. Scale Inst.	
V	2, 5, 10, 20, 50, 100, 200, 500 Ma	V	1.5, 7.5, 15, 30, 75, 150, 300 Ma
V-1	2, 5, 10, 20, 50	V-1	1.5, 7.5, 15, 30
C	1, 2, 2.5, 5, 10, 20 Amperes	C	.75, 1.5, 3, 15 Amperes
C	25, 50 Amperes	C	30 Amperes

Cases

Plug-in type cases are for vacuum thermoelements only, both contact and insulated types.

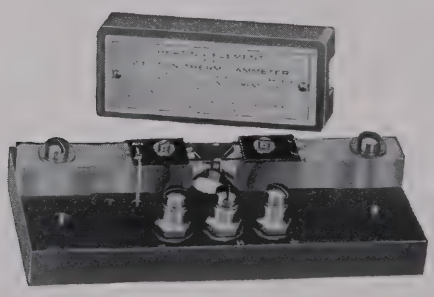

Rectangular cases, supplied for Type C thermoelements above 20 amperes, shown with the cover removed.

Round bakelite cases supplied for Type C thermoelements for ranges up to 20 amperes.

RECTIFIER TYPE A-C INSTRUMENTS

Model 622 can be adapted for measurement of alternating current by addition of an appropriate rectifier, and supplied as a voltmeter, milliammeter or microammeter. The rectifier type instrument inherently indicates average values, but can be calibrated, in terms of average or rms value of a sine wave. Most applications are special and should receive engineering consideration.

In the magnetic testing of iron samples as in the Epstein test, the maximum flux values are represented by the average values of the induced voltage. For such requirements Model 622 is available as a three range voltmeter with ranges of 75/150/300 volts, and an rms calibration. Well compensated for temperature, its accuracy is 0.5% of full scale value from 15 to 30° C. on a sine wave when using silicon diode type and 1.5% when using copper oxide type.

TYPICAL FULL SIZE SCALES

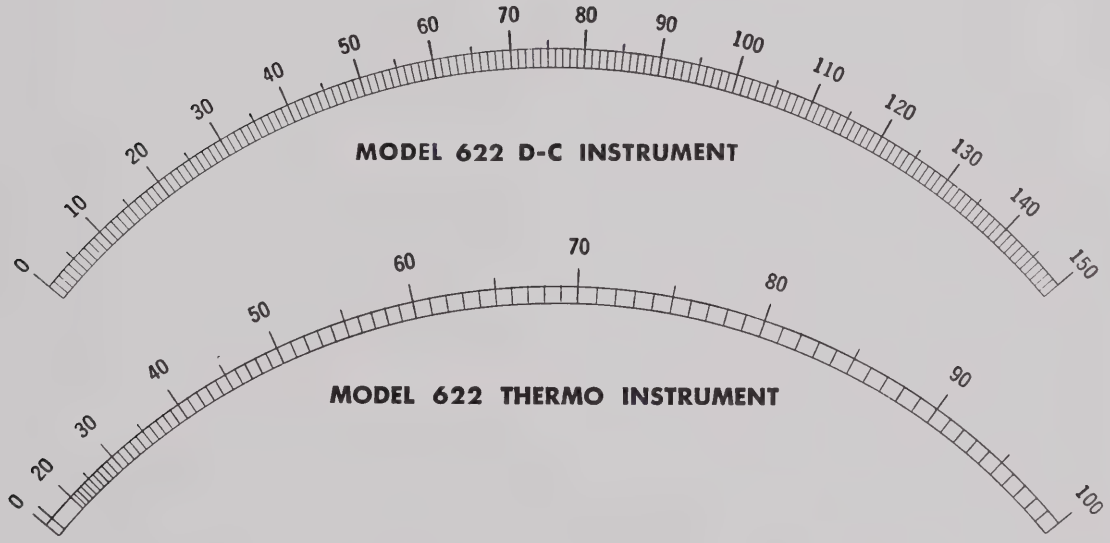

WARRANTY

Weston products are warranted to be of good workmanship and quality and free from defects in manufacture. Our liability is limited to repairing such defects, providing return is made prepaid to the Service Division, Weston Instruments, Division of Daystrom, Inc., Newark 12, N. J., within one (1) year after delivery to the original purchaser. We shall not be liable for consequential damages. This warranty is in lieu of all other warranties, guaranties, liabilities or obligations, statutory or implied, to the original purchaser or to any other person.

. . . WORLD WIDE SALES SERVICE . . .

The facilities listed below are staffed by instrument specialists, whose technical knowledge of Weston products aids them in rendering prompt and efficient service. They will welcome the opportunity to be of assistance to you. Through them, the Weston Engineering staff, which has had wide and diversified experience in the development, manufacture, and application of instruments, is at your disposal. Outside the United States these services will be carried on by Daystrom Subsidiary Companies and Daystrom International Distributors.

WESTON DISTRICT OFFICES

BOSTON—66 Central St., Wellesley 81, Mass.....CEdar 5-4300
BUFFALO 2—130 W. Chippewa St.....MOhawk 5243
CHICAGO 6—Room 1222, 205 W. Wacker Dr.....FRanklin 2-4656
CINCINNATI 37—7613 Reading Road.....VAlley 1-9105
CLEVELAND 28—3951 Lee Road.....SKyline 2-3030
DAYTON 2—11 W. Monument Avenue.....BAldwin 2-8164
DETROIT 21—16607 James Couzens Highway.....DIamond 1-2121
HARRISBURG—1511 North Front St.....CEdar 8-4276
KNOXVILLE 21, TENN.—2917 Sanderson Rd.....KNoxville 5-5632
LOS ANGELES 7—2001 South Grand Ave.....RIchmond 9-2361
MILWAUKEE 3—617 No. 2nd St., Room 904.....BRoadway 2-1538
NEWARK—Route 22 and Caldwell Ave., Union, N. J.....MUrdock 8-2020
NEW YORK 7—Room 1775, 50 Church St.....WOrth 4-3510
PHILADELPHIA 4—101 N. 33rd St.....BAring 2-6458—6443—6444
SAN DIEGO—4455 Miramar Rd., La Jolla, Calif.....GLencourt 4-0421
SAN FRANCISCO 3—147 10th St.....UNderhill 3-4250
WASHINGTON 4, D. C.—429 Pennsylvania Building
425 13th Street, N. W.....DIstrict 7-3636

WESTON REPRESENTATIVES

ALBANY 4—Carse Electric Corp.....1044 Broadway—ALbany 62-5364
AMARILLO—Butler and Land.....1505 W. Tenth St.—DRake 6-5255
ATLANTA 18—E. A. Thornwell, Inc.
1537 Howell Mill Road, N. W.—TRinity 5-7895
BALTIMORE—Thomas H. Closs
21 W. Pennsylvania Ave., Towson 4, Md.—VAlley 5-4445
CHARLOTTE 2, N. C.—Ranson, Wallace & Company
116½ E. 4th St.—EDison 4-4244
DALLAS 5—Butler and Land.....5538 Dyer St.—EMerson 1-6631
DENVER 16—Peterson Company, Inc.
4949 Colorado Blvd.—DExter 3-5434
HOUSTON 2—Lynn Elliott Company.....371 M & M Bldg.—CApital 4-9715
HOUSTON 4—Weston Industrial Specialist
4101 San Jacinto—JAckson 9-2165
JACKSON—Curtis H. Stout, Inc.....706 Electric Bldg.—JAckson 4-4326
JACKSONVILLE—Ward Engineering Co., Inc.
2727 Phyllis St.—EVergreen 8-7656
KANSAS CITY—C. B. Fall Co.
11410 Richmond Ave., Hickman Mills 34, Mo.—SOuth 1-6545
LITTLE ROCK, ARK.—Curtis H. Stout, Inc.
400 Shall St., P. O. Box 107—FRanklin 4-8201
MEMPHIS—Curtis H. Stout, Inc.....718 M & M Bldg.—JAckson 6-7601
MIDDLETOWN, CONN.—Dittman & Greer, Inc.
33 Pleasant St.—DIamond 6-9606
MINNEAPOLIS 3—Pinkney & Hine.....1925 Nicollet Ave.—FEderal 8-0523
NEW ORLEANS 12—W. J. Keller.....415 Natchez St.—MAgnolia 3603-4
ORLANDO—Ward Engineering Co., Inc.
1015 W. Central Ave.—GArden 2-4295, 3-9721
PHOENIX—J. E. Redmond Supply Co.
625 W. Madison St., P. O. Drawer 869—ALpine 4-8471
PITTSBURGH 22—Russell F. Clark Co.
1409 Clark Bldg.—ATlantic 1-8089, 1-8090
RICHMOND 26, VA.—Ranson, Wallace & Co.
P. O. Box 8762, West Hampton Station—ATlantic 8-8758
ROCHESTER 4, N. Y.—H. J. Rittenhouse Co.
311 Alexander St.—BAker 5-2340
SEATTLE 99—Eicher & Co.
5 West Harrison St., P. O. Box 9054—ATwater 4-1811
SHREVEPORT—Curtis H. Stout, Inc.
334 Ricou-Brewster Bldg.—SHreveport 5-5485
ST. LOUIS 1—C. B. Fall Co...317 N. 11th St., Suite 1001—CHestnut 1-2433
SYRACUSE 3—Naylor Electric Co., Inc.
1718 Erie Blvd. East—HArrison 2-3894, 2-2074
TULSA 1, OKLA.—Riddle and Hubbell Company
302 S. Cheyenne Ave., P. O. Box 727—LUther 5-5624

DAYSTROM SUBSIDIARY COMPANIES

ENGLAND—Daystrom Ltd, England
Glerum Hall, Southgate St., Gloucester
GERMANY—DAYSTROM Elektro Gmbh
Friedenstrasse 10 Frankfurt, Main
SWITZERLAND—Daystrom Overseas Ltd.....13 Rue Ceard, Geneva
CANADA—Daystrom Limited
TORONTO 10, ONT.....840 Caledonia Road
MONTREAL 9, PQ.....5430 Ferrier Street

DAYSTROM INTERNATIONAL DISTRIBUTORS

ARGENTINA—Compania Standard Electric Argentina, S.A.
Calle Uruguay 1037 Buenos Aires
BELGIUM—M.B.L.E.....80 Rue Des Deux Gares, Brussels, Belgium.
BELGIAN CONGO—M.B.L.E.—Congo, Stanleyville, Bukavu, Leopoldville, Elisabethville
BRAZIL—Standard Electrica, S. A.,
Avenida Rio Branco, 99 4° Andar, Rio de Janeiro
Standard Electrica, S. A.; Av. Ipiranga 1248, Sao Paulo
BURMA—Trading Co.....36, Barr St., Rangoon
CENTRAL AMERICA—Costa Rica, Nicaragua, Guatemala, El Salvador, and Honduras,
International Standard Electric Corporation,
50 Church Street, New York 7, New York
CHILE—Cia. Standard Electric, S.A.C.
Vicuna MacKenna 3939, Santiago
COLOMBIA—Ramon Cuellar & Cia., Ltda, Carrera 7a, #24-59/61, Bogota
CUBA—Antiga Co. S. A.....Obispo No. 153, Havana
Homer W. Parker.....Amenidad 72, Havana
DENMARK—Otto Ahrens, A/S.....Hørsholmsgade 20, Copenhagen N
DOMINICAN REPUBLIC—Dalmau Santos C. por A.
Palo Hincado No. 45, Ciudad Trujillo
EGYPT—The General Company For Pharmaceuticals, SAE,
Branch Amon, 147, Mohamed Bey Farid Street, Cairo
FRANCE—Ets. Radiophon.....50, Rue du Fg. Poissonniere, Paris 10e
FINLAND—Oy Stromberg Ab.....Helsinki
HAWAII—Honolulu Electrical Products Co., Ltd.
630 Piikoi Street, Honolulu
HOLLAND—Hulsewe Ingenieursbureau.....Rokin 65-67, Amsterdam-C.
ITALY—Ing. S. & Dr. Guido Belotti.....Piazza Trento 8, Milano (718)
JAPAN—Nippon Electric Co. Ltd.
2 Shiba Mita Shikoku-Machi, Minato-Ku, Tokyo
MEXICO—Dalma Comercial, S. A.,
Plaza Santos Degollado 10-104, Mexico 1, D. F.
NETHERLANDS ANTILLES—Interconti N.V.
% Lindeteves Central Amerika N.V. P.O. Box 272, Curacao
NEW ZEALAND—Standard Telephones and Cables (Pty.) Limited,
64 Dixon Street, Wellington
NORWAY—Maskin-Aktieselskapet Zeta.....Drammensveien 26, Oslo 22
PAKISTAN—Lindeteves (Pakistan) Ltd.
El Markaz Bldg., Bunder Rd., Karachi
PERU—Elecsa, S.A.....Jiron Cuzco No. 410, Apartado 42, Lima
PHILIPPINES—F. J. Olizon.....223-224 May Building, Manila
New York Office—Brannin and Kelly, 551 Fifth Avenue, New York 17, New York
PORTUGAL—Standard Electric, S.A.R.L.....Avenida Da India, Lisbon
PUERTO RICO—Mera Corporation.....Post Office Box 9157, Santurce
Badrena & Perez, Inc.....Carpenter Rd., Hato Rey
SOUTH AFRICA—Hubert Davies and Company Limited,
Hudaco House, 7, Rissik Street, Johannesburg
SPAIN—Standard Electrica, S.A.....Calle Ramirez de Prado, 7, Madrid
SURINAM—Lindeteves (Zuid Amerika), N.V.
Gravenstraat 40, Paramaribo
SWEDEN—Aktiebolaget Zander and Ingestrom
Fredsgatan 4, Stockholm 16
THAILAND—The International Engineering Company, Limited
Chartered Bank Lane, Bangkok
TURKEY—Helios, Posta Kutusu: 400.....Galata, Istanbul
VENEZUELA—Bauer & Rudolf C. A.,
Edificio Manhattan, Esquina De Cuji, Oficina No. 802, Caracas
Centro Tecnica
Edificio Pompei, Avenida Neuva Granada, Caracas

Inquiries from countries not listed above may be directed to

DAYSTROM INTERNATIONAL
100 Empire Street, Newark 12, N. J. BIgelow 8-2141

WESTON

PRICE LIST 06-202

EFFECTIVE NOVEMBER 9, 1959

High Sensitivity Portable Instruments -- Model 622

All Prices Subject to Change Without Notice and are F. O. B. Factory, Newark 12, N. J.

SUPERSEDES SEPTEMBER 15, 1958

622 D-C Voltmeter – Multi-Range
(With 4 Binding Parts)

Range	Ohms Per Volt	Scale Divisions	Catalog Number	Price
75/30/7.5	1000	150	622-1901003 s	$265.00
150/15/3	1000	150	622-1901001 s	265.00
300/150/3	1000	150	622-1901002 s	265.00
750/300/150	1000	150	622-1901004	265.00

622 D-C Voltmeter – Multi-Range
With Range Changing Switch and 2 Binding Parts

Range	Ohms Per Volt	Scale Div.	Catalog Number	Price
300/150/75/30/15/7.5/3/1.5	1000	150	622-1902001 s	$327.00
500/200/100/50/20/10/5.2	1000	100	622-1902002 s	327.00
750/300/150/75/30/15/7.5/3/1.5	1000	150	622-1902003 s	341.00
1000/500/200/100/50/20/10/5/2	1000	150	622-1902004 s	341.00

622 D-C Millivoltmeter – Multi-Range
With Range Changing Switch and 2 Binding Posts

Range	Resis. Ohms	Scale Div.	Catalog Number	Price
50/20/10/5/2	250/100/50/25/10	100	622-9902002 s	$321.00
500/100/20/5/1	2,500/500/100/25/5	100	622-9902003 s	321.00
500/100/50/20/5	2,500/500/250/100/25	100	622-9902005 s	321.00
1000/200/50/10/1	5,000/1000/250/50/5	100	622-9902007 s	321.00
2000/500/100/20/2	10,000/2500/500/100/10	100	622-9902008 s	321.00
1000/200/50/10/2	5,000/1000/250/50/10	100	622-9902009	321.00

622 D-C Milliammeter – Low Resis. Type
With Range Changing Switch and 2 Binding Posts

Range	Resis. Ohms	Scale Div.	Catalog Number	Price
30/3/0.3/0.03	3.4/33.2/306/556	150	622-4903001 s	$334.00
100/10/1/0.2	0.20/1.98/18.4/40.0	100	622-4903002 s	334.00
200/20/2/0.2	0.099/0.99/9.1/10	100	622-4903003 s	334.00
200/20/2/0.2	10 Ohms All Ranges	100	622-4903005	334.00
500/50/5/0.5	0.10/1.0/9.8/80	100	622-4903004 s	334.00

622 D-C Microammeter
With 2 Binding Posts (High Resis.)

Range	Approx. Resis. Ohms	Scale Divisions	Catalog Number	Price
20	2600	100	622-5902001	$269.00
30	1800	150	622-5902002	269.00
50	1100	100	622-5902003	257.00
100	600	100	622-5902004	257.00
150	240	150	622-5902005	257.00
200	175	100	622-5902006	257.00

622 D-C Microammeter
With 2 Binding Posts (Low Resis.)

Range	Approx. Resis. Ohms	Scale Divisions	Catalog Number	Price
5	4000	100	622-5901007	$304.00
10	3900	100	622-5901008	304.00
15	2600	150	622-5901009	304.00
20	280	100	622-5901003	281.00
30	150	150	622-5901004	281.00
50	90	100	622-5901001 s	269.00
100	45	100	622-5901002 s	269.00
150	30	150	622-5901005	269.00
200	10	100	622-5901006	269.00

622 D-C Microammeter – Multi-Range
With Range Changing Switch and 2 Binding Posts

Range	Resis. Ohms	Catalog Number	Price
1000/500/200/100/50*	96/184/400/600/400	622-5903002 s	$367.00
1000/500/200/100/20	618/1214/2870/5160/3150	622-5903003 s	382.00

*Can be supplied with resistance of 100 ohms all ranges. Price $393.75 s.

622 Thermo Ammeter
(External Thermoelement Type)

Range	Scale Divisions	Catalog Number	Price
5	100	622-2901001	$309.00
10	100	622-2901002	309.00
25	125	622-2901003	309.00
50	100	622-2901004	309.00

622 Thermo Voltmeter (Plug-In Thermoelement Type)

Range	Ohms Per Volt	Scale Divisions	Catalog Number	Price
20/5/2/0.5	50	100	622-1904001	$384.00
50/10/5/1	100	100	622-1904002	384.00
100/20/10/2	100	100	622-1904003	384.00
100/50/10/5	500	100	622-1904004	384.00

9997 – Spare or Replacement Thermoelements

RANGES For Use With 150 Div. Scale Inst.		
Type		Price
V	1.5,7.5,15,30,75,150,300,MA.	$89.75
V-1	1.5,7.5,15,30,MA.	95.50
C	.75,1.5,3,15 Amperes	42.00
C	30 Amperes	50.00

622 Thermo Milliammeter (Plug-In Thermoelement Type)

Range	Approx. MV Drop	Scale Divisions	Catalog Number	Price
1.5	2250	150	622-4901001	$339.00
2	1650	100	622-4901002	339.00
7.5	300	150	622-4901003	339.00
10	250	100	622-4901004	339.00
50	180	100	622-4901005	339.00
150	110	150	622-4901006	339.00
500	110	100	622-4901007	339.00

A low loss adapter providing direct connection to the couple is recommended for plug-in couples for frequencies above 2000 kilocycles. Price is $66.00.

9997 – Spare or Replacement Thermoelements

RANGES For Use With 100 Div. Scale Inst.		
Type		Price
V	2,5,10,20,50,100,200,500,MA.	$89.75
V-1	2,5,10,20,50,MA.	95.50
C	1,2,2.5,5,10,20 Amperes	42.00
C	25,50 Amperes	50.00

When orders are placed for additional elements for use as spares or replacements, the instrument serial number and the ranges desired for the elements must be given. Specify Group 2 thermoelements for Model 622. Type C (external compensated) elements are ordinarily provided in round bakelite cases for ranges of 20 amperes or less. Rectangular cases are standard above 20 amperes.

622 Thermo Milliammeter (Plug-In Shunted Type)
With Range Changing Switch and 2 Binding Posts

Range	Scale Div.	Approx. Res. Ohms	Catalog Number	Price
100/50/10/5	100	19.8/37/120/80	622-4904001	$404.00 s
500/100/20/5	100	4/19.3/80/80	622-4904002	404.00 s
1000/200/50/10	100	.7/3.3/12.3/40	622-4904003	404.00 s
500/200/100/50	100	.9/2.1/4.2/8	622-4904004	404.00

622 A-C Rectifier Type Voltmeter

Range	Catalog Number	Price
300/150/75	622-1902005	$302.00

Model 9959 Leather Carrying Case For 622

Part No.	Price
90675	$26.50

s – Normally carried in stock. Do not include "s" in your order write-up.

06-207-A

INDUSTRIAL ANALYZERS

Industrial Circuit Tester

A-C Industrial Analyzer

Volt-Ohm-Milliammeters

Volt-Ohmmeter

Ohmmeter

Insulation Tester

Accessories

INDICATE
WESTON
Instruments
SINCE 1888
RECORD — CONTROL

CATALOG
06-207

WESTON INSTRUMENTS, DIVISION OF DAYSTROM, INCORPORATED, NEWARK 12, N. J., U.S.A.

WESTON INDUSTRIAL ANALYZERS

INDUSTRIAL CIRCUIT TESTER

Size: 13" x 12½" x 5½" (330 x 318 x 140 mm)
Weight: with batteries, oak case, etc.; 13½ lbs. (6.13 kgs.)

Multi-Purpose — 28 Range Tester for:

- **Electronic Circuits and Equipment**
- **Communications Systems — Telephone — Radio, etc.**
- **Lighting and Power Circuits**
- **Signal Systems — Police, Fire and Burglar Alarms**
- **Resistance — in all types of circuits**
- **Transformers, Loads and Wiring**

The new improved Industrial Circuit Tester combines a broad coverage of industrial measurements in one instrument. Various accessories provide change-over from one type of special measurement to another. The Model 785 Type 6B has been redesigned to make use of Vamistor® type resistance units. Made by Weston, these highly accurate precision metal film resistors are hermetically sealed and highly stable, assuring accuracy for the life of the instrument. Temperature compensation is provided in the internal circuit, permitting more accurate measurement under the severe operating conditions often encountered during field tests.

A distinctive advantage of the Model 785 is that current and voltage ranges can be extended with accessories described on page 5.

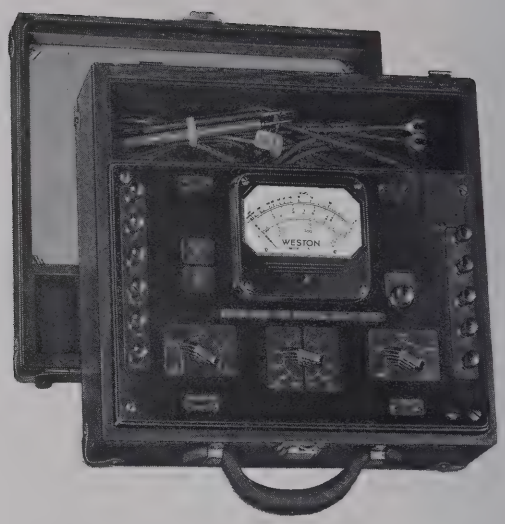

Model 785 Type 6B Industrial Circuit Tester

Combination Measurements: To check relay circuits for both voltage and current, it is possible to make both the current and voltage connections to the test set and by simple rotation of the functional switch, readings can be taken.

Indicating Instrument: A large 4½" instrument is used, adjusted to 50 microamps full scale. It can be easily replaced from stock should it become damaged. This also applies to the a-c rectifier deck mounted on the back of the instrument.

Application Measurements

Capacitor Leakage Measurements: The sensitive ohm ranges on Model 785 make these tests easy. Testing of paper capacitors should always be made using the top range.

Accessories for Special Measurement

High D-C Currents:
Model 9992 100 millivolt External Shunts are available up to 500 amps. (See page 5)

High A-C Currents:
Model 604 Type 1 Current Transformers (5 amps secondary) are available up to 500 amps on 25-125 cps. (See page 5)

RANGES

D-C Volts . . . 20,000 Ohms per volt (Full scale range given)
0.1 (Separate pin jacks)
1/10/50/200/500/1000 (by switch)
Accurate within ±2% up to 500 volts, ±3% at 1000 volts

D-C Current . . . (Full scale values)
50 microamps (Separate pin jacks)
1/10/100 milliamps
1/10 amps
Accurate within ±2%

Higher ranges and full scale indication by means of 100 millivolt external shunts.

A-C Volts . . . 1000 ohms per volt
5/15/30/150/300/750
Accurate within ±3%

A-C Current . . . (Self-contained transformer)
.5/1/5/10 amps
Accurate within ±3% on 60 cps, slightly less at 125 cps

Higher ranges through the use of external current transformers.

Resistance
3,000/30,000/300,000 ohms and 3/30 megohms full scale
25/250/2,500/25,000/250,000 ohms center scale (5 ranges)
Accurate within ±2% of linear arc length on any range

Supplied complete with:
Oak or steel case, 1.5 volt battery, 15 volt battery, (2) test probes, red and black, 48" long, (2) #12 cables 5' long, Instruction Book, Registration Card.

WESTON INDUSTRIAL ANALYZERS

A-C INDUSTRIAL ANALYZER

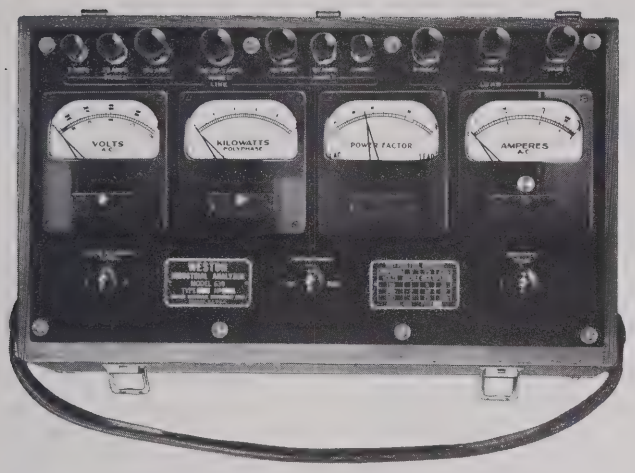

Model 639, A-C Industrial Analyzer

Type 2 . . . for use on 3 phase, 3 wire circuits
Type 3 . . . for use on 3 phase, 4 wire circuits

Size . . . 18⅞" x 10⅞" x 6⅞" (479 x 276 x 175 mm)
Approx. Wt.: . . . 32 lbs. (14.5 kgs.) Scale Length . . . 3.5" (89 mm)

The Weston Model 639 is a complete power analyzer which has won wide acceptance in industry among plant maintenance men . . . utility service engineers . . . electrical contractors . . . marine service men . . . and those engaged in general testing or installation work.

Model 639 is designed to analyze industrial loads by measuring a-c current, voltage and power, in single and polyphase circuits; as well as power factor in 3 phase balanced circuits. It is a compact unit arranged for maximum convenience and safety in operation, housed in a sturdy oak carrying case with removable cover.

The standard specified instrument accuracy for Type 2 on 25-125 cycle operation is shown in the tabulation on page 4, as well as the relative accuracies that can be expected on 200 and 400 cycle measurements. Special compensation is available for 200 or 400 cycle operation of any or all functions of the Model 639 Type 2 at any specified range. Correspondence is invited.

See next page for specifications of Model 639 Type 3 . . . for 3 phase, 4 wire circuits.

Features

Instruments: Four Model 610 instruments (4" x 4½"), a Voltmeter, Ammeter, Wattmeter, and Power Factor Meter are included in the sturdy oak carrying case. (Frequency Meter replaces Power Factor Meter on Type 3.) These instruments contain the large, rugged mechanisms used in the Weston 6" instruments, and are equipped with knife edge pointers for added accuracy.

The Ammeter is equipped with an adjustable pointer stop to facilitate the rapid determination of the maximum value of starting currents. The Wattmeter has a single scale with the multiplying factors conveniently located on the instrument scale.

Safe: Internal connections eliminate possibility of "outage" due to improper connections; or damage to individual meters.

Heavy insulated binding posts are located at top away from operator. Instruments are placed along a horizontal centerline with all switches below.

The danger of interference with other equipment is minimized, due to less external wiring.

Model 639 is insulated for 1000 volt service.

Convenient . . . Saves Time: Model 639 is self-contained and all interconnections are made within the unit, thereby saving considerable time when power studies are being made . . . Only a few simple connections are necessary to place this instrument in circuit, eliminating the maze of interconnecting wires necessary when individual meters and transformers are used . . . Internal switches facilitate rapid measurement of all line currents and voltages . . . Complication of applying multiplying factors to scale readings, when using individual meters and transformers is avoided . . . Fine line scales with knife-edge pointers, and "straight-line" grouping of identical instruments, provides easy readability.

Low Burdens: Potential circuit per phase, 7 volt-amperes. Current circuit per phase, 6 volt-amperes.

High Overload Capacity: Current Circuits are designed to be used continuously at 25% above their rated values and may be subject to greater overloads for shorter periods of time.

Built-In Accuracy: Current transformers are hand wound on nickel alloy ring type cores, making it possible to maintain the phase angle and ratio errors at a minimum which is well below transformers having joints and cores of ordinary material. The overall accuracy of the Wattmeter and Power Factor Meter is maintained even at low power factors as a result of the low phase angle of the transformers.

Series resistors are well spaced throughout Model 639 to provide maximum cooling for sustained operation and accuracy.

Ranges . . . Type 2

Voltage . . . . . 600/300/150 volts
Current . . . . . 125/25/5 amperes
Watts . . . . 100/50/25/20/10/5/4/2/1 Kilowatts
Power Factor . . . .30 Lag through unity to .80 Lead

Current and potential transformers may be used for extending these ranges.

On 220 volt 3-phase circuits, the 5 ampere range will take care of loads to 1 hp on the 2 kw scale . . . on the 25 ampere range, up to 7½ hp on the 10 kw scale . . . on the 125 ampere range up to 40 hp on the 50 kw scale. At 440 or 550 volts the hp and kw ranges are doubled.

WESTON INDUSTRIAL ANALYZERS

Accuracy Tabulation Of 60 Cycle Type 2 Instruments At Different Frequencies

INST.	RANGE	Accuracy % of Full Scale 25-125 cycles	200 cycles	400 cycles
AM.	All	±1	±1	+0.5 to −1.5
WATT.	All	±2	+1 to −3	0 to −4
P.F.	All	±.01 P.F.	±.02 P.F.	±.03 P.F.
Vm	600	±1	±1	0 to −2
Vm	300	±1	0 to −2	−2.5 to −4.5
Vm	150	±1	−2.5 to −4.5	−13.5 to −15.5

Model 639 Type 3 Industrial Analyzer

For Use On 3 Phase, 4 Wire Circuits

Similar in construction and performance to the Type 2 described on the preceding page, with the following differences in specifications and ranges. The Type 3 will indicate true power on 3 phase 4 wire systems even under unbalanced conditions.

Ranges . . . Type 3

Voltage . . . . . 500/250/125 volts
Current . . . 200/100/50/5 amperes nominal
Frequency . . . . . 50-60 or 400 cps only
Kilowatts/KiloVARS . . . 160/80/40/20/4/2

Accuracy . . . Type 3

Includes four Model 610 type instruments . . . Voltmeter, Ammeter, Wattmeter, and Frequency Meter; all with knife edge pointers.

Voltmeter . . . . . ±1% of full scale
WattVARmeter . . . . . ±2% of full scale
Frequency Meter . . . ±0.6 cycle on 50-60 cps; ±3 cycles on 400 cps
Ammeter . . . . . ±1% of full scale

MODEL 779 INDUSTRIAL ANALYZER

Accuracy: a-c within 3%; d-c within 2% to 250 volts; 3% on 1,000 volt range

Size: 6⅜" x 9⅛" x 4⅞" (162 x 232 x 124 mm) Approx. Wt.: 6 lbs. (2.72 kgs.)

A compact 26 range sensitive analyzer with five d-c voltage ranges at a sensitivity of either 1,000 or 20,000 ohms per volt; five a-c voltage ranges with sensitivity of 1,000 ohms per volt. A-C voltage ranges are temperature compensated; uses Weston Vamistor® type precision resistors throughout, assuring long term instrument accuracy. Extremely low inductance and distributed capacitance of these units also permits use of the Model 779 on audio frequencies up to 10,000 cps. "Output" jack provides convenient measurement of a-c voltages superimposed on d-c. Supplied in a rugged oak case with removable cover and handy carrying handle, complete with test leads and instruction book.

Also available as Type 5A, for Telephone, Carrier Current and Transmission Line Measurements with an impedance of 600 ohms when looking into the 1 volt range. The "Output" circuit uses a larger capacitor than the Type 1B.

Model 779 Type 1B

Ranges

Volts D-C	Volts A-C	Current D-C Only	Decibels*	Ohms
2.5	2.5	.1 Ma	−14 to + 2**	0-3000
10	10	1 Ma	− 2 to +14**	0-30,000
50	50	10 Ma	+12 to +28**	0-300,000
250	250	50 Ma	+26 to +42†	0-30 Meg
1000	1000	250 Ma	+38 to +54††	
		1 Amp		
		10 Amp		

*Zero power level is based on six milliwatts in a 500 ohm line. **Substantially flat to 10,000 cycles. †Substantially flat to 3,000 cycles. ††Substantially flat to 1,000 cycles.

WESTON INDUSTRIAL ANALYZERS

POCKET SIZE TESTERS

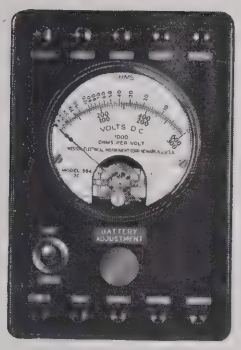

Model 564

Model 564 Volt-Ohmmeter

Accuracy: 2% **Scale: 2.36" (60 mm)**
Size: 5 3/64" x 3 45/64" x 2 9/16" (140 x 94 x 65 mm) Approx. Wt.: 1 3/4 lbs. (.79 kgs.)

For all general maintenance measurements on D-C equipment. Pocket size, convenient and easy to use. Probes and 4.5 volt battery are supplied.

Voltage: 3/30/300/600 volts d-c (1,000 ohms per volt)
Resistance: Full scale — 1,000/10,000/100,000/1,000,000 ohms

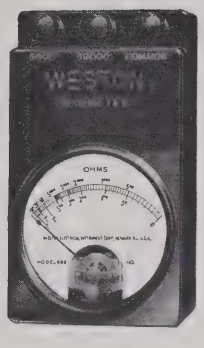

Model 689
Type 1-E

Model 689 Ohmmeters

Accuracy: 2% **Scale: 2.36" (60 mm)**
Size: 5" x 2 7/8" x 1 7/8" (125 x 73 x 47.6 mm) Approx. Wt.: 1 lb. (.45 kgs.)

Checks circuits by the resistance and continuity method. For production testing of armature and field resistance of small motors, relay and coil testing and other electrical components. Test leads and battery are supplied.

Ranges: Type 1-E—double range 0-5,000 and 50,000 ohms-full scale
Type 1-F—double range 0-10 and 0-1,000 ohms-full scale

Model 697

Model 697 Volt-Ohm-Milliammeter

Accuracy: 2% D-C — 5% A-C **Scale: 2.36" (60 mm)**
Size: 5 9/16" x 3 3/4" x 3 9/16" (141 x 95 x 65 mm) Approx. Wt.: 1 3/4 lbs. (.794 kgs.)

Low cost, light weight instrument with a well selected group of ranges to cover the majority of measurements required in electrical and electronic equipment. Ideal for portable use and small enough to be included in a kit of general maintenance tools. Test leads and 4.5 volt battery are supplied.

Voltage: 0-7.5/15/150/750 a-c and d-c (1000 ohms per volt)
Current: 0-7.5/75 milliamperes d-c
Resistance: Full scale at 5,000/500,000 ohms — Center scale 35/3500 ohms

Model 799

Model 799 Insulation Tester

Scale: 2.375" (60.3 mm)
Size: 3 3/16" x 5 1/4" x 5" (86 x 133 x 127 mm) Approx. Wt.: 3.8 lbs. (1.7 kgs.)

For leakage measurements up to 10,000 megohms at low voltage with a maximum test potential of 50 volts d-c. A shield connection and lead are provided to eliminate error due to leakage currents. Supplied complete with (3) test leads with insulated clips, tubes, batteries and oak carrying case. Instruction Book and carrying strap also included.
Type 2 is also available, for use in explosive atmospheres.

Range: 0-10,000 megohms (Logarithmic scale)

Accessories for Weston Analyzers

Model 604 Current Transformer . . . Toroidal, inserted primary type, used to increase a-c current ranges of the Model 785 Circuit Tester. Type 1, accuracy ± 1%, 25-125 cps, 5 amp secondary with typical ratios of 200:5, 300:5, 500:5. Higher ratios available on request.

Model 9992 100 Mv External Shunt . . . Used for extending d-c current ranges of Model 785 beyond 10 amperes. Available in 50, 100, 250 and 500 ampere capacities.

Carrying Cases . . . When ordering please specify model number of instruments with which they are to be used. Cases available for Models 564, 689 and 697.

WESTON SERVICE TEST EQUIPMENT

MARK II ANALYZER

Mark II Model 980

The new thin-line Mark II is a highly sensitive and extremely rugged volt-ohm-milliammeter designed for a wide range of accurate test measurements in the electronic field. It has a d-c sensitivity of 20,000 ohms/volt, and an a-c sensitivity of 1,000 ohms/volt. Accuracy is 2% d-c, 3% a-c; 100 MV drop on current ranges.

The famous Weston CORMAG® mechanism protects the instrument against false readings due to magnetic disturbances. Electrostatic shielding assures accurate measurements at high d-c voltages. Fuses in the low ohmmeter circuits prevent burnout if voltages are mistakenly applied. Interchangeable parts eliminate all need for parts selection in the event replacements are ever necessary. The break-proof case will withstand dropping and thus eliminate the major source of repair and maintenance costs.

FEATURES

- Modern Thin-Line Design
- Spring Back Jewels for Maximum Shock Resistance
- Fused Resistance Ranges
- Static Shielded for Accurate High Voltage Measurement
- Fully Insulated Crack-Proof Case
- Single Selector Knob for all Functions and Ranges
- Wide Angle Scale for Maximum Visibility
- Precision Components — No Parts Selection Required
- Single Board Etched Wiring Circuit for Easy Maintenance
- Transit Switch Position to Dampen Movement During Transportation
- 4-Way Combination Tilt Stand and Protective Cover Available

SPECIFICATIONS

ACCURACY: 2% d-c; 3% a-c

SIZE: 7 9/16" x 6 1/4" x 3"

CASE: Black drop-resistant plastic

PANEL: Black drop-resistant plastic with engraved white markings

SCALE LENGTH: 4.63"

APPROX. WEIGHT: 2 lbs., 8 ozs.

SCALE: Black markings on white background

RANGES

A-C Volts: 1.6, 8, 40, 160, 400, 1600 . . . at 1,000 ohms/volt

DB Ranges: —15 db to +54 db (in six ranges)

D-C Volts: 1.6, 8, 40, 160, 400, 800, 4000 . . . at 20,000 ohms/volt

D-C Microamperes: 80

D-C Milliamperes: 1.6, 8, 80, 800

Ohms: Four decade ranges; 1K to 10 meg full scale; 25 ohms to 250 K center scale.

HIGH VOLTAGE PROBES

High voltage probes are available for measuring high voltages up to 20 kv at 50 microamperes or less. Probes have multiplier resistors encased in insulated handle. Multipliers are rated with flash voltage of 30 kv.

LARGE EASY TO READ SCALE (Full Size)

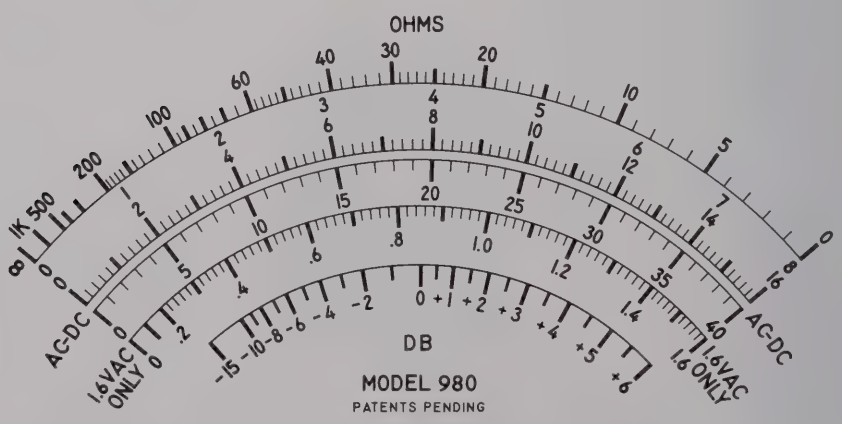

NEW 4-WAY COVER: This combination protective front cover and stand stores all the test leads and instruction book and can be used four ways, as a . . .

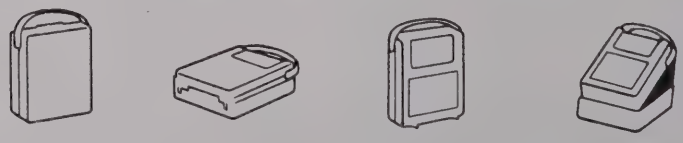

Protective Cover — Horizontal Stand — Vertical Stand — Tilt Stand

. . . WORLD WIDE SALES SERVICE . . .

The facilities listed below are staffed by instrument specialists, whose technical knowledge of Weston products aids them in rendering prompt and efficient service. They will welcome the opportunity to be of assistance to you. Through them, the Weston Engineering Staff, which has had wide and diversified experience in the development, manufacture, and application of instruments, is at your disposal. Outside the United States these services will be carried on by Daystrom Subsidiary Companies and Daystrom International Distributors.

WESTON DISTRICT OFFICES

ALBANY—5 Herbert Drive, Latham, N. Y.....STate 5-5161
BOSTON—66 Central St., Wellesley 81, Mass.....CEdar 5-4300
BUFFALO 26—4446 Main St.....CIrcle 3355
CHICAGO 6—Room 1222, 205 W. Wacker Dr.....FRanklin 2-4656
CINCINNATI 37—7613 Reading Road.....VAlley 1-9105
CLEVELAND 28—3951 Lee Road.....SKyline 2-3030
DAYTON 2—11 W. Monument Avenue.....BAldwin 2-8164
DETROIT 21—16607 James Couzens Highway.....DIamond 1-2121
HARRISBURG—1511 North Front St.....CEdar 8-4276
HOUSTON 27—3405 Mercer.....JAckson 6-4115
KNOXVILLE 21, TENN.—2917 Sanderson Rd.....KNoxville 5-5632
LOS ANGELES 7—2001 South Grand Ave.....RIchmond 9-2361
MILWAUKEE 3—617 No. 2nd St., Room 904.....BRoadway 2-1538
NEWARK—Route 22 and Caldwell Ave., Union, N. J.
MUrdock 8-2020
NEW YORK 7—Room 1775, 50 Church St.....WOrth 4-3510
PHILADELPHIA 4—101 N. 33rd St.....BAring 2-6458—6443—6444
ROCHESTER 4—207 Burke Building, 5 Saint Paul St...BAker 5-9546
SAN DIEGO—4455 Miramar Rd., La Jolla, Calif...GLencourt 4-0421
SAN FRANCISCO 3—147 10th St.....UNderhill 3-4250
SYRACUSE—4308 E. Genesee St., DeWitt 14, N. Y.....GIbson 6-4330
WASHINGTON 4, D. C.—429 Pennsylvania Building
425 13th Street, N. W.....DIstrict 7-3636

WESTON REPRESENTATIVES

AMARILLO—Butler and Land....1505 W. Tenth St.—DRake 6-5255
ATLANTA 18—E. A. Thornwell, Inc.
1537 Howell Mill Road, N. W.—TRinity 5-7895
BALTIMORE—Thomas H. Closs
21 W. Pennsylvania Ave., Towson 4, Md.—VAlley 5-4445
CHARLOTTE 2, N. C.—Ranson, Wallace & Company
116½ E. 4th St.—EDison 4-4244
DALLAS 5—Butler and Land.....5538 Dyer St.—EMerson 1-6631
DENVER 16—Peterson Company, Inc.
4949 Colorado Blvd.—DExter 3-5434
JACKSON—Curtis H. Stout, Inc.
706 Electric Bldg.—JAckson 4-4326
JACKSONVILLE—Ward Engineering Co., Inc.
2727 Phyllis St.—EVergreen 8-7656
KANSAS CITY—C. B. Fall Co.
11410 Richmond Ave., Hickman Mills 34, Mo.—SOuth 1-6545
LITTLE ROCK, ARK.—Curtis H. Stout, Inc.
400 Shall St., P. O. Box 107—FRanklin 4-8201
MEMPHIS—Curtis H. Stout, Inc.
718 M & M Bldg.—JAckson 6-7601
MIDDLETOWN, CONN.—Dittman & Greer, Inc.
33 Pleasant St.—DIamond 6-9606
MINNEAPOLIS 3—Pinkney & Hine
1925 Nicollet Ave.—FEderal 8-0523
NEW ORLEANS 12—W. J. Keller
415 Natchez St.—MAgnolia 3603-4
ORLANDO—Ward Engineering Co., Inc.
1015 W. Central Ave.—GArden 2-4295, 3-9721
PHOENIX—J. E. Redmond Supply Co.
625 W. Madison St., P. O. Drawer 869—ALpine 4-8471
PITTSBURGH 22—Russell F. Clark Co.
1409 Clark Bldg.—ATlantic 1-8089, 1-8090
RICHMOND 26, VA.—Ranson, Wallace & Co.
P. O. Box 8762, West Hampton Station—ATlantic 8-8758
SEATTLE 99—Eicher & Co.
5 West Harrison St., P. O. Box 9054—ATwater 4-1811
SHREVEPORT—Curtis H. Stout, Inc.
334 Ricou-Brewster Bldg.—SHreveport 5-5485
ST. LOUIS 1—C. B. Fall Co.
317 N. 11th St., Suite 1001—CHestnut 1-2433
TULSA 1, OKLA.—Riddle and Hubbell Company
302 S. Cheyenne Ave., P. O. Box 727—LUther 5-5624

DAYSTROM SUBSIDIARY COMPANIES

CANADA—Daystrom Limited
TORONTO 19, ONT.....840 Caledonia Road
MONTREAL 9, P.Q.....5430 Ferrier Street
ENGLAND—Daystrom Ltd., Glevum Hall, Southgate St., Gloucester
GERMANY—Daystrom Elektro Gmbh.
Friedenstrasse 10 Frankfurt, Main
SWITZERLAND—Daystrom Overseas Ltd.....13 Rue Ceard, Geneva

DAYSTROM INTERNATIONAL DISTRIBUTORS

ARGENTINA—Compania Standard Electric Argentina, S.A.
Calle Uruguay 1037 Buenos Aires
BELGIUM—M.B.L.E.....80 Rue Des Deux Gares, Brussels, Belgium
BELGIAN CONGO—M.B.L.E.—Congo, Stanleyville, Bakavu,
Leopoldville, Elisabethville
BRAZIL—Standard Electrica, S. A.,
Avenida Rio Branco, 99 4° Andar, Rio de Janeiro
Standard Electrica, S. A.; Av. Ipiranga 1248, Sao Paulo
BURMA—Trading Co.....36, Barr St., Rangoon
CENTRAL AMERICA—Costa Rica, Nicaragua, Guatemala,
El Salvador, and Honduras,
International Standard Electric Corporation,
50 Church Street, New York 7, New York
CHILE—Cia. Standard Electric, S.A.C.
Vicuna MacKenna 3939, Santiago
COLOMBIA—C. E. Halaby & Co., Ltd.....Bogota & Medellin
CUBA—Antiga Co. S. A.....Obispo No. 153, Havana
Homer W. Parker.....Amenidad 72, Havana
DENMARK—Semler & Matthiassen..Teglvaerksgade 22, Copenhagen
DOMINICAN REPUBLIC—Dalmau Santos C. por A.
Palo Hincado No. 45, Ciudad Trujillo
EGYPT—The General Company For Pharmaceuticals, SAE,
Branch Amon, 147, Mohamed Bey Farid Street, Cairo
FINLAND—Oy Stromberg Ab.....Helsinki
FRANCE—Ets. Radiophon.....50, Rue du Fg. Poissonniere, Paris 10e
HOLLAND—Hulsewe Ingenieursbureau
Rokin 65-67, Amsterdam-C.
ITALY—Ing. S. & Dr. Guido Belotti
Piazza Trento 8, Milan (718)
S. I. M. E. R. a.r.l.....8 Piazza Duca d'Aosta, Milan
JAPAN—Nippon Electric Co. Ltd.
2 Shiba Mita Shikoku-Machi, Minato-Ku, Tokyo
MEXICO—Dalma Comercial, S. A.,
Plaza Santos Degollado 10-104, Mexico 1, D. F.
Servo Mex, S.A.....Oaxaca 28-601 Mexico 7, D. F.
NETHERLANDS ANTILLES—Interconti N.V.
% Lindeteves Central Amerika N.V. P.O. Box 272, Curacao
NEW ZEALAND—Standard Telephones and Cables (Pty.) Limited,
64 Dixon Street, Wellington
NORWAY—Maskin-Aktieselskapet Zeta
Drammensveien 26, Oslo 22
PAKISTAN—Lindeteves (Pakistan) Ltd.
El Markaz Bldg., Bunder Rd., Karachi
PERU—Elecsa, S.A.....Jiron Cuzco No. 410, Apartado 42, Lima
PHILIPPINES—F. J. Olizon.....223-224 May Building, Manila
New York Office—Brannin and Kelly, 551 Fifth Avenue,
New York 17, New York
PORTUGAL—Standard Electric, S.A.R.L...Avenida Da India, Lisbon
PUERTO RICO—Mera Corporation..Post Office Box 9157, Santurce
Badrena & Perez, Inc.....Carpenter Rd., Hato Ray
SOUTH AFRICA—Hubert Davies and Company Limited,
Hudaco House, 7, Rissik Street, Johannesburg
SPAIN—Standard Electrica, S.A...Calle Ramirez de Prado, 7 Madrid
SURINAM—Lindeteves (Zuid Amerika), N.V.
Gravenstraat 40, Paramaribo
SWEDEN—Aktiebolaget Zander and Ingestrom
Fredsgatan 4, Stockholm 16
THAILAND—The International Engineering Company, Limited
Chartered Bank Lane, Bangkok
TURKEY—Helios, Posta Kutusu: 400.....Galata, Istanbul
VENEZUELA—Bauer & Rudolf C. A., Edificio Manhattan, Esquina
De Cuji, Oficina No. 802, Caracas
Centro Tecnica: Edificio Pompei, Avenida Nueva
Granada, Caracas

Inquiries from countries not listed above may be directed to

DAYSTROM INTERNATIONAL, 100 Empire Street, Newark 12, N. J.—BIgelow 8-2141

WESTON

Printed in U.S.A. 3-59

WESTON

PRICE LIST 06-207

EFFECTIVE NOVEMBER 9, 1959

Industrial Analyzers

All Prices Subject to Change Without Notice and are F. O. B. Factory, Newark 12, N. J.

SUPERSEDES MARCH 15, 1959

Model 564 Type 3C (Inc. Test Leads)	$ 82.00	s
Model 639 Type 2	819.50	s
Model 639 Type 3	1,628.00	
Model 689 Type 1E (Inc. Test Leads)	36.50	s
Model 689 Type 1F (Inc. Test Leads)	36.50	s
Model 697 (Inc. Test Leads)	76.75	s
Model 779 Type 1B	185.00	s
Model 779 Type 5A	192.00	s
Model 785 Type 6B in Oak Carrying Case	195.00	s
Model 785 Type 6B in Steel Case for Bench Use	169.00	s
Model 799 (Inc. leads, tubes, batteries, oak case)	95.25	s
Model 799 Type 2 (for use in explosive atmospheres)	121.00	

Carrying Cases - Model 9959

For Model 689, P/N 122607	11.00
For Model 564, 695 and 697, P/N 66147	9.00
For Model 785, Type 6B, Oak Case, P/N 118849	30.00

s – Normally carried in stock. Do not include "s" in your order write-up.

Daystrom, Incorporated, DAYSTROM-WESTON SALES DIVISION, Newark 12, N. J., U. S. A.

PRINTED IN U.S.A.

06-208-A
MARCH 1959

Zero Load

ELECTRONIC MILLI-VOLT/AMMETER

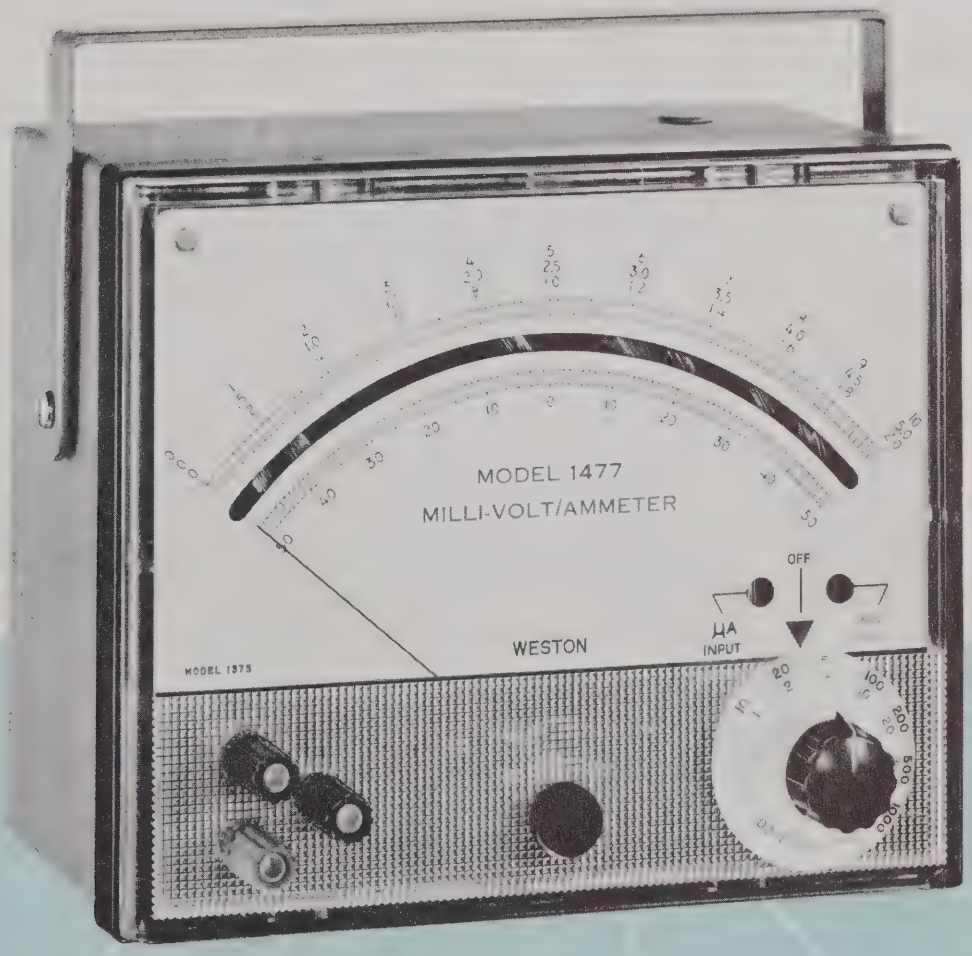

MODEL 1477

This versatile Electronic Milli-Volt/Ammeter provides in a single, compact, light weight unit, measurement and amplification of a wide span of d-c current and voltage ranges. The Weston Model 1477 uses a unique electronic servo-amplifier whose extreme high gain, coupled with full feedback, provides accuracy and stability without the adverse affects resulting from variations of line voltage or frequency, condition of amplifier tubes or other variables.

No mechanical switches or choppers are used. The device is a true d-c meter with zero-drift comparable to a typical permanent magnet moving coil instrument. It offers the advantage of essentially zero power-drain from the source being measured, and combines this with power-gain sufficient to supply 1 ma output to drive its own indicating meter, and any external load of 5000 ohms or less. The power output is available at terminals in the back of the unit.

The indicating instrument, incorporating the famous Weston self-shielded CORMAG® mechanism which permits its use in close proximity to magnetic fields without affecting accuracy, knife-edge pointer and mirror scale, all combine to provide dependable performance and unmatched visibility.

ADVANTAGES OF
THE WESTON ELECTRONIC MILLI-VOLT/AMMETER

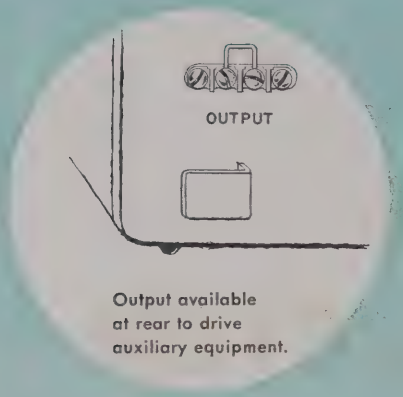

Output available at rear to drive auxiliary equipment.

- Calibration is dependent only on precision resistors in the range standard.
- No tube selection is necessary when replacements are needed.
- Almost no power is drawn from source being measured.
- Neither input or output need be grounded, but if grounding is desired, either side or some intermediate point can be grounded. Output polarity may be selected at will.
- Since zero-drift is dependent only on position of galvanometer coil, long-time drift can be maintained to less than 2 microvolts after a few minutes warm-up time.
- Gain stability and output linearity are both within 0.1% at ranges above 1 mv or 200 μa.
- Resolution capability is within 2 microvolts or .02 microamperes.
- Adjustable to zero-left or zero-center.

SPECIFICATIONS — MODEL 1477

RANGES:	10/20/50/100/200/500/1000 microamperes. 1/2/5/10/20/50/100/200/500/1000 millivolts.
ACCURACY:	2% on lowest current and lowest potential range. 1% on all others.
INSTRUMENT SCALE:	mirror, 7.2" long; black and red printing on white dial.
APPROX. SIZE:	7¾" wide x 6½" high x 4⅜" deep.
APPROX. WEIGHT:	5½ lbs.
POWER:	105-125 volts a-c 50-1600 cycles, 35 watts internally fused.
AMPLIFIER COMPONENT:	Weston Model 1411 INDUCTRONIC® DC Amplifier.

Price Only

~~$425.00~~

$355.00

Actual Size

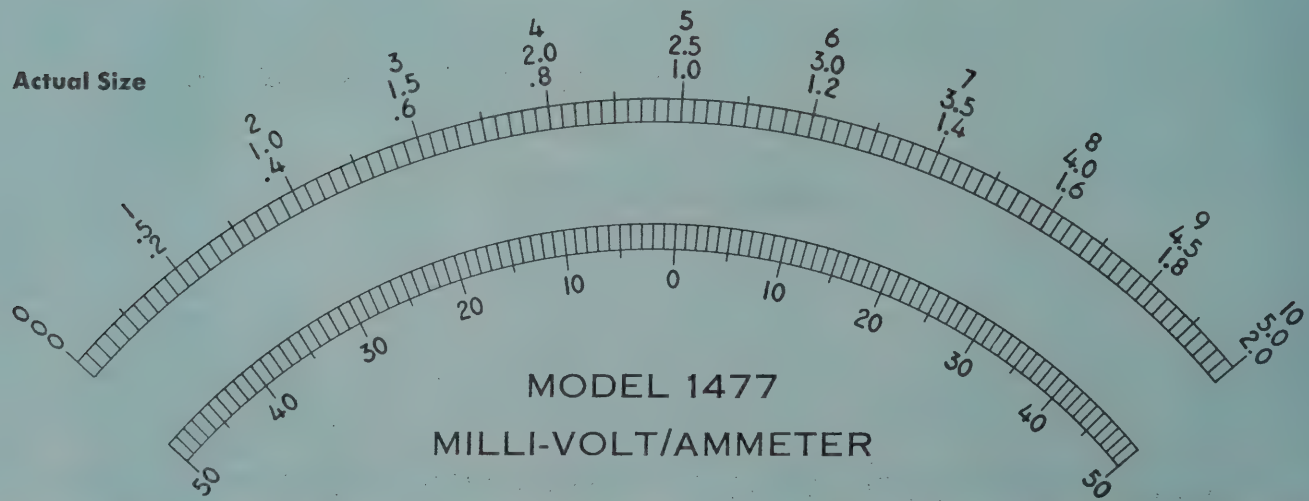

WESTON INSTRUMENTS, DIVISION OF DAYSTROM, INCORPORATED, NEWARK 12, N.J., U.S.A.

PRINTED IN U.S.A.

WESTON

06-208-A
MARCH 1959

ENGINEERING DATA
JAN - 7 1960 PM

Zero Load

ELECTRONIC MILLI-VOLT/AMMETER

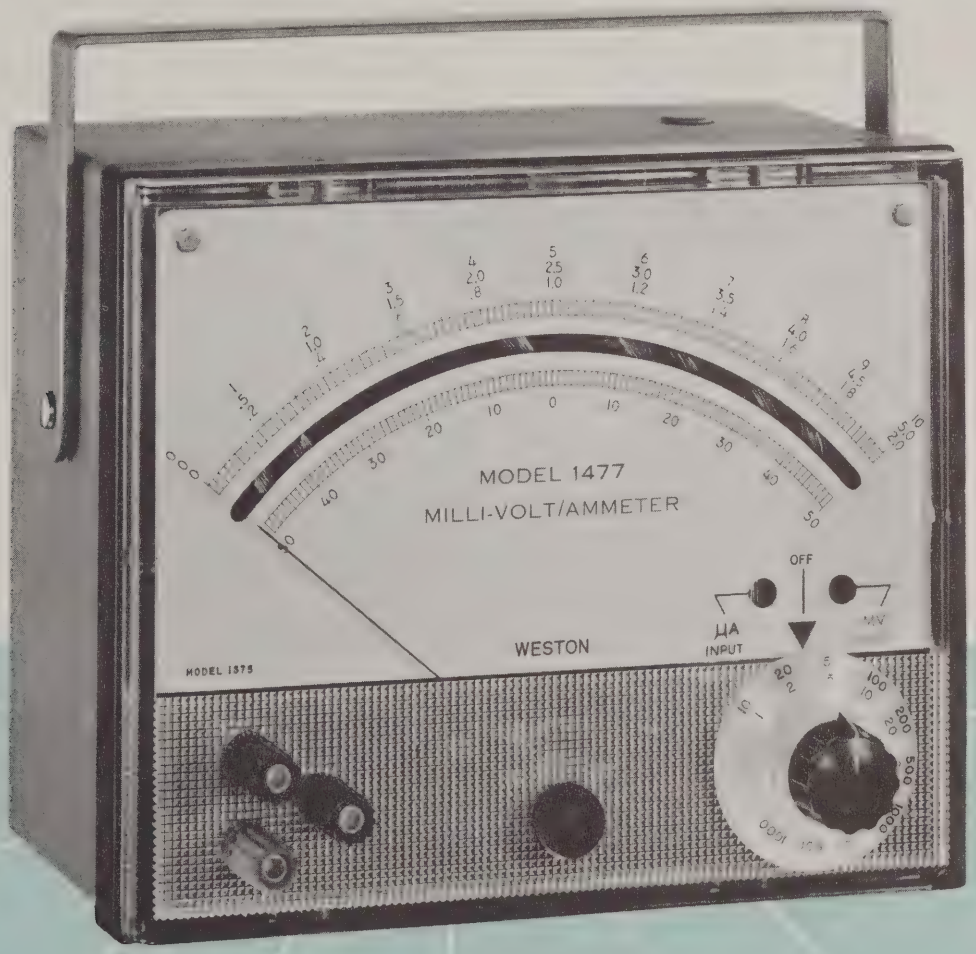

MODEL 1477

This versatile Electronic Milli-Volt/Ammeter provides in a single, compact, light weight unit, measurement and amplification of a wide span of d-c current and voltage ranges. The Weston Model 1477 uses a unique electronic servo-amplifier whose extreme high gain, coupled with full feedback, provides accuracy and stability without the adverse affects resulting from variations of line voltage or frequency, condition of amplifier tubes or other variables.

No mechanical switches or choppers are used. The device is a true d-c meter with zero-drift comparable to a typical permanent magnet moving coil instrument. It offers the advantage of essentially zero power-drain from the source being measured, and combines this with power-gain sufficient to supply 1 ma output to drive its own indicating meter, and any external load of 5000 ohms or less. The power output is available at terminals in the back of the unit.

The indicating instrument, incorporating the famous Weston self-shielded CORMAG® mechanism which permits its use in close proximity to magnetic fields without affecting accuracy, knife-edge pointer and mirror scale, all combine to provide dependable performance and unmatched visibility.

ADVANTAGES OF
THE WESTON ELECTRONIC MILLI-VOLT/AMMETER

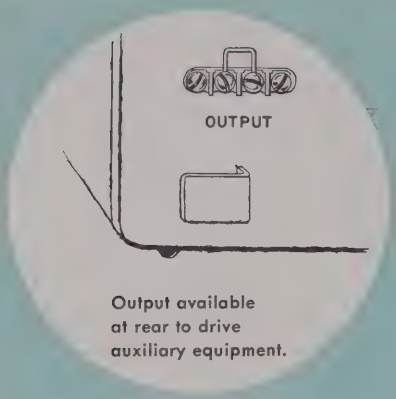

Output available at rear to drive auxiliary equipment.

- Calibration is dependent only on precision resistors in the range standard.
- No tube selection is necessary when replacements are needed.
- Almost no power is drawn from source being measured.
- Neither input or output need be grounded, but if grounding is desired, either side or some intermediate point can be grounded. Output polarity may be selected at will.
- Since zero-drift is dependent only on position of galvanometer coil, long-time drift can be maintained to less than 2 microvolts after a few minutes warm-up time.
- Gain stability and output linearity are both within 0.1% at ranges above 1 mv or 200 μa.
- Resolution capability is within 2 microvolts or .02 microamperes.
- **Adjustable to zero-left or zero-center.**

SPECIFICATIONS — MODEL 1477

RANGES:	10/20/50/100/200/500/1000 microamperes. 1/2/5/10/20/50/100/200/500/1000 millivolts.
ACCURACY:	2% on lowest current and lowest potential range. 1% on all others.
INSTRUMENT SCALE:	mirror, 7.2" long; black and red printing on white dial.
APPROX. SIZE:	7¾" wide x 6½" high x 4⅜" deep.
APPROX. WEIGHT:	5½ lbs.
POWER:	105-125 volts a-c 50-1600 cycles, 35 watts internally fused.
AMPLIFIER COMPONENT:	Weston Model 1411 INDUCTRONIC® DC Amplifier.

Price Only

$355.00

Actual Size

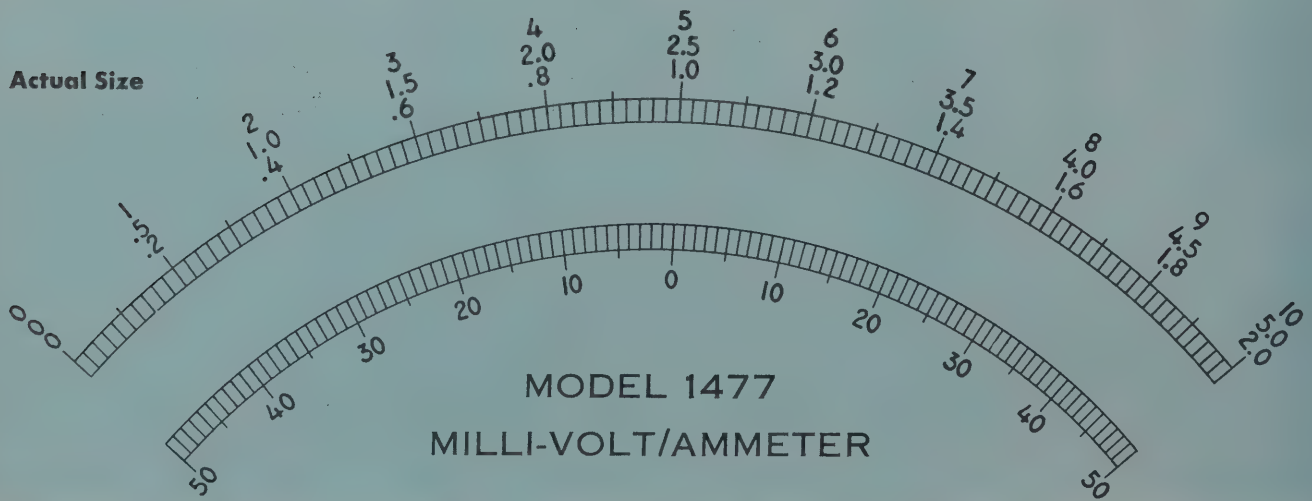

WESTON INSTRUMENTS, DIVISION OF DAYSTROM, INCORPORATED, NEWARK 12, N.J., U.S.A.

PRINTED IN U.S.A.

WESTON

PRICE LIST 06-400

EFFECTIVE NOVEMBER 9, 1959

Light Measuring Instruments

All Prices Subject to Change Without Notice and are F. O. B. Factory, Newark 12, N. J.

SUPERSEDES 8/57

Model 614 Foot-Candle Meter

Model 614 0-100/250/500 foot-candles (with VISCOR® and cosine correction filters)	$124.00 s
Model 614 0-60/120/600 foot-candles (with VISCOR® filter)	121.00 s

Model 703 Sightmeters

Model 703 Type 3A Sightmeter, 0-75 foot-candles (Unfiltered)	$ 43.00 s
Model 703 Type 6A Sightmeter, 0-75 foot-candles (with VISCOR® filter)	55.00 s
Model 703 Type 7 Sightmeter, 0-100 foot-candles (with VISCOR® and cosine correction filters)	58.25 s
Model 703 Type 8 Sightmeter 0-30 Foot Candles (with VISCOR® filter)	56.25 s
Model 9924 Multiplier Disc (x10), not usable with cosine corrected instruments	1.50
Model 9959 Leather Carrying Case	3.00

Model 756 Illumination Meter

0-20/100/500 foot-candles (with VISCOR® and cosine correction filters) including leather carrying case	$384.00 s
0-20/50/500 foot-candles (with VISCOR® filter) including leather carrying case	375.50 s
0-6/12/60/120/600 foot-candles (with VISCOR® filter) including leather carrying case	428.00 s

Model 756 Television Studio Illumination Meter

0-300/1500 foot-candles (with special filter) including leather carrying case	$339.00
Model 9950 Light Target with VISCOR® filter for use with the Model 756 Television Studio Illumination Meter	46.25
Model 9924 Calibration Curve for Model 9950 when used with Model 756 Television Studio Illumination Meter	30.25

Model 756 Sunlight Illumination Meter

Model 756 0-120/1,200/12,000 foot-candles (with Quartz filter) including leather carrying case	$368.00 s

Model 759 Foot-Lambert Meter

Model 759, 0-60/300 foot-Lamberts including separable hooded light target with VISCOR® filter, removable multiplier disc and calibration curve	$256.25 s

s—Normally carried in stock. Do not include "s" in your order write up!

Daystrom, Incorporated, DAYSTROM-WESTON SALES DIVISION, Newark 12, N. J., U. S. A.

Printed in U.S.A.

11-59-1

CIRCULAR B-22-G
JULY 1956

WESTON

LIGHT MEASURING INSTRUMENTS

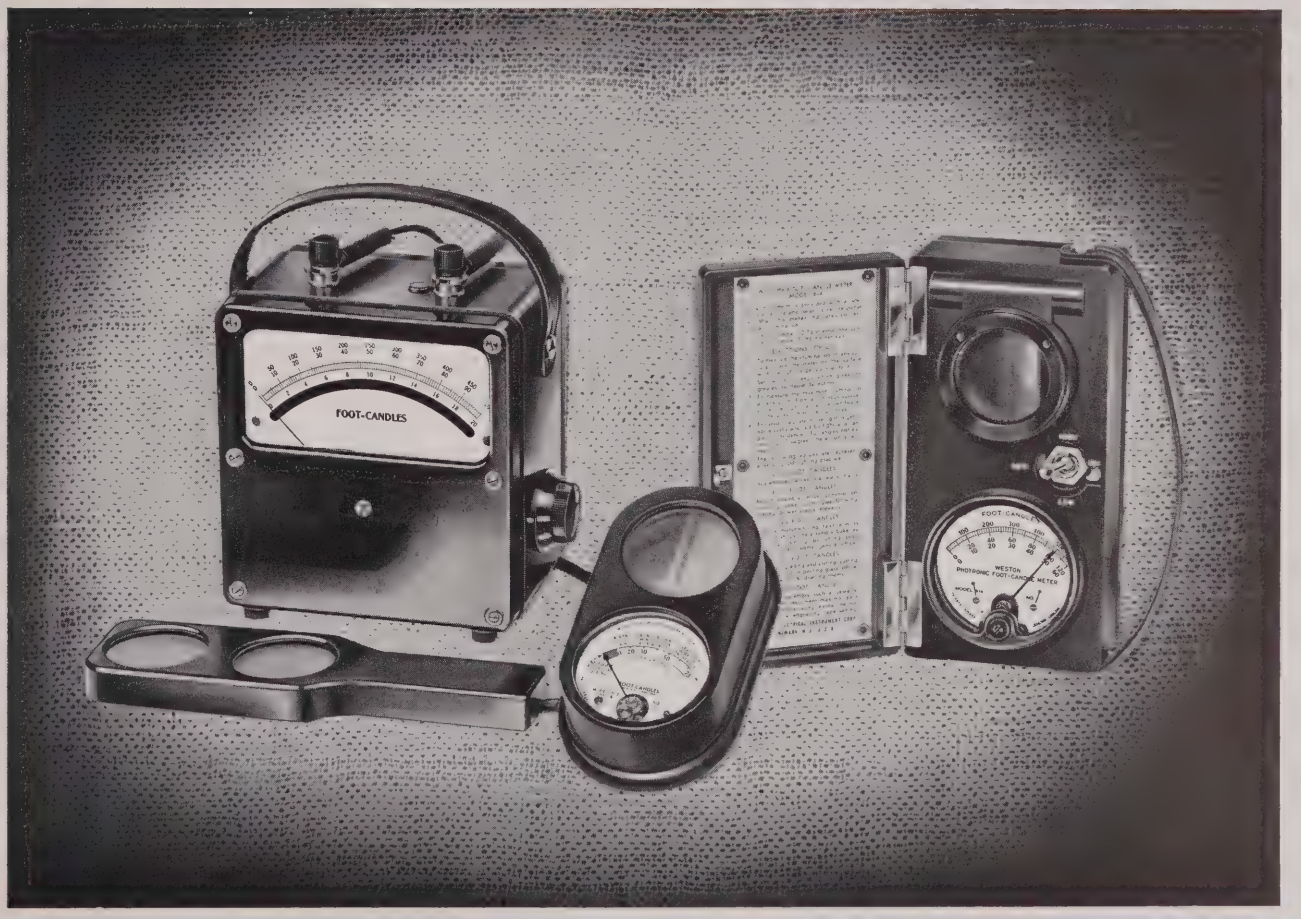

WESTON ELECTRICAL INSTRUMENT CORPORATION
A Subsidiary of Daystrom, Incorporated
Newark 5, New Jersey, U. S. A.

WESTON LIGHT MEASURING INSTRUMENTS . . .

Weston Light Measuring Instruments are invaluable tools for use by . . . public utilities in the promotion of more and better lighting . . . manufacturers of lamps . . . architects . . . liability insurance groups . . . industrial safety men . . . lighting engineers . . . etc. Designed around the Weston *PHOTRONIC barrier layer type photocell—a light sensitive unit which directly transforms light energy into electrical energy—these instruments are completely self-contained and permanently calibrated.

The ever increasing practice of mixing tungsten and fluorescent lighting and the arrangement of the tubes in long lines, make correct evaluation of the light very complicated without a fully corrected instrument.

Weston Light Measuring Instruments when equipped with cosine correction filters for direction and visual correction (†VISCOR) filters for color instantly indicate true foot-candles of any lighting source automatically, since they have the same color response to light as the human eye and evaluate all light falling on the surface regardless of direction.

Model 703 Sightmeter

Model 703 Sightmeters

Anyone can measure light with these pocket size direct reading instruments . . . place them on the chair, desk, or machine in home, office or factory . . . or hold them in your hand in whatever position the light is to be measured. The unique Sightmeter scale instantly indicates whether or not the light is adequate for a particular seeing task. They are invaluable aids in the promotion of better sight through the use of better light . . . ideal tools in the selling of home lighting equipment, such as lamps and reflectors.

The use of the Sightmeter Multiplier Disc over the *PHOTRONIC Cell will extend the range ten times its normal full scale value.

Model 703 Type 7 Sightmeter, 0-100 foot-candles (with †VISCOR and cosine correction filters)

Model 703 Type 6A Sightmeter, 0-75 foot-candles (with †VISCOR filter)

Model 703 Type 3A Sightmeter, 0-75 foot-candles (Unfiltered)

Model 9924 Multiplier Disc (x10), not usable with cosine corrected instruments

Model 9959 Leather Carrying Case

Multiplier Disc X 10

Model 703 Screen Illumination Meter

An instrument specifically designed to aid theater owners, managers and projectionists in accurately measuring the proper amount of light required for good projection of motion pictures. Uniform distribution of light over the entire screen can be accomplished by checking the intensity of light at various points, and adjusting the optical system of the projection equipment accordingly. Basically the same as Model 703 Sightmeter, the †VISCOR Filter equipped Screen Illumination Meter covers the recommended illumination levels as set by the Society of Motion Picture Engineers.

Model 703 Screen Illumination Meter, 0-30 foot-candles (with †VISCOR filter)

Model 614 Foot-Candle Meter

A versatile instrument for general commercial lighting surveys and measurements requiring a wide range of light values. No correction factors are necessary. Any type of commercial lighting can be measured directly with this compact Foot-Candle Meter. Ranges are selected through the operation of a conveniently located range-changing switch. The *PHOTRONIC Cell is mounted on a hinge, so that with the instrument lying flat, the cell can be tilted at an angle to facilitate measurements such as reflected light from a wall or ceiling.

Model 614 is entirely self-contained in a sturdy bakelite case, equipped with a hinged cover and leather carrying strap.

Model 614 0-100/250/500 foot-candles (with †VISCOR and cosine correction filters)

Model 614 0-60/120/600 foot-candles (with †VISCOR filter)

Model 614

**PHOTRONIC—A registered trade-mark designating the photoelectric cells and devices manufactured exclusively by Weston Electrical Instrument Corp.*

Model 756 Illumination Meter

A portable instrument for light measurements requiring a high degree of accuracy over broad range of light values. Ideal for research and routine work or as a master instrument for checking other light measuring instruments and devices. All types of commercial lighting, regardless of color composition, can be read directly—no correction factors are necessary. The †VISCOR filter corrects for color, the Cosine filter for angle of incidence. The unusually long mirror form of scale provides for accurate readings and eliminates parallax errors. Calibration is by direct comparison to accurate reference standard lamps.

The ranges in these instruments are selected by a convenient range changing switch, providing exceptionally good readability on low light values. The light target, housing two *PHOTRONIC Cells with 6 foot extension cable, connects to the color coded binding posts of the instrument. Additional cable may be added to further extend the light target. This permits easy readings in otherwise inaccessible places.

Model 756 including the separable light target is regularly supplied in a sturdy leather carrying case with a compartment for the light target. A convenient neck strap on the case frees the user's hands for manuevering the light target and taking notes.

Ranges

0-20/100/500 foot-candles (with †VISCOR and cosine correction filters)

0-20/50/500 foot-candles (with †VISCOR filter)

0-6/12/60/120/600 foot-candles (with †VISCOR filter)

Model 756

Model 756 Television Studio Illumination Meter

This instrument was designed to provide full coverage for the varied requirements of television studio lighting. Special ranges of 0-300 and 0-1500 foot-candles are suited for both black and white and for color. A special filter is provided to match the instrument spectral response to the #1850A iconoscope used for television film transmission.

The spectral response of the #5820 and #5826 image orthicons used as television camera pickup tubes are close enough to the standard luminosity curve so that the †VISCOR filter is recommended. A separate meter can be employed or an additional light target with Viscor filter can be supplied with a calibration curve for use with the Model 756 Television Studio Illumination Meter.

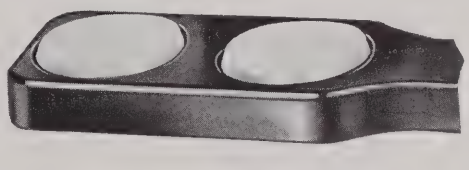

(Light target equipped with †VISCOR and cosine correction filters.)

Model 756 Sunlight Illumination Meter

This instrument incorporates ranges of 0-120/1200/12,000 foot-candles and requires only one *PHOTRONIC Cell equipped with a quartz filter so that the ultra-violet portion of the spectrum is included in the light measured. The extra high range coverage is ideally suited for making comparisons of natural sunlight intensities, or for any survey where high light intensities must be measured with a high degree of accuracy.

Agricultural bureaus, schools and industry find this meter indispensable for studying the effect of sunlight on paint, textiles and numerous other products.

Model 756 0-120/1200/12,000 foot-candles (with Quartz Filter)

Model 759 Foot-Lambert Meter

A versatile instrument for general brightness measurements, this instrument also meets the requirements of the television engineer as outlined by the Sub-committee on Phosphor and Optical Characteristics of the Joint Electron Tube Engineering Council. A VISCOR† filtered high output cell is used in conjunction with the very sensitive microammeter. The cell is equipped with a tubular baffle which restricts the oblique light and provides a basic range of 0 to 60 foot-Lamberts. A removable multiplier disc provides the second range of 0 to 300 foot-Lamberts.

In order to obtain optimum agreement between meters, a special set of lamps is maintained for the exclusive purpose of calibrating Model 759 Foot-Lambert Meters. By means of a specially calibrated filter, the meters are standardized at a color temperature of 6750 K. A calibration curve is furnished with each meter, but for maximum accuracy, meters should be standardized every six months.

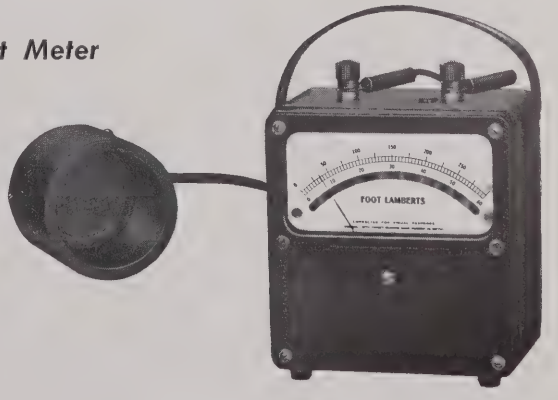

*†VISCOR—A registered trade-mark designating the visual correction filter available only in Weston *PHOTRONIC Cells and Illumination Meters. Instruments equipped with †VISCOR Filters measure correctly the visual intensity of practically all light sources.*

Advantages of †VISCOR and Cosine Correction Filters on Next Page.

Advantages of the †VISCOR and Cosine Correction Filters

By means of the †VISCOR and Cosine Correction Filters over the *PHOTRONIC Cell, it is possible to measure such illuminants as sodium, neon, mercury vapor or any other type of light source and the measurements are correct irrespective of the angle between the *PHOTRONIC Cell and the light source or sources.

Expressed technically, the †VISCOR Filter corrects the *PHOTRONIC Cell response to match the standard luminosity curve adopted by the International Commission on Illumination.

The Cosine Correction Filter corrects the *PHOTRONIC Cell response in accordance with Lambert's Cosine Law of Illumination.

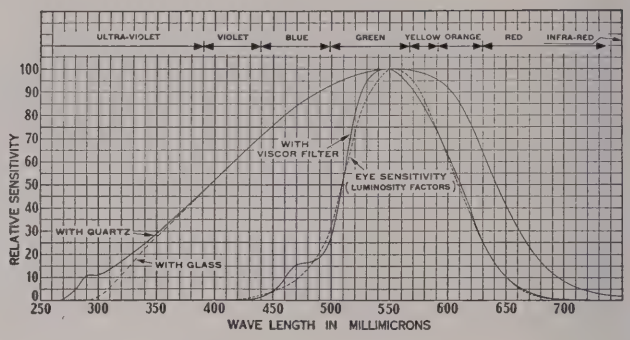

Spectral Sensitivity of Photronic Cells

—Typical WESTON Products—

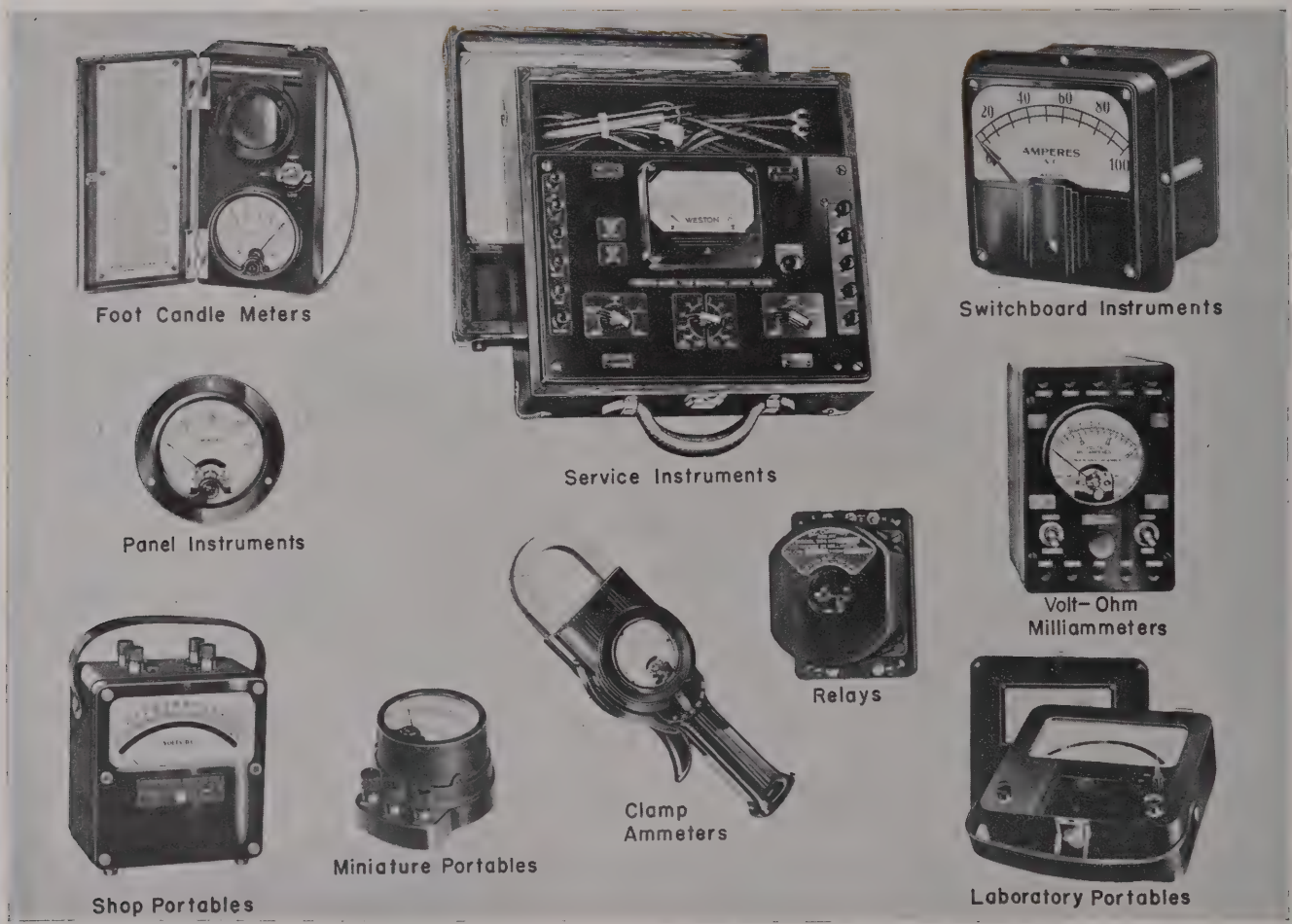

WESTON ELECTRICAL INSTRUMENT CORPORATION, NEWARK 5, NEW JERSEY, U. S. A.

A Subsidiary of Daystrom, Incorporated

Printed in U. S. A.

WESTON Service Test Equipment . . .

MARK II ANALYZER

Mark II
Model 980

• The new thin-line Mark II is a highly sensitive and extremely rugged volt-ohm-milliammeter designed for a wide range of accurate test measurements in the electronic field. It has a d-c sensitivity of 20,000 ohms/volt, and an a-c sensitivity of 1,000 ohms/volt. Accurary is 2% d-c, 3% a-c; 100 MV drop on current ranges.

The famous Weston CORMAG® mechanism protects the instrument against false readings due to magnetic disturbances. Electrostatic shielding assures accurate measurements at high d-c voltages. Fuses in the low ohmmeter circuits prevent burnout if voltages are mistakenly applied. Interchangeable parts eliminate all need for parts selection in the event replacements are ever necessary. The break-proof case will withstand dropping and thus eliminate the major source of repair and maintenance costs.

FEATURES

- Modern Thin-Line Design
- Spring Back Jewels for Maximum Shock Resistance
- Fused Resistance Ranges
- Static Shielded for Accurate High Voltage Measurement
- Fully Insulated Crack-Proof Case
- Single Selector Knob for all Functions and Ranges
- Wide Angle Scale for Maximum Visibility
- Precision Components — No Parts Selection Required
- Single Board Etched Wiring Circuit for Easy Maintenance
- Transit Switch Position to Dampen Movement During Transportation
- 4-Way Combination Tilt Stand and Protective Cover Available

SPECIFICATIONS

ACCURACY: 2% d-c; 3% a-c
SIZE: 7 9/16" x 6 1/4" x 3"
CASE: Black drop-resistant plastic
PANEL: Black drop-resistant plastic with engraved white markings
SCALE LENGTH: 4.63"
APPROX. WEIGHT: 2 lbs., 8 ozs.
SCALE: Black markings on white background

RANGES:

A-C Volts: 1.6, 8, 40, 160, 400, 1600 . . . at 1,000 ohms/volt
DB Ranges: −15 db to +54 db (in six ranges)
D-C Volts: 1.6, 8, 40, 160, 400, 800, 4000 . . . at 20,000 ohms/volt
D-C Microamperes: 80
D-C Milliamperes: 1.6, 8, 80, 800
Ohms: Four decade ranges; 1K to 10 meg full scale; 25 ohms to 250K center scale.

HIGH VOLTAGE PROBES: High voltage probes are available for measuring high voltages up to 20 kv at 50 microamperes or less. Probes have multiplier resistors encased in insulated handles. Multipliers are rated with a flash voltage of 30 kv.

LARGE EASY TO READ SCALE (Full Size)

NEW 4-WAY COVER This combination protective front cover and stand stores the test leads and instruction book and can be used four ways, as a . . .

Protective Cover | Horizontal Stand | Vertical Stand | Tilt Stand

P/N 177977

Weston Service Test Equipment . . .

ALL PURPOSE ELECTRONIC TUBECHECKER

• **The Weston Tubechecker Model 981 Type 3A is a new functional tubetester of the Proportional Mutual Conductance type. This model has been especially designed to bring together in one instrument the best features in a portable tubetester. The instrument consists of a vacuum tube and voltage regulator tester and is mounted in one complete assembly within an attractive grey hammertone finished steel case. Constructed of high quality components to assure accuracy and dependability of performance, Model 981 provides for the accurate and rapid measurement of proportional mutual conductances, emission characteristics of rectifiers and diodes, and the firing potential limits of voltage regulators and low power thyratrons.**

Model 981 Type 3A
Tubechecker

Size: 17.50" x 13.25" x 6.00".

Weight: 23½ lbs. (10.7 kgs.)

FEATURES

GM Measurements—Gm measurements are made more accurately by using filtered d-c plate, screen grid and control grid potentials. A precision voltage divider network and selector switch allows a proportionate value of signal voltage to be chosen for testing tubes having transconductances up to 30,000 micromhos. Signal voltages of 5.2, 2.6, 1.3, and 0.65 volts peak-to-peak having a frequency of 5000 cycles are provided.

Leakage Test—The leakage tests are performed at a d-c potential of 125 volts. For each numbered position of the Leakage Test switch, a specific tube element is isolated and connected into a series ohmmeter circuit consisting of the isolated element, the 125 volt d-c potential, a current limiting resistor, a milliammeter, and all other elements of the tube.

Meter Measurement of High Leakage Resistance—The outstanding feature is the provision for accurate leakage measurement between tube elements. Since tube leakage as high as several megohms can cause poor performance in TV receivers, this tubechecker is designed to provide an accurate meter measurement of leakage resistance as high as 5 megohms between tube elements, thus being particularly useful for TV servicing and TV line production assembly.

Multiple Switching Facilities—Protection against obsolescence over the conventional tubechecker is assured through the use of nine single circuit, twelve position, selector switches.

Twin Section Tubes—Three toggle switches make it possible to rapidly check and compare the respective sections of twin section tubes at only one setting of the selector switches.

Roll Index Chart—A complete listing of tube test data is available at the flick of a finger by means of an easy-to-read, built-in roll chart.

Grid Bias, Screen Grid and Plate Voltage—Filtered d-c potentials of 90, 130, and 220 volts are available for plate and screen potentials. A variable filtered d-c voltage in two ranges of 0-5 and 0-20 volts are used to obtain better resolution of Grid Bias settings. Far greater accuracy is obtainable with filtered d-c potentials than previously possible in portable tubecheckers.

Constant Current Filament Supply—A 600 ma constant current source for checking warm up type tubes used in series string television.

Subminiature Type Tubes—A 45 volt potential source facilitates testing of subminiature tubes.

Voltage Regulator Tubes—A selenium rectifier supply furnishes 200 volts d-c for testing of voltage regulator tubes.

Single Socket for Each Tube Base Regardless of Tube Connection—Only one socket for each type tube base regardless of tube base connection eliminates the possibility of plugging a tube into the wrong socket.

SPECIFICATIONS

Filament Voltage: .65, 1.1, 1.5, 2, 2.5, 0.6a, 3.3, 5, 6.3, 7.5, 10, 13, 20, 27.5, 35, 47, 70, 115.

Plate Voltage: 90, 130, 220 volts d-c. 22, 44, 160 volts a-c.

Grid Bias: 0-5 volts, 0-20 volts d-c.

Signal Voltages: 5.2, 2.6, 1.3, 0.65 volts peak-to-peak.

Gm Range: Up to 30,000 micromhos.

Power Requirements: 100 to 125 volts, 60 cycles single-phase a-c, 30 watts.

Case: Grey hammertone finished steel.

VACUUM TUBE VOLTMETER

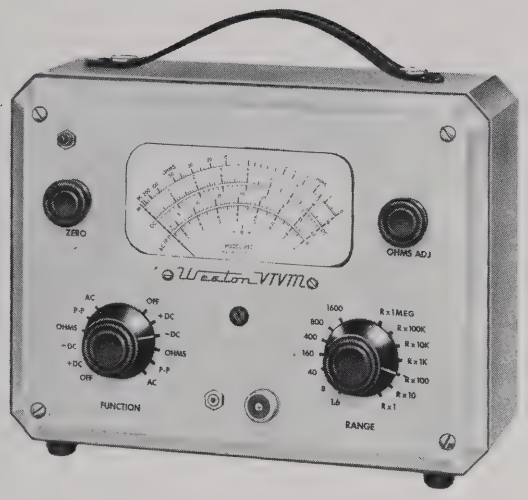

Model 982
Vacuum Tube Voltmeter

Size: 10" x 7.38" x 3.63" (254 x 187.3 x 92.1mm)

Weight: 6 lbs. (complete with batteries and accessories) (2.72 kgs.)

• The Weston Model 982 is a self-contained, battery operated Vacuum Tube Voltmeter. It is adaptable to the Radio-TV servicing industry where the requirements of peak-to-peak measurements of a-c voltages in high impedance circuits exclude the use of conventional peak-to-peak meters. It makes possible quantitative measurement of all complex wave form voltages utilized in video, sync and deflection circuits with no a-c line interference in critical measurements. Battery operation cost is considered less than price to operate a-c powered voltmeters.

SPECIFICATIONS

Accuracy: ±3% d-c, ±5% a-c RMS; sinusoidal wave form.

Scale Length: 4.63"

Impedance: 10 megohms d-c; 2.8 megs a-c RMS; 1 meg a-c, peak-to-peak.

Functions	Ranges						
D-C Volts	1.6	8	40	160	400	800	1600
A-C Volts	1.6	8	40	160	400	800	1200
P-P Volts	1.6	8	40	160	400	800	1600
Low-C Probe P-P Volts	16	80	400	1600			
Ohms	X1Meg	X100K	X10K	X1K	X100	X10	X1 (10 ohms center)

Battery Life: Battery A*—Approx. 90 days—is easily replaceable. (Standard 1.5 Volt, Size D Cell). Battery B—Shelf Life Approx. 1 year.

*Based on maximum use—8 hours per day.

Case: Grey hammertone finished steel.

Panel: Aluminum finish with markings etched in black.

FEATURES

Unit is Battery Operated—Unit affords complete isolation from spurious response due to stray a-c fields and circulating ground currents. Extremely low drain for long battery life. **Power Consumption:** Less than 25 milliwatts.

No Switching of Leads is Required—One shielded lead is used for all measurements, a-c, d-c, ohms and peak-to-peak.

Range Function Switch—Makes negative and positive d-c potentials measurable DIRECTLY.

High Input Impedance—10 megohms on d-c for accurate measurements—2.8 megohms a-c RMS—1 megohm a-c, peak-to-peak.

No Zero Scale Drift—Instrument can be used immediately without waiting for warm up . . . resetting of zero corrector when switching from range to range is entirely eliminated.

D-C Isolation Adaptor—Makes d-c measurements possible in the presence of a-c voltages. (Supplied with instrument).

Frequency Response—Suitable for measurement of TV wave forms, such as sync pulses, saw tooth, drive voltages, and other complex wave form voltages.

A-C Volts: 20 cps—1.5 kc. Peak-to-Peak Volts: 20—300 kc.

For voltages above 160 volts peak-to-peak containing frequency components up to 300 kc a low capacitance probe is furnished.

Discriminator Alignment—Zero corrector knob has sufficient latitude to center scale.

RF and Low Capacitance Probes—Are available as accessories.

Low Capacitance Adaptor—Makes peak-to-peak measurements possible with an input impedance of 10 megohms and a shunt capacitance of only 15 mmf. This circuit makes it easy to service TV horizontal and vertical sections with minimum circuit loading. (Supplied with instrument).

Reset Button: Facilitates rapid readings on peak-to-peak or a-c measurements.

For Probes used with Model 982 refer to page 4.

Weston Service Test Equipment . . .

SWEEP GENERATOR

• **The Weston Model 984 is a top performance instrument precision built for effective trouble shooting of sound and video IF circuits, associated trap circuits, TV tuners, video amplifiers and all-purpose visual alignment. It has a high output voltage, flat within ± ½ db over a 10 megacycle sweep width.**

FEATURES

● **Blanking:** Special circuitry produces a zero output reference base which is essential for relative gain measurements.

● **RF Output:** Frequency modulated signal, TV channels 2 to 13 inclusive, complete FM coverage available by means of two preset selector positions. **FREQUENCIES ARE FUNDAMENTALS OF THE OSCILLATOR FREQUENCY.**

● **IF/VIDEO Output:** Frequency modulated signals ranging to 50 megacycles, continuous tuning, signals free from harmonics.

● **Sweep Width:** Full 10 megacycles on all channels.

● **Scope Terminals:** For scope without 60 cycles phased position.

● **Circuit Description:** A 6T6 tube is used as a pushpull RF sweep oscillator. This oscillator is frequency modulated at 60 cycles by the mechanical motion of capacitor plates. A 60 cycle a-c voltage impressed across the voice coil actuates the plates of these capacitors and the relative motion of the coil is determined by the setting of the sweep width control. By means of the channel selector switch the appropriate channel center frequency is obtained. Coils utilized are the permeability type and are adjusted at the factory. The amplitude level of the RF output signal is controlled by the attenuator.

Model 984
Sweep Generator

Size: 13.50" x 10" x 6.75" **(342.9 x 254 x 171.4 mm)**
Weight: 14 lbs., 4 ozs. **(6.47 kgs.)**

SPECIFICATIONS

Sweep Width: 0-10 Megacycles (continuously variable for both IF and RF).

Output Voltage (RMS): 0.1 Volt . . . sweep is linear.

RF Output: TV channels 2 to 13 preset. Complete FM coverage available by means of two additional preset selector positions.

IF/Video Output: 50 Megacycles (continuous tuning).

Horizontal Sweep for Oscilloscope: Phase adjustment range: 165°; Frequency: Power Line 50-60 cycles per second.

Cable Termination: RF output 300 ohms balanced. IF output 100 ohms.

Power: 105/125 volts, 50-60 cycles.

Tube Complement: 6J6, 6U8, 12AT7, 6X4.

Case: Grey hammertone finished steel.

Panel: Etched aluminum satin finish.

ACCESSORIES FOR WESTON TEST EQUIPMENT

HIGH VOLTAGE PROBES—For Models 980-982
For measuring high voltages up to 20 kv at 50 microamperes or less. Probes consist of multiplier resistor encased in an insulated probe handle. Multipliers are rated with a flash voltage of 30 kv.

RF PROBE—For Model 982
Used in conjunction with a VTVM makes it possible to read RF voltages at frequencies as high as 250 megacycles present in TV and radio receivers. Voltage is indicated in terms of RMS on a sine wave.

LOW CAPACITANCE PROBE—For Model 982
Used in trouble-shooting high impedance circuits to prevent loading. Has input impedance of 2 megohms shunted by only 15 micromicrofarads.

CARRYING CASES
When ordering please specify model number of instruments with which they are to be used. Cases available for Models 980 and 982.

Printed in U.S.A. 5-59

PRICE LIST 07-100

EFFECTIVE NOVEMBER 9, 1959

Service Test Equipment

All Prices Subject to Change Without Notice and are F.O.B. Factory, Newark 12, N. J.

SUPERSEDES 9/15/58

Model 980 Mark II	$ 49.50 s
Combination Cover and Tilt Stand for Model 980 Mark II	5.50 s
Model 981 Type 3A	311.75 s
Model 982	86.00 s
Carrying Case for Model 982 P/N 158530	9.00
Model 984	165.00 s

Probes

Model 9896 High Voltage for Model 980, P/N 153058	$ 14.75 s
Model 9896 High Voltage for Model 982, P/N 153057	14.75 s
Model 9895 RF for Model 982, P/N 158515	7.70 s
Model 9894 Low Capacitance for Model 982, P/N	3.25

s—Normally carried in stock. Do not include "s" in your order write up!

Daystrom, Incorporated, DAYSTROM-WESTON SALES DIVISION, Newark 12, N. J., U. S. A.

Printed in U.S.A.

11-59-1

STRIP CHARTS

IRON CONSTANTAN, TYPE "J"

−100 to 100°F
−200 to 200°F
0 to 200°F
0 to 300°F
0 to 400°F
0 to 500°F
0 to 600°F
−100 to 600°F
0 to 800°F
700 to 900°F
0 to 1000°F
850 to 1050°F
600 to 1100°F
0 to 1200°F
400 to 1400°F
1000 to 1500°F
0 to 1600°F
0 to 1800°F
0 to 100°C
0 to 200°C
0 to 300°C
0 to 400°C
0 to 600°C
0 to 800°C
0 to 1000°C

COPPER – CONSTANTAN, TYPE "T"

−250 to 100°F
0 to 100°F
−100 to 150°F
−50 to 150°F
0 to 160°F
30 to 160°F
−60 to 180°F
−20 to 180°F
60 to 180°F
100 to 200°F
−150 to 200°F
−20 to 220°F
−50 to 250°F
−100 to 300°F
0 to 300°F
0 to 400°F
0 to 510°F
0 to 800°F
−200 to 40°C
−85 to 75°C
0 to 100°C
−75 to 125°C
−40 to 160°C
0 to 200°C
−50 to 250°C
0 to 300°C

CHROMEL – ALUMEL, TYPE "K"

550 to 1150°F
0 to 1200°F
0 to 1650°F
0 to 1800°F
800 to 1800°F
0 to 2000°F
0 to 2400°F
1200 to 2400°F
0 to 300°C
0 to 1000°C
0 to 1400°C

PLATINUM – 10% RHODIUM-PLATINUM, TYPE "S"

0 to 3000°F
1000 to 3000°F
200 to 1000°C
0 to 1600°C

PLATINUM – 13% RHODIUM-PLATINUM, TYPE "R"

1800 to 2600°F
0 to 3020°F
1000 to 3020°F
0 to 1650°C

CHROMEL 20-10 (KA25) THERMOCOUPLE

0 to 1800°F

NICKEL – NICKEL MOLYBDENUM THERMOCOUPLE

0 to 2350°F

HYDROGEN ION CONTENT (pH)

0 to 7pH
3 to 10pH
2 to 12pH
6 to 13pH

NICKEL RESISTANCE BULB (100 OHMS at 25°C)

80 to 180°F

PLATINUM RESISTANCE BULB (25 OHMS at 32°F)

−70 to 150°F
0 to 300°F

COPPER RESISTANCE BULB (10 OHMS at 25°C)

20 to 120°C

EQUAL DIVISION CHARTS

0 to 2.5
−4 to +4
0 to 5
0 to 7
0 to 10
3 to 10
−1 to 11
2 to 12
6 to 13
0 to 15
0 to 15
−5 to 20
0 to 20
0 to 30
0 to 40
−150 to 50
−50 to 50
0 to 50
0 to 60
0 to 80
0 to 100
0 to 100
0 to 100
−100 to 100
−120 to 120
80 to 180
−150 to 250
0 to 300
0 to 300
350 to 450
0 to 500
0 to 800
350 to 1050
0 to 5000
0 to 7500
0 to 50,000

Double Range:

0 to 150
0 to 300

Two Zone for 6747

0 to 10
0 to 10

RECORDING CONDUCTIVITY

0-5 Microhms

LOGARITHMIC CHART

6 Decade

(OVER)

CIRCULAR CHARTS

SERIES 7000 RECORDERS

TEMPERATURE, CLASS 1, 3, 5

–100 to 100°F or C
–40 to 110°F or C
0 to 50°F or C
0 to 100°F or C
0 to 110°F or C
0 to 150°F or C
0 to 150°F or C
0 to 200°F or C
0 to 300°F or C
0 to 400°F or C
0 to 500°F or C
0 to 600°F
0 to 800°F
0 to 1000°F
60 to 160°F or C
200 to 400°F or C
400 to 800°F

PRESSURE AND VACUUM

30" Vacuum to 30 psi
30" Vacuum to 200 psi
0 to 10 psi*
0 to 15 psi*
0 to 30 psi
0 to 50 psi
0 to 100 psi
0 to 200 psi
0 to 300 psi
0 to 400 psi
0 to 500 psi
0 to 800 psi
0 to 1000 psi
0 to 1500 psi

TEMPERATURE, CLASS 2

50 to 150°F
100 to 250°F
100 to 350°F
200 to 450°F
250 to 500°F

COMBINATION CHARTS

0 to 110°F or C
0 to 550 psi

0 to 200°F or C
0 to 500 psi

0 to 300°F or C
0 to 600 psi

0 to 500°F
0 to 1000 psi

TRAVELING RECORDER

30 to 165°F

0 to 75°C

0 to 60°R

SERIES 6800 RECORDERS

IRON CONSTANTAN "J"

–200 to 200°F
0 to 300°F
0 to 500°F
0 to 800°F
0 to 1000°F
600 to 1100°F
0 to 1200°F
400 to 1400°F
0 to 1600°F
0 to 200°C
0 to 400°C
0 to 800°C

CHROMEL ALUMEL "K"

0 to 1200°F
0 to 1650°F
0 to 1800°F
800 to 1800°F
0 to 2000°F
0 to 2400°F
1200 to 2400°F
0 to 300°C
0 to 1000°C
0 to 1400°C

PLATINUM-PLATINUM RHODIUM "S"

0 to 3000°F
1000 to 3000°F
0 to 1600°C

PLATINUM-PLATINUM RHODIUM "R"

1800 to 2600°F
1000 to 3020°F
0 to 1650°C

COPPER CONSTANTAN "T"

–250 to 100°F
0 to 100°F
–100 to 150°F
0 to 160°F
60 to 180°F
–50 to 250°F
–100 to 300°F
0 to 300°F
0 to 400°F
0 to 100°C
–75 to 125°C
0 to 200°C

pH

0 to 7
3 to 10
2 to 12
6 to 13

RESISTANCE BULB PLATINUMS

0 to 100°F
0 to 300°F

EQUAL DIVISION

0 to 100
0 to 150
0 to 300
0 to 400
0 to 500
0 to 600
0 to 800
0 to 30
0 to 10
0 to 50

WESTON INSTRUMENTS, DIVISION OF DAYSTROM, INCORPORATED, NEWARK 12, N.J., U.S.A.

PRINTED IN U.S.A.

08-600-A
MARCH 1959

NEW! REVOLUTIONARY! WESTON D-PAK®

SELF-CONTAINED, CONSTANT CURRENT SOURCE!

- the first high-precision constant current source for industrial potentiometers!
- eliminates many conventional components — and their maintenance!
- provides stable current supply within .05% accuracy — five times greater than the .25% accuracy of industrial potentiometers themselves!
- compensates fully for supply voltage variations down to .001% per volt!
- provides full-time accuracy; does away with interruptions in measurement for standardization!
- functions indefinitely; is not significantly affected by changes in ambient temperature!

The D-PAK makes use of refinements in semiconductor techniques which have brought under control the Zener or "avalanche" effect for voltage regulation. The circuitry is all solid state . . . there are no vacuum tubes, no moving mechanical parts. Available for use in a number of Daystrom-Weston instruments.

For further information about the D-PAK or the instrument in which it is used, contact your local Weston representative, or write to Weston Instruments, Division of Daystrom, Inc., Newark 12, N. J. *In Canada: Daystrom Ltd., 840 Caledonia Rd., Toronto 10, Ont. Export: Daystrom Int'l., 100 Empire St., Newark 12, N. J.*

Replacing

batteries . . . standard cells . . . standardizing mechanisms

DAYSTROM-WESTON

Industrial Instruments

A DAYSTROM UNIT

[SPECIFICATIONS ON OTHER SIDE]

Specifications

PERFORMANCE:

1. Input: 107-127 volts, 50-60 c.
2. Power Requirement: 5 watts.
3. Operating Temperature Range: 0-60 deg. C.
4. Output Voltages and Loads for 117 volt Supply and at 25 deg. C.

Terminal Connection	Load, ohms	Output, volts
(—) and (#1 +)	104.44	1.0444 ± .0005
(—) and (#2 +)	126.94	1.2694 ± .0006

5. Variation of Output within Supply Voltage and Temperature Limits: 0.1 per cent.
6. Variation of Output with Change in Supply Voltage: less than .001 per cent per volt.
7. Variation of Output with Temperature: less than .003 per cent per degree C.

OVERALL DIMENSIONS:

2¾ wide x 3$\frac{1}{16}$ high x 4⅛ long, (5$\frac{3}{16}$ long incl. mounting flanges).

DAYSTROM-WESTON

CIRCULAR CHART RECORDING POTENTIOMETER

Model 6801 Potentiometer

- Dust-proof Case—requires small panel space.
- Neutral Gray Finish—blends well with any color.
- 12-inch Chart; Full Scale Pen travel of 4⅝".
- Scale 33.86" long; concentric 320°; larger, easily read numerals; scale rigidly supported on back plate assembly—permits calibration or indicator reading with door open.
- Indicator Pointer driven from behind scale plate; pointer does not obscure chart; facilitates chart replacement.
- Plug-in Amplifier—no solder connections.

Model 6821 Wheatstone Bridge

- Easily Replaceable Range Standards—no solder connections.
- Full Scale response times of 5, 10 and 20 seconds.
- Universal Mounting—fits standard relay rack.
- D-PAK Constant Voltage Supply Unit eliminates batteries, standard cell, and standardizing mechanism in potentiometer.
- Battery Eliminator supplied in Wheatstone Bridge.
- Flush Latch Handle—lock recessed in door.
- Optional Features—alarm contacts (maximum of six).

General

Daystrom-Weston Models 6801 and 6821 Circular Chart Recorders are of the null-balancing type. They employ a line driven synchronous converter and amplifier to control a two-phase motor and unbalance the measuring circuit.

These instruments are ruggedly constructed for long life, trouble free service and are practically immune to vibration and shock. A plug-in amplifier, easy replaceable range standards, and interchangeable slide wires make these instruments adaptable to a wide variety of applications. The plug-in amplifier is readily removed for replacement or service and the tubes are available at any radio supply store.

Specifications

Case—reinforced sheet steel; cast door; gray finish; dust and fume resistant.

Dimensions—17¾" w x 18¾" h x 15" d

Mounting—universal; flush, wall or table.

Lock—recessed in door casting.

Connection Terminals—enclosed; conduit openings, back, side and bottom.

Accuracy—*Potentiometer:* ±¼% of span or ±.025 mv, whichever is greater. *Wheatstone Bridge:* ±¼% of span or ±½F, whichever is greater.

Chart—12" diameter; full scale Pen Travel 4⅝".

Scale—Concentric 320°; 33.86" long.

Calibration—many standard ranges for Potentiometer or Wheatstone Bridge. For spans below 2 millivolts, refer to Factory.

Number of Pens—one.

Measuring Circuit Voltage Supply—no dry cell, standard cell, or standardizing required. D-PAK constant voltage supply unit standard on Potentiometer. Battery Eliminator standard on Wheatstone Bridge.

Continued on Other Side

Reference Junction Compensation—Automatic on Potentiometer calibrated for use with thermocouples.

Chart Speed—Standard chart speeds are 7 days, 48, 24, 12, 8, 4 or 1 hour per revolution.

Operation—a-c only, 115 volts, 60 cycles or 115 volts, 50 cycles as specified. An external transformer is required for 220 volt operation.

Full Scale Response Time—5, 10, and 20 seconds for 60 cycle operation.
6, 12, and 24 seconds for 50 cycle operation.

Optional Features—alarm contacts—provisions are made for the addition of six SPDT back set, individually adjusted switches. Rating 3 amperes, 115 volts a-c, non-inductive.

How To Order

1. Model
2. Range
3. Scale
4. Chart
5. Calibration
6. For use with (Specify Actuating Device)
7. Operation, Voltage and Frequency
8. Pen Speed
9. Chart Speed
10. Special Features, such as Alarm Contracts, etc.

Prices Available Upon Application

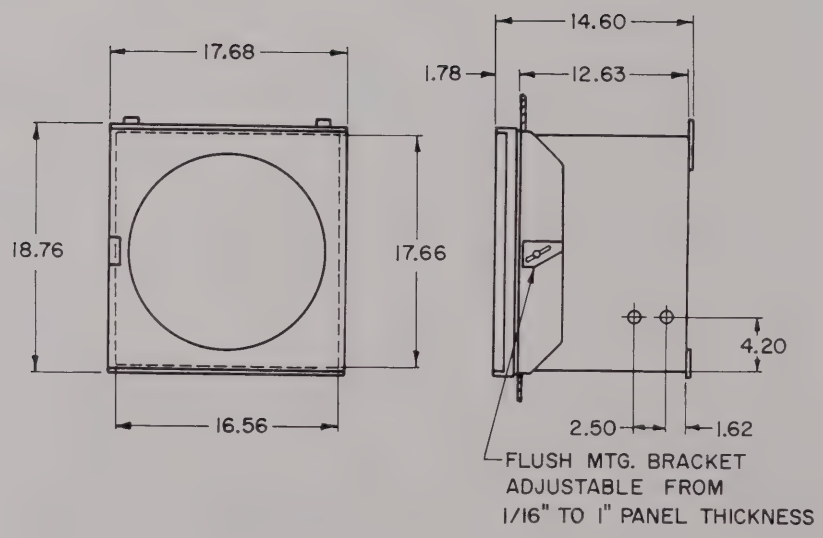

Approximate dimensions. Certified drawings available on request.

WESTON INSTRUMENTS, DIVISION OF DAYSTROM, INCORPORATED, NEWARK 12, N. J., U.S.A.

PRINTED IN U.S.A.

DAYSTROM-WESTON

SINGLE POINT RECORDER

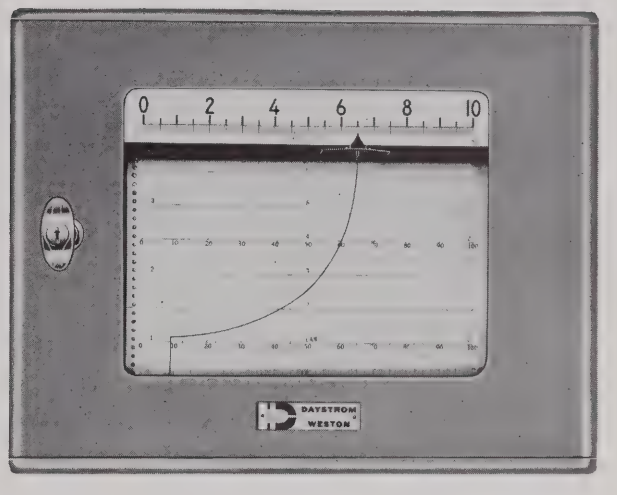

Model 6701 Potentiometer or Wheatstone Bridge

- Dust-resistant Case—only 17¾" W x 13½" H x 15" D overall; requires small panel space.
- 10" Scale—easily read.
- Plug-in Amplifier—no solder connections.
- Exclusive Easily-Replaceable Range Standards.
- Available in 1, 2, 10 or 20-second speeds across full 10" scale.
- Universal Mounting—fits standard relay rack.
- D-PAK Constant Voltage Supply Unit eliminates batteries, standard cell, and standardizing mechanism in potentiometer.
- Battery Eliminator supplied in Wheatstone Bridge.
- Interchangeable Slidewire—totally enclosed for complete protection.
- Optional Features—Chart Tear-off. Alarm Contacts (maximum of six).

General

Daystrom-Weston Model 6701 Single Point Strip Chart Recorders are of the null-balancing type. They employ a line driven synchronous converter and amplifier to control a two-phase motor and rebalance the measuring circuit.

These instruments are ruggedly constructed for long life, trouble free service and are practically immune to vibration and shock. A plug-in amplifier, easy replaceable range standards, interchangeable slide wires and quickly changed chart speeds make these instruments adaptable to a wide variety of applications.

The plug-in amplifier is readily removed for replacement or service and the tubes are available at any radio supply store.

. . . A pen that never pumps or siphons-off, requires no priming, does not tear charts even at low speeds and automatically lifts when chart frame opens . . . are additional features.

Specifications

Case—Reinforced sheet steel; cast door; grey finish; dust and fume resistant.

Dimensions—17¾" W x 13½" H x 15" D overall.

Mounting—Universal; flush, wall or table.

Lock—In door handle.

Connection Terminals—Enclosed; conduit openings back, side, and bottom.

Accuracy—Within ±¼% of span or ±.025 mv whichever is greater on Potentiometer, and ±¼% of span or ±12.5 milliohms whichever is greater on Wheatstone Bridge.

Continued on Other Side

Number of Points—One.

Scale—10" calibrated width, with large selection of standard markings.

Calibration—Many standard ranges for Potentiometer or Wheatstone Bridge.

Reference Junction Compensation—Automatic on Potentiometer calibrated for use with Thermocouples.

Standardization—Eliminated through use of D-PAK on potentiometer and battery eliminator on Wheatstone Bridge models.

Operation—A-C only, 115 volts, 60 cycles, or 115 volts, 50 cycles as specified. An external transformer is required for 220 volt operation.

Carriage Speed — Approximately 1, 2, 10 or 20 seconds, as specified. Standard is 20 seconds.

Chart Speeds:

Multiple—1, 2, 3, 4 and 6 inches per hour, or 2, 4, 6, 8 and 12 inches per hour, or 4, 8, 12, 16 and 24 inches per hour

Single—Speeds ranging from 24 to 960 inches per hour (20 steps).

Optional Features:

Alarm Contacts—Provisions are made for the addition of six separate SPDT back set, individually adjusted switches. Rating 3 amperes, 115 volts a-c, non-inductive.

Time Operation Pen—Single or double unit.

Actuations — Temperature, Pressure, Flow, Speed, pH, Conductivity, Humidity, Gas Chromatography, Volts, Amps, Watts, Millivolts, Milliamps, Speed Ratio and many others.

How To Order

To be sure of receiving the proper Recorder for your particular application, be sure to give the following information:

1. Model Number of Daystrom-Weston Recorder
2. Scale Range
3. Chart Range
4. Reference Junction Compensation, if required
5. For Use With (specify type of thermocouple or other actuating device)
6. Supply Voltage and Frequency
7. Carriage Speed
8. Chart Speed
9. Special Features, such as Alarm Contacts, etc.

Prices Available Upon Application

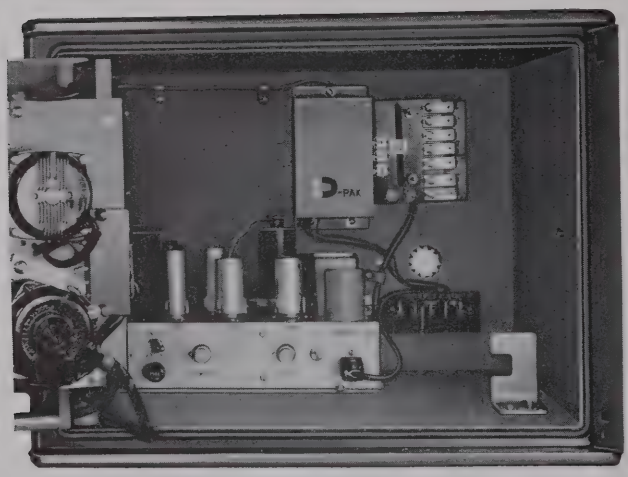

Front View, Door Opened.

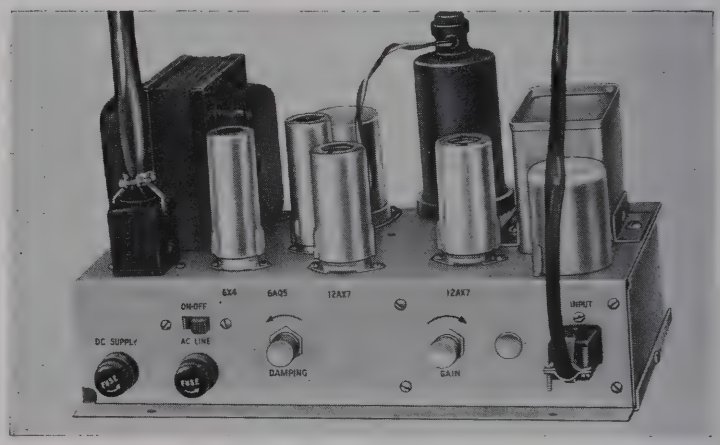

View Showing Plug-in Amplifier.

WESTON INSTRUMENTS, DIVISION OF DAYSTROM, INCORPORATED, NEWARK 12, N. J., U.S.A.

PRINTED IN U.S.A.

CIRCULAR P-16-B
NOVEMBER 1957

WESTON
2 PEN—2 ZONE RECORDER

Model 6747 Potentiometer *Model 6757 Wheatstone Bridge*

Features

- Dust-proof Case.
- Two 4½" scales — easily read.
- Plug-in Amplifier — no solder connections.
- Exclusive Easily-Replaceable Range Standards.
- Fast 2 second carriage speed across each 4½" scale.
- Universal Mounting — fits standard radio rack.
- Semi-Automatic or Fully Automatic Standardization on Potentiometer.
- Replaceable Stylus on Pens.
- Battery Eliminator for Wheatstone Bridges, if specified.
- Interchangeable Slidewires — totally enclosed for complete protection.
- Each Zone Independent — separate measuring and amplifying circuit.

General

The Weston Models 6747 and 6757, Two Pen — Two Zone Recorder is actually two independent instruments housed within a single case. It employs two electronic amplifiers with the instrument operating on a null balance principle. This recorder is ideally suited for comparative measurements both in the laboratory and on the production line. Two second full scale pen speed is standard.

The instrument consists of two completely separate measuring circuits permitting use of replaceable range standards for quick range change on only one or both zones as desired.

Alarm switches are available for each zone and can be set in a matter of seconds. Quickly changed chart speeds help make this a most versatile instrument.

Specifications

Case—Reinforced sheet steel; cast door; black finish; dust and fume resistant.

Dimensions—17¾" W x 18¾" H x 15" D.

Mounting—Universal (flush, wall or table).

Lock—In door handle.

Connection Terminals—Enclosed; conduit openings back, side, and bottom.

Accuracy—Within ±¼% of span or ±.025 mv whichever is greater on Potentiometer, and ±¼% of span or $\pm 12.5 \times 10^{-3}$ ohms whichever is greater on Wheatstone Bridge.

Continued on Other Side

Scale—Two 4½" Calibrated Zones.

Calibration—Many standard ranges for Potentiometer or Wheatstone Bridge. For spans below 2 millivolts and ranges not listed in Circular P-7, refer to the factory.

For Thermocouple Instruments—Automatic cold reference junction compensation.

Chart Speeds—1" per hour to ½" per minute continuous, is standard. Higher chart speeds available with special motor.

Standardizing—*Potentiometer:* Fully Automatic every 45 minutes, or Semi-Automatic, as specified.

Wheatstone Bridge: None required. Battery Eliminator when specified.

Operation—A-C only, 115 volts, 60 cycles, or 115 volts, 50 cycles as specified. An external transformer is required for 220 volt operation.

Carriage Speed—2 seconds per each zone only.

Alarm Contacts—Each zone has provision for the addition of six separate SPDT back set, individually adjusted switches. Rating 3 amperes, 115 volts a-c nonconductive.

How To Order

Please provide the following information so that you will be sure to receive the proper Recorder for your particular application:

1. Model
2. Type Number
3. Scale
4. Calibration
5. Reference Junction Compensation, if required.
6. For use with (specify actuating device)
7. Standardization
8. Operation, Voltage and Frequency
9. Carriage Speed
10. Chart Speed
11. Special Features, such as Alarm Contacts, etc.

Prices Available Upon Application

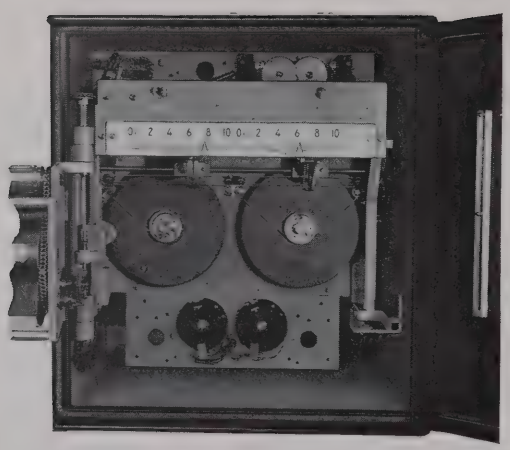

Front View, Door Open with Chart Frame Swung Out.

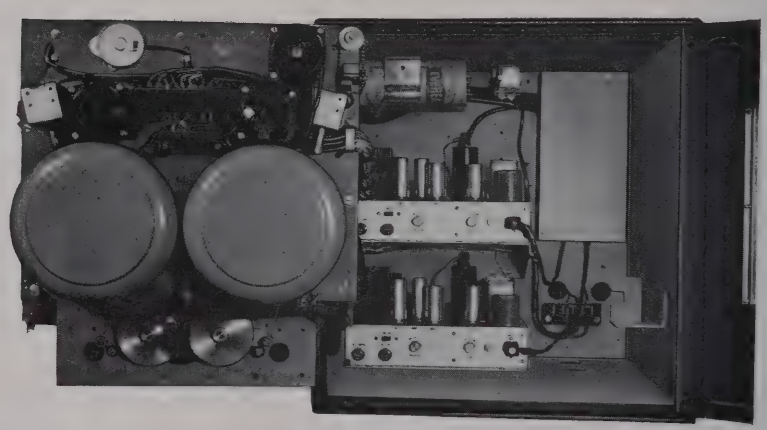

Main Frame Swung Out Showing Dual System.

WESTON ELECTRICAL INSTRUMENT CORPORATION

A Subsidiary of Daystrom, Incorporated

NEWARK 12, NEW JERSEY, U.S.A.

Printed in U. S. A.

DAYSTROM-WESTON

STRIP CHART MULTIPLE POINT RECORDER

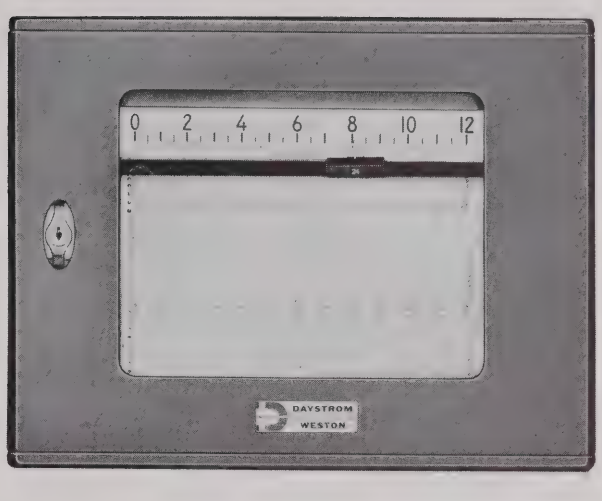

2 to 24 Points Readily Changeable!

Model 6702 Potentiometer or Wheatstone Bridge

- Dust-proof Case—only 17¾" W x 13½" H x 15" D overall; requires small panel space.
- 10" Scale—easily read.
- Plug-in Amplifier—no solder connections.
- Exclusive Easily-Replaceable Range Standards.
- Available in 2, 10 or 20-second speeds across full 10" scale.
- Universal Mounting—fits standard relay rack.
- D-PAK Constant Voltage Supply Unit eliminates batteries, standard cell, and standardizing mechanism in potentiometer.
- Battery Eliminator supplied in Wheatstone Bridge.
- Interchangeable Slidewire—totally enclosed for complete protection.
- Number of Points—from 2 to 24, interchangeable.
- Printing Speeds—from 3 to 60 seconds per point, readily changed.
- Selector Switch—new long life etched circuit; point connected identified in window below pointer; manual advance from front of instrument; extra decks can be supplied for special applications.
- Alarm Contacts—up to six additional back set SPDT switches.
- Stops Printing when chart mechanism is swung out.

General

Models 6702 Strip Chart Multiple Point Recorders are part of the Daystrom-Weston 6700 series and can record up to twenty-four points on one instrument. Employing an electronic amplifier these instruments operate on the null balance principle.

A new long life etched circuit multiple switch, unit assemblies, and typical rugged Daystrom-Weston design insures trouble-free operation.

Alarm switches which are easily added, can be set in a few seconds, and are made selective by additional decks in the multiple switch. Multi-or uni-colored numbered dot printing and internal fluorescent lighting (optional) are among some of the features available.

Design features include plug-in components, which provide for "quick" changing of the number of points and type of thermocouple.

Replaceable range standards, easily changed chart speeds, and a simplified method of changing printing speed makes this recorder readily adaptable to a wide variety of applications.

Specifications

Case—Reinforced sheet steel; cast door; grey finish; dust and fume resistant.

Dimensions—17¾" W x 13½" H x 15" D overall.

Mounting—Universal; flush, wall, or table.

Lock—In door handle.

Connection Terminals—Enclosed; conduit openings back, side, and bottom.

Accuracy—Within ±¼% of span or ±.025 mv whichever is greater on Potentiometer, and ±¼% of span or ±12.5 milliohms whichever is greater on Wheatstone Bridge.

Number of Points—2, 3, 4, 6, 8, 12 or 24. Models with 10, 16, 18, or 20 points also available where some points print twice as often.

Continued on Other Side

Printing—Uni-colored or multi-colored numbered dots. (Maximum 6 colors.)

Scale—10" calibrated width, with large selection of standard markings.

Calibration—Many standard ranges for Potentiometer or Wheatstone Bridge. For potentiometer spans below 2 millivolts or Wheatstone Bridge spans below 10 ohms refer to the factory.

Reference Junction Compensation—Automatic on Potentiometer calibrated for use with Thermocouples.

Standardization—Eliminated through use of D-PAK on potentiometer and battery eliminator on Wheatstone Bridge models.

Operation—A-C only, 115 volts, 60 cycles, or 115 volts, 50 cycles as specified. An external transformer is required for 220 volt operation.

Carriage Speed—To suit printing speeds.

Printing Speed—3, 5, 6, 7.5, 10, 12, 15, 20, 30 or 60 seconds, as specified. Higher speeds on application.

Chart Speeds:

Multiple—1, 2, 3, 4 or 6 inches per hour
2, 4, 6, 8 or 12 inches per hour
4, 8, 12, 16 or 24 inches per hour

Single—Speeds ranging from 24 to 960 inches per hour (20 steps).

Alarm Contacts—Provisions are made for the addition of six separate SPDT back set, individually adjusted switches. Rating 3 amperes, 115 volts a-c, non-inductive. Selective alarming also available.

Illumination—Internal fluorescent, if specified.

Actuations—Can be used to record Temperature (thermocouple, resistance bulb or Radiation Pyrometer), Pressure, Flow, pH, Conductivity, Speed, Volts, Amps, Watts, Millivolts, Milliamps, Turbidity, Strain, Weight and any other variable where the measuring transducer supplies a millivolt or milliamp signal.

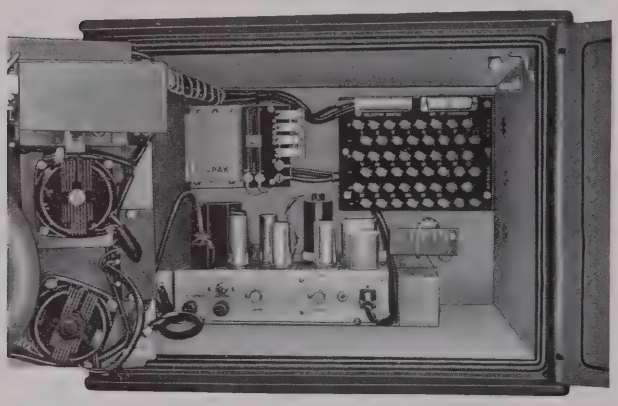

Inside of instrument with main frame swung out showing a "number of points" plug for a 12 record instrument.

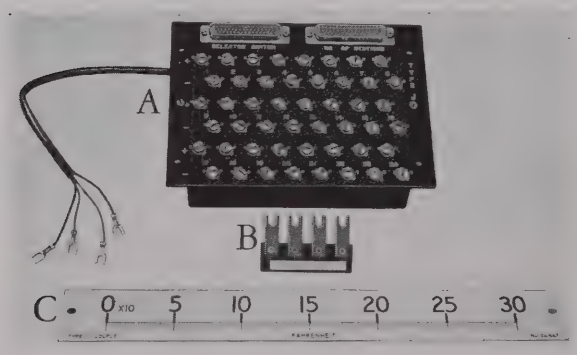

Parts necessary to change from one type of thermocouple to another
A. 24 point thermocouple board. Cold junction compensation spool is buried behind the board with the cold junctions.
B. Range Change Clip.
C. Scale Plate.

Note: To change range using the same type of thermocouple, only items B and C are necessary.

How To Order

To be sure of receiving the proper Recorder for your particular application, be sure to give the following information:

Model Number Daystrom-Weston Multiple Point Recorder.

1. Number of Points
2. Type of Printing
3. Scale
4. Calibration
5. Reference Junction Compensation, if required
6. For Use With (specify actuating device)
7. Operation, Voltage and Frequency
8. Printing Speed
9. Chart Speed
10. Special Features, such as Alarm Contacts, etc.

Note: For all input impedances above 2500 ohms give complete application details.

One Price for Any Number of Points

All the parts that are necessary to change the number of points in the Model 6702.

A. Number of Points Change Plug.
B. Print Wheel with Type and Station Indicator.

WESTON INSTRUMENTS, DIVISION OF DAYSTROM, INCORPORATED, NEWARK 12, N. J., U.S.A.

PRINTED IN U.S.A.

CIRCULAR P-11-E
AUGUST 1958

DAYSTROM-WESTON

STRIP CHART MULTIPLE POINT RECORDER

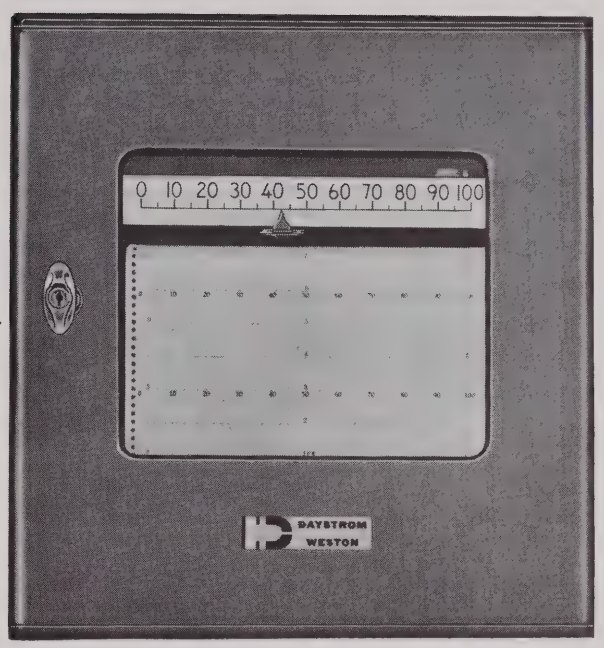

Model 6705 Potentiometer

- Dust-proof Case—only 17¾" W x 18¾" H x 15" D overall; requires small panel space.
- 10" Scale—easily read.
- Plug-in Amplifier—no solder connections.
- Exclusive Easily-Replaceable Range Standards.
- Available in 2, 10, 20, or 60-second speeds across full 10" scale.
- Universal Mounting—fits standard relay rack.
- Semi-Automatic or Fully Automatic Standardization on Potentiometer.
- Battery Eliminator for Wheatstone Bridges, if specified.

Model 6725 Wheatstone Bridge

- Interchangeable Slidewire—totally enclosed for complete protection.
- Number of Points—from 2 to 24.
- Printing Speeds—from 1 to 60 seconds per point, readily changed.
- Selector Switch—new long life etched circuit; point connected identified in window above scale; manual advance from front of instrument; extra decks can be supplied for special applications.
- Alarm Contacts—up to six additional back set SPDT switches.
- Stops Printing when Chart Mechanism is Swung Out.
- No False Record on Automatic Standardizing.

General

Models 6705-6725 are Strip Chart Multiple Point Recorders of the Weston 6700 series and can record up to twenty-four points on one instrument. Employing an electronic amplifier these instruments operate on the null balance principle.

A new long life etched circuit multiple switch, unit assemblies, and typical rugged Weston design insures trouble-free operation.

Alarm switches which are easily added, can be set in a few seconds, and are made selective by additional decks in the multiple switch. Multi- or unicolored numbered dot printing and internal fluorescent lighting (optional) are among some of the features available.

Replaceable range standards, easily changed chart speeds, and a simplified method of changing printing speed makes this recorder readily adaptable to a wide variety of applications.

Specifications

Case—Reinforced sheet steel; cast door; grey finish; dust and fume resistant.

Dimensions—17¾" W x 18¾" H x 15" D overall.

Mounting—Universal; flush, wall, or table.

Lock—In door handle.

Connection Terminals—Enclosed; conduit openings back, side, and bottom.

Accuracy—Within ±¼% of span or ±.025 mv whichever is greater on Potentiometer, and ±¼% of span or 12.5 milliohms whichever is greater on Wheatstone Bridge.

Continued on Other Side

Battery Condition Indicator—Graduated Index with red warning flag on Potentiometer; Indicating Light on Wheatstone Bridge.

Number of Points—2, 3, 4, 6, 8, 12 or 24. Models with 16, 18, or 20 points also available where some points print twice as often.

Printing—Uni-colored or multi-colored numbered dots. (Maximum 6 colors.)

Scale—10" calibrated width, with large selection of standard markings.

Calibration—Many standard ranges for Potentiometer or Wheatstone Bridge. For spans below 2 millivolts refer to the factory.

Reference Junction Compensation—Automatic on Potentiometer calibrated for use with Thermocouples.

Standardizing—Potentiometer: Fully Automatic every 45 minutes, or Semi-Automatic, as specified.
Wheatstone Bridge: None required. Battery Eliminator when specified.

Operation—A-C only, 115 volts, 60 cycles, or 115 volts, 50 cycles as specified. An external transformer is required for 220 volt operation.

Carriage Speed—To suit printing speeds.

Printing Speed—3, 5, 6, 7.5, 10, 12, 15, 20, 30 or 60 seconds, as specified. Higher speeds on application.

Chart Speeds:

Multiple—1, 2, 3, 4 or 6 inches per hour
2, 4, 6, 8 or 12 inches per hour
4, 8, 12, 16 or 24 inches per hour

Single—Speeds ranging from 24 to 960 inches per hour (20 steps).

Alarm Contacts—Provisions are made for the addition of six separate SPDT back set, individually adjusted switches. Rating 3 amperes, 115 volts a-c, non-inductive. Selective alarming also available.

Illumination—Internal fluorescent, if specified.

Actuations—Can be used to record Temperature (thermocouple, resistance bulb or Radiation Pyrometer), Pressure, Flow, pH, Conductivity, Speed, Volts, Amps, Watts, Millivolts, Milliamps, Turbidity, Strain, Weight and any other variable where the measuring transducer supplies a millivolt or milliamp signal.

How To Order

To be sure of receiving the proper Recorder for your particular application, be sure to give the following information:

Model Number Weston Multiple Point Recorder.

A. Number of Points
B. Type of Printing
C. Scale
D. Calibration
E. Reference Junction Compensation, if required
F. For Use With (specify actuating device)
G. Standardization
H. Operation, Voltage and Frequency
I. Carriage Speed
J. Printing Speed
K. Chart Speed
L. Special features, such as Alarm Contacts, etc.

Note: For all input impedances above 2500 ohms give complete application details.

Prices Available Upon Application

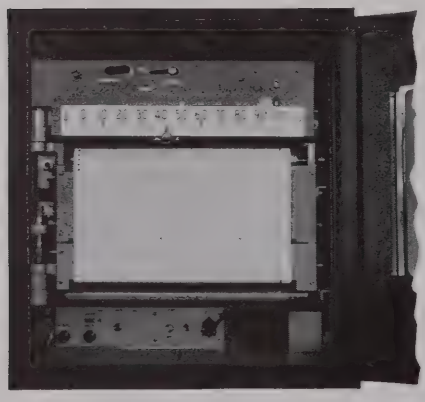

Front View, Door Open Showing Manual Point-Selector Switch at Upper Left.

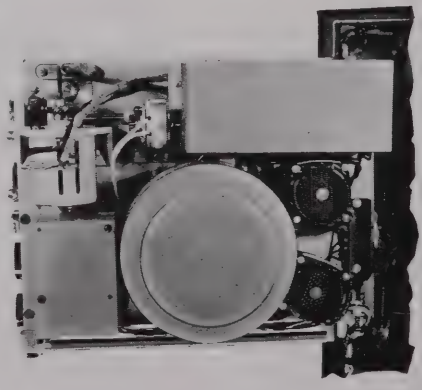

Rear View of Main Frame.

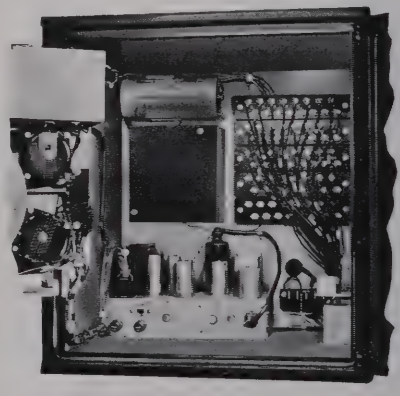

Main Frame Swung Out to Show Amplifier and Terminal Board.

WESTON INSTRUMENTS, DIVISION OF DAYSTROM, INCORPORATED, NEWARK 12, N. J., U. S. A.

PRINTED IN U.S.A.

DAYSTROM-WESTON

SINGLE OR MULTIPLE POINT SELF-BALANCING INDICATOR

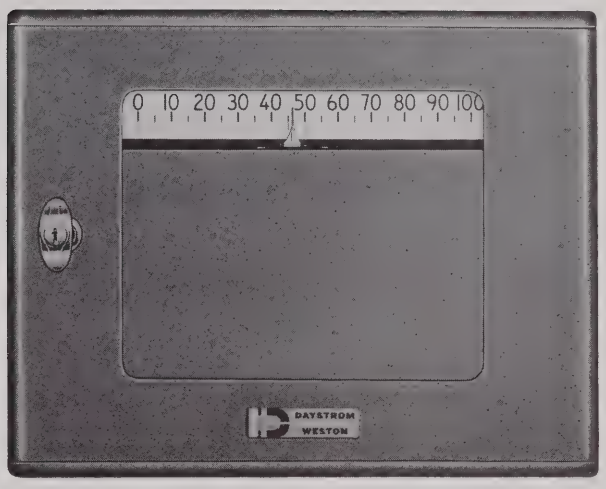

Model 6771
Wheatstone Bridge

Model 6751 Potentiometer Model 6771 Wheatstone Bridge

- Dust-Resistant Case—only 17¾" W x 13½" H x 15" D; requires small panel space.
- 10" scale—easily read.
- Special Pointer—eliminates parallax.
- Plug-in Amplifier—no solder connections.
- Exclusive easily - replaceable Range Standards.
- Universal Mounting.
- Available in 1, 2, 10, 20 or 60-second speeds across full 10" scale.
- D-PAK Constant Voltage Supply Unit eliminates batteries, standard cell, and standardizing mechanism in potentiometer.
- Long Universal Slide Wire—protected from dirty atmosphere and mechanical damage.

General

The Weston Model 6751-6771 Self-Balancing Indicator is a companion to the Model 6701-6721 Recorder. These null balance instruments employ a line-driven synchronous converter and an electronic amplifier to control a two-phase motor, thus re-balancing the measuring circuit.

Like the 6701 Recorder, these rugged instruments give long-life performance. At the same time these Indicators have the advantage of easy range-changing by means of replaceable range standards.

Potentiometer models can be supplied with built-in switches for 48 points.

Specifications

Case—Reinforced sheet steel; cast door; grey finish. Dust and fume resistant.

Dimensions—17¾" W x 13½" H x 15" D.

Lock—In door handle.

Connection Terminals—Enclosed, conduit openings, back, side, and bottom.

Accuracy—Within ±¼% of span or ±.025 mv whichever is greater on Potentiometer, and ±¼% of span or ±12.5 milliohms whichever is greater on Wheatstone Bridge.

Carriage Speed—Approximately 1, 2, 10, 20 or 60 seconds, as specified. Standard is 20 seconds.

Number of Points—Type 1, one; Type 2, to 24; Type 3, to 48

Mounting—Universal; flush, wall, or table.

Scale—10" calibrated width, with large selection of standard markings.

Calibration—Many standard ranges for Potentiometer or Wheatstone Bridge. For spans below 2 millivolts and ranges not listed in Circular P-7, refer to the factory.

Reference Junction Compensation—Automatic on Potentiometers calibrated for use with thermocouples.

Operation—A-C only, 115 volts, 60 cycles, or 115 volts, 50 cycles as specified. An external transformer is required for 220-volt operation.

Alarm Contacts—Provisions are made for the addition of six separate SPDT back set, individually adjusted switches. Rating 3 amperes, 115 volts a-c, non-inductive.

Continued on Other Side

How to Order

To be sure of receiving the proper Indicator for your particular application, be sure to give the following necessary information:

1. Model Number
2. Number of Points
3. Scale
4. Calibration
5. Reference Junction Compensation, if required
6. For Use with (specify actuating device)
7. Operation, Voltage and Frequency
8. Carriage Speed
9. Special Features, such as Alarm Contacts, etc.
10. Circuit Details including input resistance if above 5000 ohms.

Prices Available Upon Application

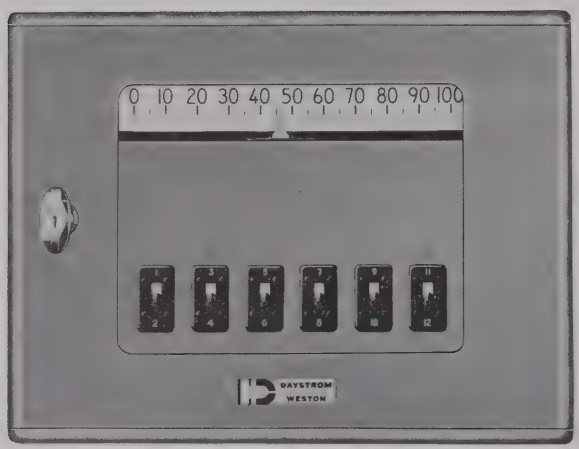

Model 6751 Type 2 Multiple Point with toggle switches for 12 points.

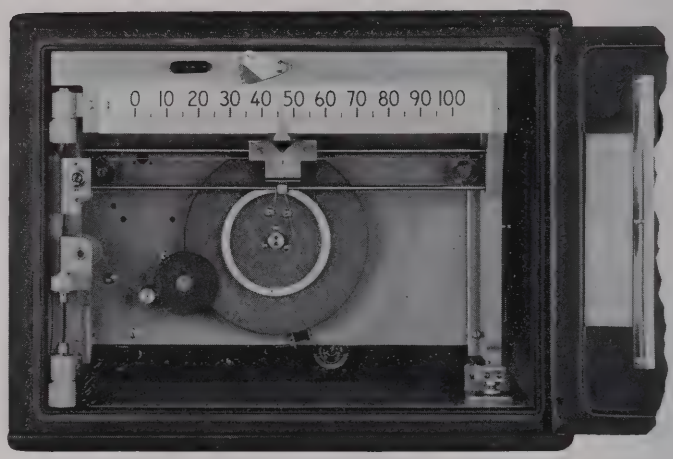

Internal View of Model 6751 Potentiometer Type.

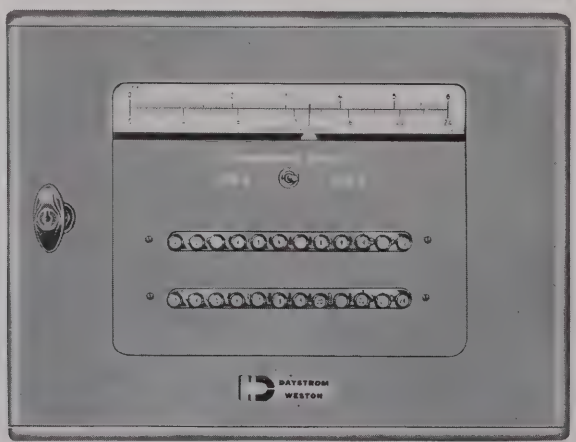

Model 6751 Type 3 Multiple Point with pushbuttons for 24 points.

WESTON INSTRUMENTS, DIVISION OF DAYSTROM, INCORPORATED, NEWARK 12, N. J., U.S.A.

PRINTED IN U.S.A.

DAYSTROM-WESTON

PRODUCT RECORDER

Model 6717

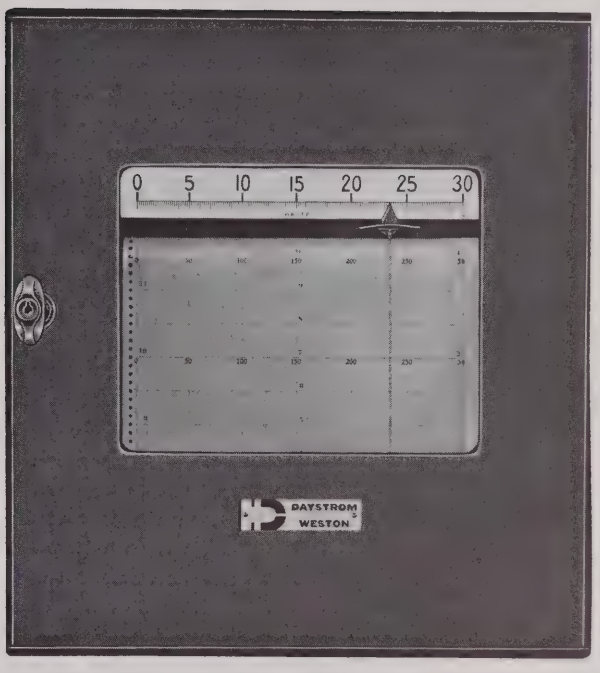

Features

- Dust-resistant case.
- 10″ scale—easily read.
- Plug-in Amplifiers—no solder connections.
- Exclusive Easily-Replaceable Range Standards.
- Replaceable Stylus on Pen.
- Fast 2 second carriage speed across full scale.
- Interchangeable Slidewire—totally enclosed for complete protection.
- Universal Mounting—fits standard relay rack.
- D-PAK Constant Voltage Supply Unit eliminates batteries, standard cell, and standardizing mechanism.

General

The Daystrom-Weston Model 6717 Product Recorder is actually two independent measuring systems housed within a single case. It employs two electronic amplifiers with the instrument operating on a null balance principle. Two independent millivolt signals are connected to the individual inputs. These signals are multiplied by the internal circuitry and the product is recorded. The multiplying function is accomplished through use of a retransmitting slidewire on one measuring circuit wired to the input of the second measuring circuit.

This unit is ideally suited for a single case watt or kilowatt recorder. It can also be used for multiple measurements such as weight times speed and flow times density, etc. Two second full scale pen speed is standard.

The instrument contains two completely separate measuring circuits permitting use of replaceable range standards for quick range change on either or both circuits.

Alarm switches are available for each measuring circuit which can be set in a matter of seconds. Quickly changed chart speeds help make this a most versatile instrument.

Specifications

Case—Reinforced sheet steel; cast door; grey finish; dust and fume resistant.

Dimensions—17¾″ W x 18¾″ H x 15″ D overall.

Mounting—Universal (flush, wall or table).

Lock—in door handle.

Connection Terminals—Enclosed; conduit openings back, side, and bottom.

Continued on Other Side

Scale—10″ calibrated width, with large selection of standard markings.

Calibration—Many standard ranges. For spans below 2 millivolts refer to the factory.

Carriage Speed—2 seconds full scale.

Chart Speeds—1″ per hour to ½″ per minute continuous, is standard. Higher chart speeds available with special motor.

Operation—A-C only, 115 volts, 60 cycles, or 115 volts, 50 cycles as specified. An external transformer is required for 220 volt operation.

Alarm Contacts—Each circuit has provision for the addition of six separate SPDT back set, individually adjusted switches. Rating 3 amperes, 115 volts a-c non-conductive.

Shipping Weight—Approx. 117 lbs.

How To Order

Please provide the following information so that you will be sure to receive the proper Recorder for your particular application:

1. Model Number
2. Actuation—specify voltage or current magnitude and source impedance for each input variable.
3. Calibration
4. Chart Speed
5. Scale
6. Chart
7. Operation, Voltage and Frequency
8. Optional Features, such as Alarm Contacts, etc.

Prices Available Upon Application

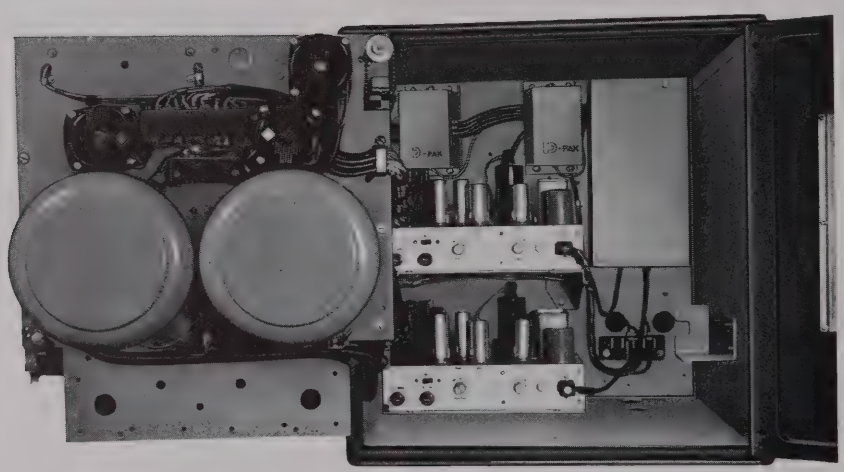

Main Frame Swung Out Showing Dual System.

WESTON INSTRUMENTS, DIVISION OF DAYSTROM, INCORPORATED, NEWARK 12, N. J., U.S.A.

PRINTED IN U.S.A.

DAYSTROM-WESTON

PEAK PICKING RECORDER

Model 6707

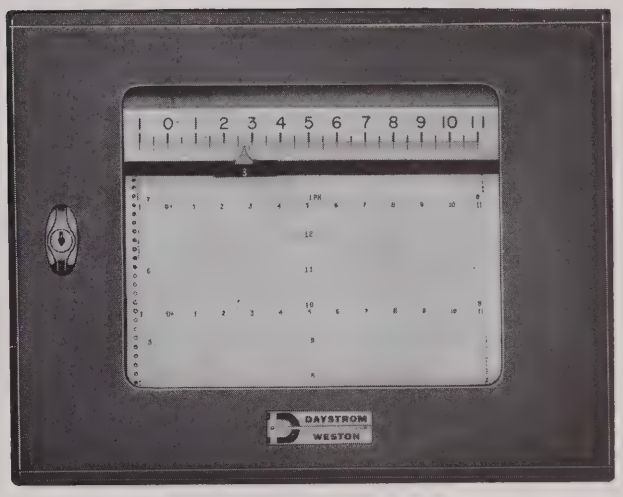

- Dust-resistant Case—only 17¾″ W x 13½″ H x 15″ D overall; requires small panel space.
- 10″ Scale—easily read.
- Plug-in Amplifier—no solder connections.
- Exclusive Easily-Replaceable Range Standards.
- Available in 2, 10, or 20-second speeds across full 10″ scale.
- Electronic Peak Picking Detector.
- Universal Mounting—fits standard radio rack.
- D-PAK Constant Voltage Supply Unit eliminates batteries, standard cell, and standardizing mechanism.
- Interchangeable Slidewire—totally enclosed for complete protection.
- Optional Features—Chart tear-off . . . Alarm contacts (maximum of six) . . . Printing interlocks to prevent loss of sequence . . . Electric transmission signal of one or all peaks . . . Pen dragger for single record operation . . . and others.

General

Daystrom-Weston Model 6707 Peak Picking Recorder is specifically designed for process gas chromatography applications. It can be used for any other measurements where peak height is important. In gas chromatographic meaurements peak height of the individual components of a gas stream is a direct indication of the concentration of those components in the stream. A single point strip chart recorder used in such analysis produces individual curves from a common vertical base line for each component. A fast chart speed must be used to make these curves readable, so that two or three feet of strip chart may be required to log all components of a single sample. Since only a small portion of this record is visible at any one time, the operator has difficulty recognizing trends from one sample to the next in continuous process operations.

By contrast, the D-W Model 6707 records only peak heights, printing them as successively numbered points on a slowly moving chart. Because of the slow chart speed, many hours of stream analysis are available for study at any given time in the recorder window.

The recorder has one set of input terminals and a multipoint printing head. Each impulse from the actuating device drives the pointer upscale, with no printing taking place. As soon as the peak of the impulse signal is reached an electronic detector causes the recorder to print and advances the printing head to the next number.

Special features are available for safeguarding against false or secondary peaks, providing for disappearing components, and periodically synchronizing the peak picker with the chromatograph.

Electric transmission signals of any or all points can be obtained. These signals can be used to transmit to data loggers, computers or a control system. A combination of the Daystrom-Weston Model 6707 Peak Picker and Model 6135 Non-Indicating Controller* with Electric Proportioning Control is available for putting all components of a gas stream on control.

*Request Circular 08-501 for complete specifications.

Specifications

Case—Reinforced sheet steel; cast door; grey finish; dust and fume resistant.

Dimensions—17¾″ W x 13½″ H x 15″ D overall.

Mounting—Universal; flush, wall or table.

Connection Terminals—Enclosed; conduit openings back, side, and bottom.

Lock—In door handle.

Continued on Other Side

Number of Points—2, 3, 4, 6, 8, 12.

Scale—10″ calibrated width, with large selection of standard markings.

Calibration—Many standard ranges.

Measuring Circuit Voltage Supply—D-PAK Constant Voltage Supply Unit is standard. No dry cell, standard cell or standardizing required.

Operation—A-C only, 115 volts, 60 cycles, or 115 volts, 50 cycles as specified. An external transformer is required for 220 volt operation.

Carriage Speed—Approximately 2, 10 or 20 seconds, as specified. Standard is 2 seconds.

Chart Speeds:

Multiple—1, 2, 3, 4 and 6 inches per hour
2, 4, 6, 8 and 12 inches per hour
4, 8, 12, 16 and 24 inches per hour

Single—Speeds ranging from 24 to 960 inches per hour (20 steps).

Optional Features:

Alarm Contacts—Provisions are made for the addition of six separate SPDT back set, individually adjusted switches. Rating 3 amperes, 115 volts a-c, non-inductive.

Pen Dragger—Permits mounting of single pen on printing head for continuous recording alternating with multi-number printing at operator's discretion.

Time Operation Pen—Separate event marker, for recording one or two inputs on right hand edge of chart.

Approximate Weight—91 lbs.

How To Order

To be sure of receiving the proper Recorder for your particular application, be sure to give the following information:

1. Model Number
2. Actuation
3. Carriage Speed
4. Chart Speed
5. Scale
6. Chart
7. Operation Voltage and Frequency
8. Optional Features, such as Alarm Contacts, etc.

Prices Available Upon Application

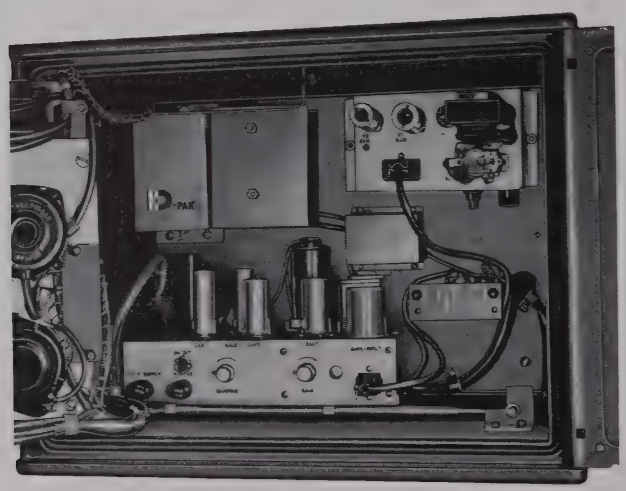

Internal View

WESTON INSTRUMENTS, DIVISION OF DAYSTROM, INCORPORATED, NEWARK 12, N. J., U.S.A.

PRINTED IN U.S.A.

DAYSTROM-WESTON

ADJUSTABLE SPAN-ADJUSTABLE ZERO RECORDER

Model 6701

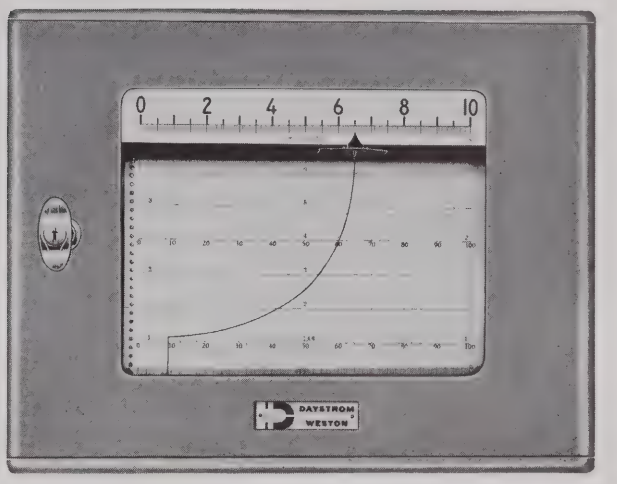

- Dust-resistant case—only 17¾″ W x 13½″ H x 15″ D overall; requires small panel space.
- 10″ Scale—easily read.
- Plug-in Amplifier—no solder connections.
- Exclusive easily-replaceable Range Standards.
- Available in 1, 2, 10 or 20-second speeds across full 10″ scale.
- Span Adjustment—From 20% of nominal span to 200% of nominal span. Minimum span 1 mv.
- Zero Adjustment — Any span selected may be shifted (without change) over a maximum of ±50 mv.
- Universal Mounting—fits standard relay rack.
- D-PAK Constant Voltage Supply Unit eliminates batteries, standard cell, and standardizing mechanism.
- Interchangeable Slidewire—totally enclosed for complete protection.
- Optional Features—Chart Tear-off. Alarm Contacts (maximum of six), and others.

General

Daystrom-Weston Model 6701 Adjustable Span-Adjustable Zero Recorders are of the null-balancing type. They employ a line driven synchronous converter and amplifier to control a two-phase motor which rebalances the measuring circuit.

The millivolt input, either direct or from a transducer, is converted into a visual indication and a permanent chart record.

A calibrated dial indicates setting of span adjustment in millivolts; however, for precise calibration, a portable potentiometer should be used in making adjustment. Since the recorder is limited to spans between 1 and 250 mv, the lowest *nominal* span is 5 mv (1-10) and highest *nominal* span is 125 mv (25-250). The zero adjustment is marked in arbitrary units from 0-1000. This adjustment should be selected from the following standard values: ±1, ±5, ±10, ±25, ±50 mv.

These instruments are ruggedly constructed for long life, trouble-free service and are practically immune to vibration and shock. A plug-in amplifier, easy replaceable range standards, interchangeable slide wires and quickly changed chart speeds make these instruments adaptable to a wide variety of applications.

The plug-in amplifier is readily removed for replacement or service and the tubes are available at any radio supply store.

A pen that never pumps or siphons-off, requires no priming, does not tear charts even at low speeds and automatically lifts when chart frame opens . . . are additional features.

Specifications

Case—Reinforced sheet steel; cast door; grey finish; dust and fume resistant.

Dimensions—17¾″ W x 13½″ H x 15″ D overall.

Mounting—Universal; flush, wall or table.

Lock—In door handle.

Connection Terminals—Enclosed; conduit openings back, side, and bottom.

Number of Points—One.

Continued on Other Side

Scale—10″ calibrated width, with large selection of standard markings.

Calibration—Many standard ranges for Potentiometer.

Measuring Circuit Voltage Supply—D-PAK constant voltage supply unit standard. No dry cell, standard cell, or standardizing required.

Operation—A-C only, 115 volts, 60 cycles, or 115 volts, 50 cycles as specified. An external transformer is required for 220 volt operation.

Carriage Speed—Approximately 1, 2, 10 or 20 seconds, as specified. Standard is 2 seconds.

Chart Speeds:

Multiple—1, 2, 3, 4 or 6 inches per hour
2, 4, 6, 8 or 12 inches per hour
4, 8, 12, 16 or 24 inches per hour

Single—Speeds ranging from 24 to 960 inches per hour (20 steps).

Actuations—Pressure, weight or accelerometer load cells; flow, gas chromatography and many others.

Optional Features:

Alarm Contacts—Provisions are made for the addition of six separate SPDT back set, individually adjusted switches. Rating 3 amperes, 115 volts a-c, non-inductive.

Time Operation Pen—Separate event marker for recording one or two inputs on right hand edge of chart.

How To Order

To be sure of receiving the proper Recorder Controller for your particular application, be sure to give the following information:

1. Model Number
2. Actuation
3. Carriage Speed
4. Chart Speed
5. Scale
6. Chart
7. Calibration
8. Operation, Voltage and Frequency
9. Optional Features, such as Alarm Contacts, etc.

Prices Available Upon Application

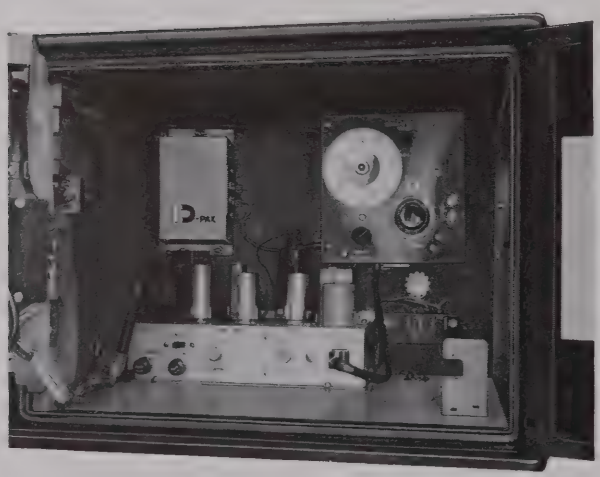

Front View, Door Opened.

Plug-in Amplifier.

WESTON INSTRUMENTS, DIVISION OF DAYSTROM, INCORPORATED, NEWARK 12, N. J., U.S.A.

PRINTED IN U.S.A.

DAYSTROM-WESTON

CIRCULAR CHART RECORDER with ELECTRIC CONTROL

●

CONTACT and PROPORTIONAL TYPE ELECTRIC CONTROL

Model 6833 Potentiometer

- Dust-proof Case—requires small panel space.
- Neutral Gray Finish—blends well with any color.
- 12-inch Chart; full scale Pen Travel of 4⅝ inches.
- Scale—33.86" long; concentric 320°; larger, easily read numerals; Scale rigidly supported on back plate assembly—permits calibration or indicator reading with door open.
- Indicator Pointer driven from behind scale plate; pointer does not obscure chart; facilitates chart replacement.
- Control Index on scale for maximum resolution and distant reading.
- Control Index setting location inside door discourages tampering; external index setting knob available.
- Plug-in Amplifier—no solder connections.

Model 6853 Wheatstone Bridge

- Full Scale response times of 5, 10 and 20 seconds.
- Universal Mounting—fits standard relay rack.
- Easily Replaceable Range Standards—no solder connections.
- D-PAK Constant Voltage Supply Unit eliminates batteries, standard cell, and standardizing mechanism in Potentiometer.
- Battery Eliminator supplied in Wheatstone Bridge.
- Flush Latch Handle—lock recessed in door.
- Available in contact type two-position (On-Off) or three-position control, and proportioning control with 5, 10 or 20% proportional band.
- Control Mechanism totally enclosed. Normal zone of 3-position control adjustable to any desired width.
- Optional Features—alarm contacts (maximum of six); Fail Safe feature.

General

Daystrom-Weston Models 6833 and 6853 employ an electronic amplifier operating on the null balance principle. The control mechanism, of unusual new design, eliminates chatter due to vibration with even the narrowest differential and being completely enclosed insures long trouble-free performance under adverse atmospheric conditions. The control mechanism is directly coupled to the slidewire shaft, eliminating lag and back lash inherently associated with linkage, cams, etc., thereby maintaining close process control. Readily added alarm switches are easily set in a matter of seconds.

A Fail Safe feature is provided which offers system protection for failure of vacuum tubes, chopper, external thermocouple and other components without zero shift. This Fail Safe feature should be specified to drive the carriage either up-scale or down-scale.

Specifications

Case—reinforced sheet steel; cast door; gray finish; dust and fume resistant.

Dimensions—17¾" w x 18¾" h x 15" d

Mounting—universal; flush, wall or table.

Lock—recessed in door casting.

Connection Terminals—enclosed; conduit openings, back, side and bottom.

Scale—concentric 320°; 33.86" long.

Continued on Other Side

Accuracy—*Potentiometer:* ±¼% of span or ±.025 mv, whichever is greater. *Wheatstone Bridge:* ±¼% of span or ±½F, whichever is greater.

Chart—12-inch diameter; full scale pen travel 4⅝ inches.

Calibration—many standard ranges for Potentiometer or Wheatstone Bridge. For spans below 2 millivolts, refer to Factory

Reference Junction Compensation—automatic on Potentiometer calibrated for use with thermocouples.
Number of Pens—one.

Measuring Circuit Voltage Supply—no dry cell, standard cell, or standardizing required. D-PAK Constant Voltage Supply Unit standard on Potentiometer. Battery Eliminator standard on Wheatstone Bridge.

Chart Speed—standard Chart speeds are 7 days, 48, 24, 12, 8, 5, or 1 hour per revolution.

Full Scale Response Time—5, 10, and 20 seconds for 60 cycle operation.
6, 12, and 24 seconds for 50 cycle operation.

Operation—a-c only, 115 volts, 60 cycles or 115 volts, 50 cycles as specified. An external transformer is required for 220 volt operation.

Control Contact Type—2 or 3 position as specified. Control contacts rated 6 amperes at 115 volts a-c, 3 amperes 220 volts a-c, non-inductive. External Index Setting knob can be provided.

Proportional Type—100 ohm slide wire for 5, 10 or 20% proportional band. Adjustable over full scale of instrument. For use with motors with self contained relay and 100 ohm slide wire, or with external relays for adjustable proportional band. Reset and approach rate settings. They are also available with 100% slide wire for use with external relays for proportional band settings up to 200% and for time modulation control.

Optional Features—alarm contacts—provisions are made for the addition of six SPDT back set, individually adjusted switches. Rating 3 amperes, 115 volts a-c, non-inductive. Fail Safe feature—up-scale or down-scale as specified.

How To Order

1. Model
2. Range
3. Scale
4. Chart
5. Calibration
6. For Use With (specify actuating device)
7. Operation, Voltage and Frequency
8. Pen Speed
9. Chart Speed
10. Type of Control
11. Special Features, such as Alarm Contacts, etc.
12. Specify direction of travel for Fail Safe feature

Prices Available Upon Application

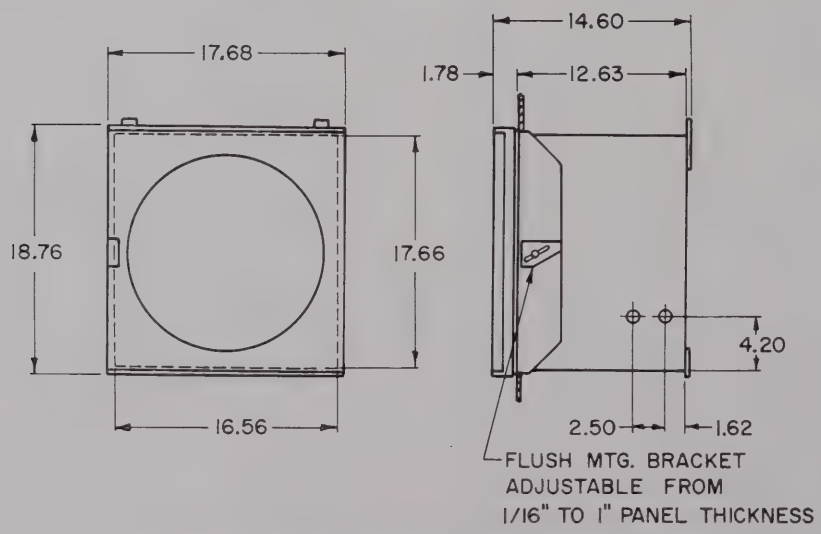

Approximate dimensions. Certified drawings available on request.

WESTON INSTRUMENTS, DIVISION OF DAYSTROM, INCORPORATED, NEWARK 12, N. J., U.S.A.

PRINTED IN U.S.A.

DAYSTROM-WESTON

CIRCULAR CHART RECORDER with PNEUMATIC CONTROL

Model 6836 Potentiometer

- Dust-Resistant Case—requires small panel space.
- Neutral Gray Finish—blends well with any color.
- 12-inch Chart; full scale Pen travel of 4⅝ inches.
- Scale 33.86" long; concentric 320°; larger, easily read numerals; Scale rigidly supported on back plate assembly—permits calibration or indicator reading with door open.
- Indicator Pointer driven from behind scale plate; pointer does not obscure chart; facilitates chart replacement.
- Control Index on scale for maximum resolution and distant reading.
- Control Index Setting knob location inside door discourages tampering; external index setting knob available.
- Plug-in Amplifier—no solder connections.
- Easily Replaceable Range Standards—no solder connections.

Model 6856 Wheatstone Bridge

- Full Scale Response Times of 5, 10 and 20 seconds.
- Universal Mounting—fits standard relay rack.
- D-PAK Constant Voltage Supply Unit eliminates batteries, standard cell, and standardizing mechanism in potentiometer.
- Pneumatic Control available as:
  1. Universal Controller: 2-50% Proportional Band, On-Off, and 2-100% differential Gap, Manual Reset.
  2. Proportional (2-300%) plus Automatic Reset.
  3. Proportional (2-300%) plus Automatic Reset plus Derivative.
- Battery Eliminator supplied in Wheatstone Bridge.
- Flush Latch Handle—lock recessed in door.
- Optional Features—alarm contact (maximum of six); 4-position pneumatic transfer switch.

General

Daystrom-Weston Models 6836 and 6856 Circular Chart Recorder Controllers are of the null-balancing type. They employ a line driven synchronous converter and amplifier to control a two-phase motor and unbalance the measuring circuit.

These instruments are ruggedly constructed for long life, trouble-free service and are practically immune to vibration and shock. A plug-in amplifier, easy replaceable range standards, interchangeable slide wires and a wide selection of chart speeds make these instruments adaptable to a wide variety of applications.

Universal Controller—The controller can be applied to the majority of processes since it can be used as a proportional controller (2 to 50% PB), an "On-Off" controller, or a differential gap controller (2 to 100% DG). Settings are easily made by rotating the dial on the front of the control unit. Manual reset is also provided by adjusting the knob at the top of the control unit.

Proportional Controller with Reset or Reset and Derivative—This group of controllers is recommended for the more complex processes with capacity or where appreciable transfer lag and/or dead-time is present. These processes require wide proportional control response coupled with automatic reset and/or derivative response. Proportional band adjustability for this group of controllers is 2

Continued on Other Side

to 300%. Automatic reset or derivative is achieved by the addition of reset or derivative valves to the basic proportional controller. Reset and derivative valves are adjustable from 0.02 to 5 minutes.

The 4-Position Transfer Station—The design of this station provides complete control loop flexibility. The piping of the "flip-switch" provides true bumpless transfer since gage accuracy is not a governing factor. In the TEST position a complete open-loop controller alignment and performance check can be made with simultaneous manual control.

The plug-in amplifier is readily removed for replacement or service and the tubes are available at any radio supply store.

Specifications

Case—reinforced sheet steel; cast door; gray finish; dust and fume resistant.

Dimensions—16¾" w x 18¾" h x 15" d

Mounting—universal; flush, wall or table.

Lock—recessed in door casting.

Connection Terminals—enclosed; conduit openings, back, side and bottom.

Accuracy—Within ±¼% of span or ±.025 mv whichever is greater on Potentiometer, and ±¼% of span or ±12.5 milliohms whichever is greater on Wheatstone Bridge.

Chart—12" diameter; full scale Pen Travel 4⅝".

Scale—Concentric 320°; 33.86" long.

Calibration—Many standard ranges for Potentiometer or Wheatstone Bridge. For spans below 2 millivolts, refer to Factory.

Reference Junction Compensation—automatic or Potentiometer calibrated for use with thermocouples.

Number of Pens—one.

Measuring Circuit Voltage Supply—no dry cell, standard cell, or standardizing required. D-PAK Constant Voltage Supply Unit standard on Potentiometer. Battery Eliminator standard on Wheatstone Bridge.

Operation—a-c only, 115 volts, 60 cycles or 115 volts, 50 cycles as specified. An external transformer is required for 220 volt operation.

Full Scale Response Time—5, 10, and 20 seconds for 60 cycle operation.
6, 12, and 24 seconds for 50 cycle operation.

Chart Speed—Standard chart speeds are 7 days, 48, 24, 12, 8, 4 or 1 hour per revolution.

Supply Air—20 p.s.i.g.

Controlled Air—3-15 p.s.i.g.

Optional Features—alarm contacts—provisions are made for the addition of six SPDT back set, individually adjusted switches. Rating 3 amperes, 115 volts, a-c, non-inductive; 4-position transfer station with internal regulator. Positions are manual, automatic, test, and service.

Fail Safe Feature—up-scale or down-scale as specified.

How To Order

1. Model Number
2. Range
3. Scale
4. Chart
5. Calibration
6. For Use with (specify actuating device)
7. Operation, Voltage and Frequency
8. Pen Speed
9. Chart Speed
10. Type of Control
11. Special Features, such as Alarm Contacts, etc.
12. Specify direction of travel for Fail Safe feature

Prices Available Upon Application

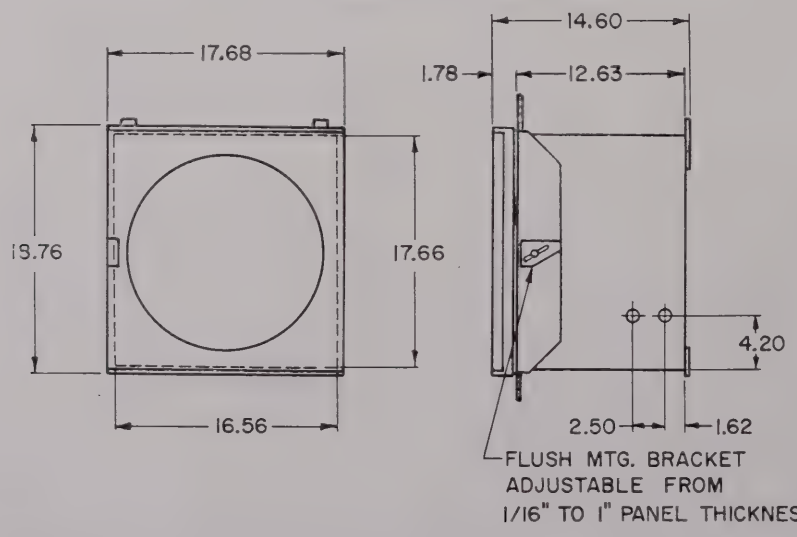

Approximate dimensions. Certified drawings available on request.

WESTON INSTRUMENTS, DIVISION OF DAYSTROM, INCORPORATED, NEWARK 12, N. J., U.S.A.

PRINTED IN U.S.A.

CIRCULAR P-12-C
JUNE 1958

DAYSTROM-WESTON

RECORDING CONTROLLER

ELECTRIC CONTACT TYPE

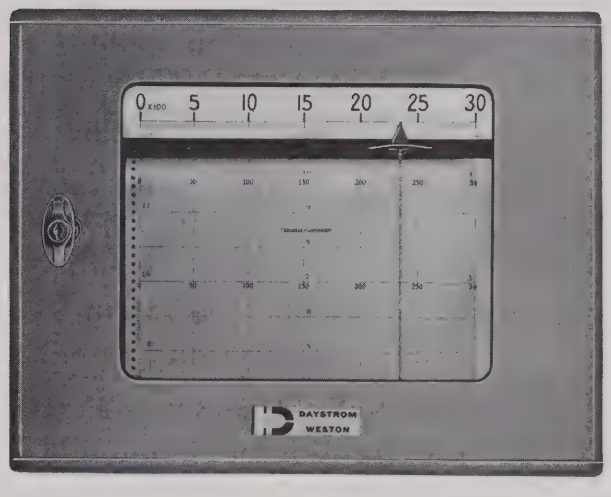

Model 6731 Potentiometer ***Model 6741 Wheatstone Bridge***

- Dust-proof Case—only 17¾" W x 13½" H x 15" D; requires small panel space.
- 10" Scale—easily read.
- Plug-in Amplifier—no solder connections.
- Exclusive Easily-Replaceable Range Standards.
- Available in 2, 10, 20, or 60-second speeds across full 10" scale.
- Universal Mounting—fits standard radio rack.
- Semi-Automatic or Fully Automatic Standardization on Potentiometer.
- Fail Safe Feature.
- Battery Eliminator for Wheatstone Bridges, if specified.
- Interchangeable Slidewire—totally enclosed for complete protection.
- Available in two position (On-Off) or three position control. External index setting knob can be provided. Can be supplied with up to six additional SPDT back set switches.
- Control Switching—totally enclosed. Normal zone of 3-position control adjustable to any desired width.

General

The Weston Models 6731-6741, two or three position Recorder Controllers, are part of the 6700 series of the Weston line. Employing an electronic amplifier these instruments operate on the null balance principle.

The control mechanism, of unusual new design, eliminates chatter due to vibration with even the narrowest differential and being completely enclosed insures long trouble-free performance under adverse atmospheric conditions. The control switch is directly coupled to the slidewire shaft, eliminating lags and back lash inherently associated with linkages, cams, etc., thereby maintaining close process control. Readily added alarm switches are easily set in a matter of seconds.

Replaceable range standards and quickly changed chart speeds make these instruments adaptable to a wide variety of applications.

A fail safe feature is provided which offers system protection for failure of vacuum tubes, chopper, external thermocouple and other components without zero shift. This fail safe feature should be specified to drive the carriage either upscale or downscale.

Specifications

Case—Reinforced sheet steel; cast door; black finish; dust and fume resistant.

Dimensions—17¾" W x 13½" H x 15" D.

Mounting—Universal; flush, wall or table.

Lock—In door handle.

Connection Terminals—Enclosed; conduit openings back, side, and bottom.

Accuracy—Within ±¼% of span or ±.025 mv whichever is greater on Potentiometer, and ±¼% of span or ±½°F whichever is greater on Wheatstone Bridge.

Battery Condition Indicator—Graduated Index with red warning flag on Potentiometer. Indicating Light on Wheatstone Bridge.

Number of Points—One.

Scale—10" calibrated width, with large selection of standard markings.

Continued on Other Side

Calibration—Many standard ranges for Potentiometer or Wheatstone Bridge. For spans and ranges not listed refer to the factory.

Reference Junction Compensation—Automatic on Potentiometer calibrated for use with Thermocouples.

Standardizing—Potentiometer: Fully Automatic every 45 minutes, or Semi-Automatic, as specified. Wheatstone Bridge: None required. Battery Eliminator when specified.

Operation—A-C only, 115 volts, 60 cycles, or 115 volts, 50 cycles as specified. An external transformer is required for 220 volt operation.

Type of Control—2 or 3 position, as specified. Control contacts rated 6 amperes at 115 volts a-c, 3 amperes 220 volts a-c, non-inductive. Front set control index standard. External index setting knob can be provided.

Carriage Speed—Approximately 2, 10, 20 or 60 seconds, as specified. Standard is 20 seconds.

Chart Speeds:

Multiple—1, 2, 3, 4 or 6 inches per hour
2, 4, 6, 8 or 12 inches per hour
4, 8, 12, 16 or 24 inches per hour

Single—Speeds ranging from 24 to 960 inches per hour (20 steps).

Alarm Contacts—Provisions are made for the addition of six separate SPDT back set, individually adjusted switches. Rating 3 amperes, 115 volts a-c, non-inductive.

Actuations—Temperature, Pressure, Flow, Speed, pH, Conductivity, Humidity, Gas Chromatography, Volts, Amps, Watts, Millivolts, Milliamps, Speed Ratio and many others.

How To Order

To be sure of receiving the proper Recorder Controller for your particular application, be sure to give the following information:

Model Number of Weston Recorder Controller.

A. Number of Points
B. Scale
C. Calibration
D. Reference Junction Compensation, if required
E. For Use With (specify actuating device)
F. Standardization
G. Operation, Voltage and Frequency
H. Carriage Speed
I. Chart Speed
J. Type of Control
K. Special Features, such as Alarm Contacts, etc.
L. Specify direction of travel for fail safe Feature.

Prices Available Upon Application

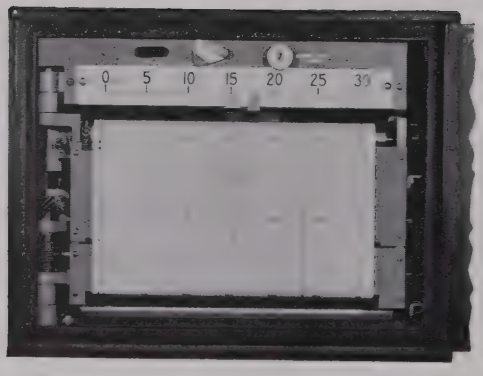

Front View, Door Opened to Show Control Point Setter and Control Index.

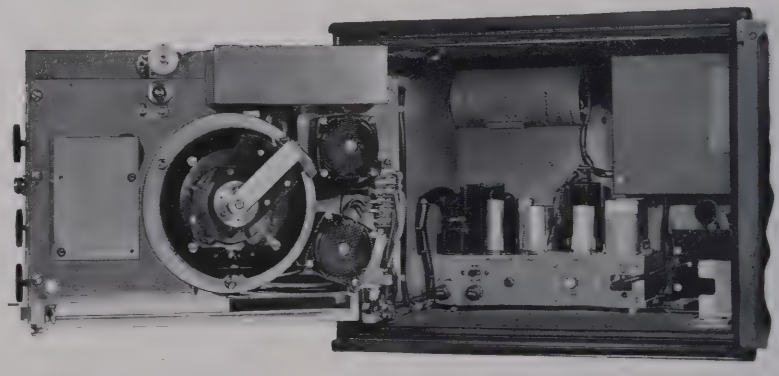

Internal View of Control Mechanism Showing Alarm Contact Housing at Left.

WESTON INSTRUMENTS, DIVISION OF DAYSTROM, INCORPORATED, NEWARK 12, N. J., U.S.A.

PRINTED IN U.S.A.

DAYSTROM-WESTON

PROPORTIONAL ELECTRIC RECORDING CONTROLLER

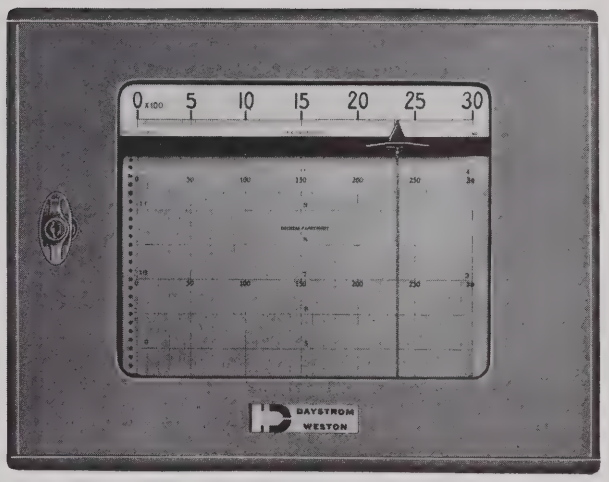

POSITION AND TIME MODULATION TYPES USING EXTERNAL RELAY DETECTOR

Model 6731 Type 2 Potentiometer ***Model 6741 Type 2 Wheatstone Bridge***

- Dust-resistant Case—only 17¾" W x 13½" H x 15" D; requires small panel space.
- 10" Scale—easily read.
- Plug-in Amplifier—no solder connections.
- Exclusive Easily-Replaceable Range Standards.
- Available in 2, 10, 20, or 60-second speeds across full 10" scale.
- Universal Mounting—fits standard relay rack.
- Semi-Automatic or Fully Automatic Standardization on Potentiometer.
- Battery Eliminator for Wheatstone Bridges, if specified.
- Interchangeable Slidewire—totally enclosed for complete protection.
- Sensitive Electronic Detectors.
- Control Slidewire—covers 100% of range.
- Position Modulation Control—Manual or automatic reset. Throttling zones up to 200% of range.
- Time Modulation Control—Automatic reset. Throttling zone adjustable up to 75% of range. Pulse cycle adjustable from 10 to 180 seconds. Rate of approach available.
- External index setting knob can be provided.
- Alarm Contacts—up to six additional back set SPDT switches.

General

The Daystrom-Weston Models 6731-6741 Type 2 Throttling Recorder Controllers are part of the 6700 series of the Daystrom-Weston line. Employing an electronic amplifier, these instruments operate on the null balance principle.

Mounted in the slidewire compartment is an additional control slidewire whose length is equivalent to 100% of the range. The control point is set by means of a rheostat connected in a bridge circuit with the control slidewire.

In the valve motor operator there is also mounted a slidewire connected in a bridge circuit with necessary resistors in the sensitive electronic detector. The difference in output of these two bridges is fed into the detector which causes the valve operator motor to run in such a direction so as to rebalance the two bridges. In the time modulating system the entire mechanism is built into the detector.

Readily added alarm switches are easily set in a matter of seconds. Replaceable range standards and quickly changed chart speeds make these instruments adaptable to a wide variety of applications.

Specifications

Case—Reinforced sheet steel; cast door; grey finish; dust and fume resistant.

Dimensions—17¾" W x 13½" H x 15" D overall.

Mounting—Universal; flush, wall, or table.

Lock—In door handle.

Connection Terminals—Enclosed; conduit openings back, side, and bottom.

Accuracy—Within ±¼% of span or ±.025 mv whichever is greater on Potentiometer, and ±¼% of span or ±12.5 milliohms whichever is greater on Wheatstone Bridge.

Continued on Other Side

Specifications (continued)

Battery Condition Indicator—Graduated Index with red warning flag on Potentiometer. Indicating Light on Wheatstone Bridge.

Number of Points—One.

Scale—10" calibrated width, with large selection of standard markings.

Calibration—Many standard ranges for Potentiometer or Wheatstone Bridge. For spans and ranges not listed refer to the factory.

Reference Junction Compensation—Automatic on Potentiometer calibrated for use with Thermocouples.

Standardizing—Potentiometers: Fully Automatic every 45 minutes, or Semi-Automatic, as specified. Wheatstone Bridge: None required. Battery Eliminator when specified.

Operation—A-C only, 115 volts, 60 cycles, or 115 volts, 50 cycles as specified. An external transformer is required for 220 volt operation.

Type of Control—Position modulation with manual reset, throttling range adjustable 0-25%. Use Beck Relay Detector and Motor Operator.

Carriage Speed—Approximately 2, 10, 20 or 60 seconds, as specified. Standard is 20 seconds.

Chart Speeds:

Multiple—1, 2, 3, 4 and 6 inches per hour, or 2, 4, 6, 8 and 12 inches per hour, or 4, 8, 12, 16 and 24 inches per hour

Single—Speeds ranging from 24 to 960 inches per hour (20 steps).

Position modulation with automatic reset, throttling range adjustable 0-200%. Use Beck Relay Detector and Motor Operator.

Time modulation with automatic reset, throttling range adjustable 0-75%. Pulse cycle adjustable from 10 to 180 seconds. Use Beck Putmo Detector. Front set control index standard. External index setting knob can be provided.

Alarm Contacts—Provisions are made for the addition of six separate SPDT back set, individually adjusted switches. Rating 3 amperes, 115 volts a-c, non-inductive.

Actuations—Temperature, Pressure, Flow, Speed, pH, Conductivity, Humidity, Volts, Amps, Watts, Millivolts, Milliamps, Speed Ratio and many others.

How To Order

To be sure of receiving the proper Recorder Controller for your particular application, be sure to give the following information:

A. Model Number of Daystrom-Weston Recorder Controller.
B. Scale Range
C. Chart Range
D. Reference Junction Compensation, if required
E. For Use With (specify type of thermocouple or other actuating device)
F. Standardization
G. Supply Voltage and Frequency
H. Carriage Speed
I. Chart Speed
J. Type of Control
K. Special Features, such as Alarm Contacts, etc.

Prices Available Upon Application

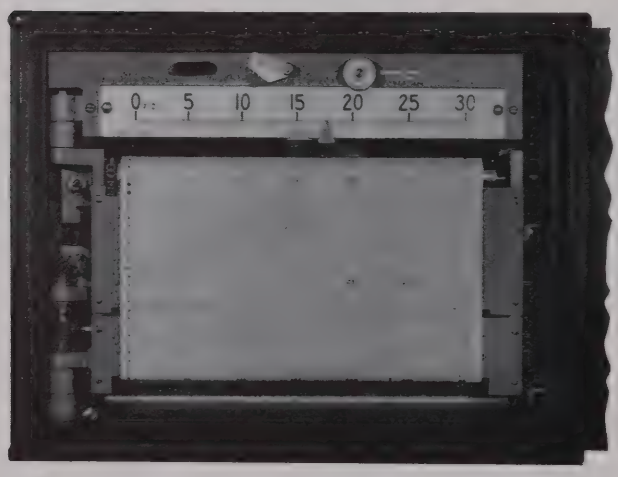

Front View of Model 6731 Potentiometer, Door Open.

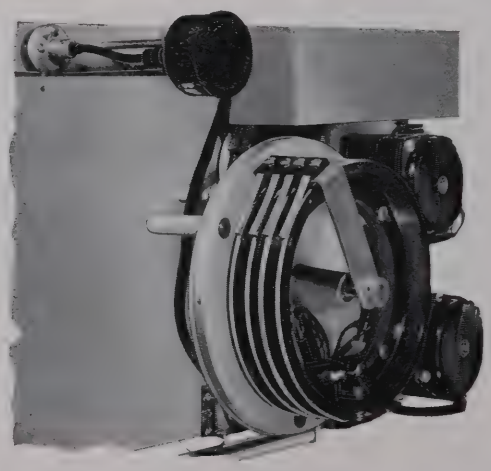

Rear View of Main Frame Including Control Setting Slidewire.

WESTON INSTRUMENTS, DIVISION OF DAYSTROM, INCORPORATED, NEWARK 12, N. J., U.S.A.

PRINTED IN U.S.A.

CIRCULAR M-17-A
AUGUST 1958

DAYSTROM-WESTON

PRESSURE RECORDER

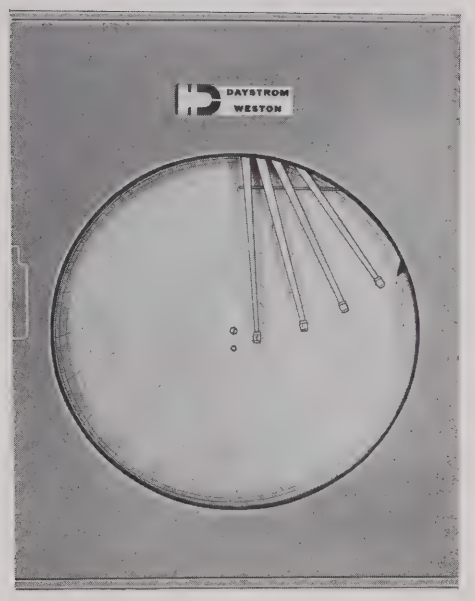

Single Pen — Model 7711 ***Multi-Pen — 7712***

- Dust and Moisture Proof Case
- Universal Mounting — Flush or Surface
- 12" Chart — 4.75" Pen Travel
- Interchangeable pressure system
- One, two, three or four recording pens.
- S. A. M. A. Standard Chart Drives, Electric or Hand Wound
- Flush latch handle — no projections on front of case
- Door stop — maximum door opening 135°
- Rugged bridge type pen arm suspension
- Large capacity pen
- All internal components mounted on baseplate
- Front of Panel Dimension — $14\frac{3}{16}$" W X $18\frac{3}{4}$" H (X $\frac{31}{32}$" PROJECTING)
- Pen Lifter
- Optional Features—Chart Illumination, lock with S. A. M. A. Standard Key

General

Weston Pressure Recorders cover the range of 30" of vacuum to 7500 psig. Accurately calibrated Bellows or Bourdon Springs serve as the actuating element according to the pressure range. Absolute pressure ranges from 0 — 760 MM mercury.

Ordering Specifications

1. Number of Pens
2. Pressure Range
3. Chart Rotation Time
4. Type of Chart Drive
5. Details of measured fluid, if corrosive

Continued on Other Side

Dimensional Diagrams — Models 7711 and 7712

(All dimensions are approximate.)

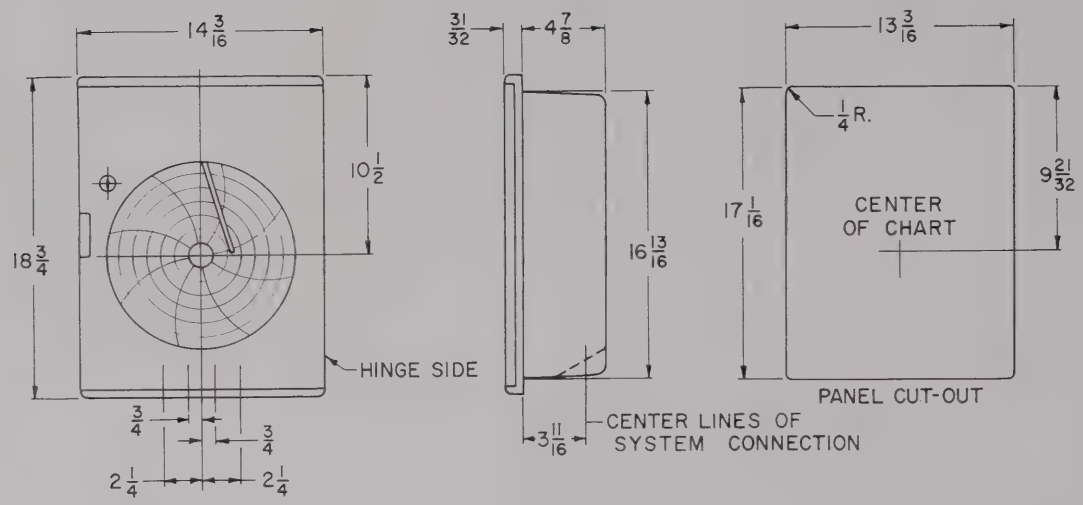

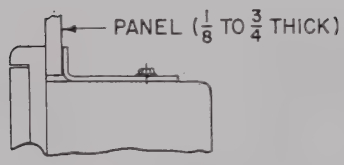

FLUSH (PANEL) MOUNTING

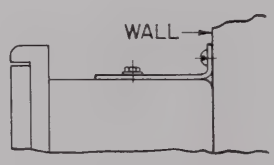

WALL (SURFACE) MOUNTING

WESTON INSTRUMENTS, DIVISION OF DAYSTROM, INCORPORATED, NEWARK 12, N. J., U.S.A.

PRINTED IN U.S.A.

DAYSTROM-WESTON TEMPERATURE RECORDER

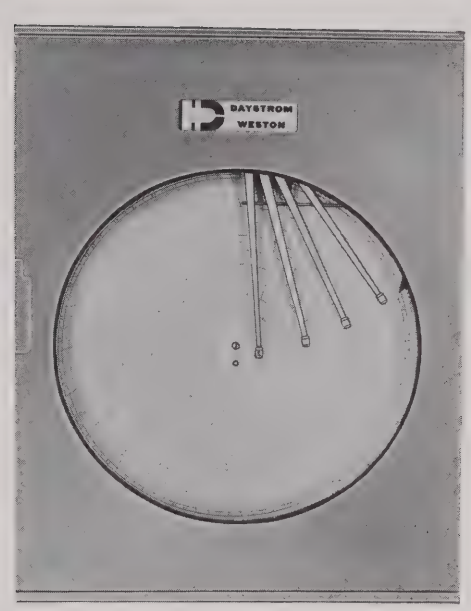

Single Pen — Model 7811 *Multi-Pen — Model 7812*

- Dust and moisture-resistant case
- Universal Mounting — Flush or Surface
- 12" Chart — 4.75" Pen Travel
- Interchangeable thermal system
- One, two, three or four recording pens.
- S. A. M. A. Standard Chart Drives, Electric or Hand Wound
- Flush latch handle — no projections on front of case
- Door stop — maximum door opening 135°
- Rugged bridge type pen arm suspension
- Large capacity pen
- All internal components mounted on baseplate
- Front of Panel Dimension — 14 3/16" W X 18 3/4" H (X 1 31/32" Projecting)
- Pen Lifter
- Optional Features—Chart Illumination; lock with S. A. M. A. standard key

General

Daystrom-Weston Temperature Recorders cover the complete range of filled system instruments, converting the measured temperature into a permanent chart record. Charts and Ranges are available as low as —100F and as high as 1000F. Liquid, vapor, gas and mercury filled thermal systems are available to suit each individual application.

Thermal System Specifications

Class	Description	Max. Length*	Temp. Limits
1B	Liquid Filled — Standard Compensation	10 ft.	—100F to 500F
2	Vapor Pressure	200 ft.	—30F to 500F
2D	Vapor Pressure — Dual Filled	200 ft.	—30F to 500F
3	Gas Filled	160 ft.	—325F to 1000F
5B	Mercury Filled — Standard Compensation	25 ft.	—40F to 1000F
5C	Mercury Filled — Self Compensating	250 ft.	—40F to 1000F

*See dial thermometer catalog (09-200) for specific limitations due to bulb size.

Continued on Other Side

Ordering Information Required:

A. Model Number
B. Number of Pens
C. Temperature Range
D. Chart Rotation Time
E. Type of Chart Drive. (Specify voltage and frequency, if electric.)
F. Length of Capillary Tubing
G. Type of Thermal Well and fittings and details of measured fluid, if corrosive
H. Special Features

Shipping Weight—Approximately 40 lbs.

Dimensional Diagram — Models 7811 and 7812

(All dimensions are approximate.)

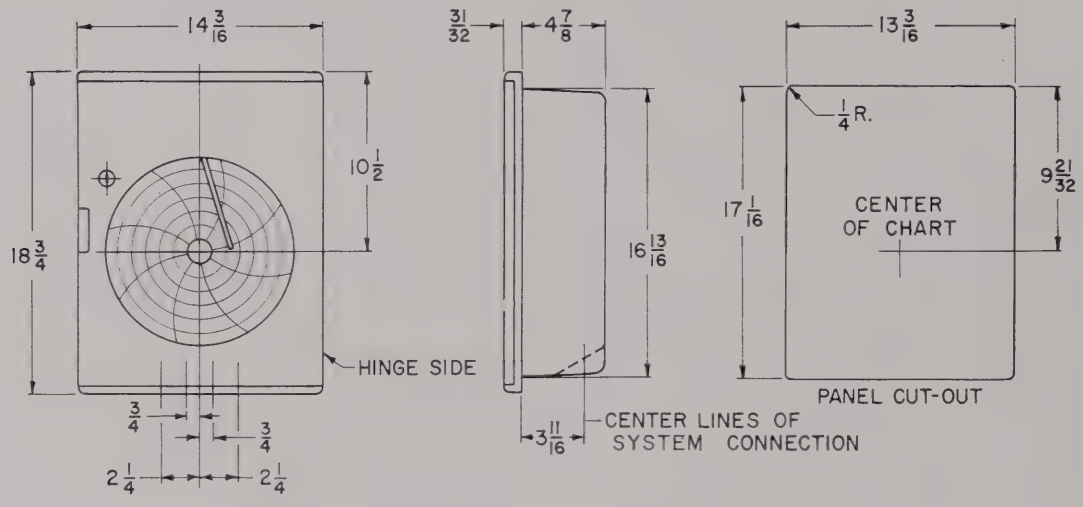

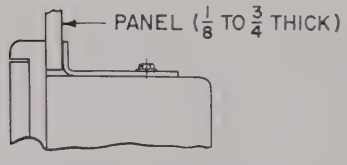

FLUSH (PANEL) MOUNTING

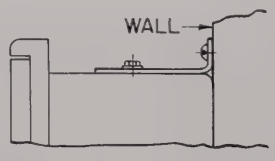

WALL (SURFACE) MOUNTING

WESTON INSTRUMENTS, DIVISION OF DAYSTROM, INCORPORATED, NEWARK 12, N. J., U.S.A.

PRINTED IN U.S.A.

SECTION II

GROUPS I AND II

CATEGORY 3 – MECHANICAL INSTRUMENTS – SERIES 7000

DIVISION A – TEMPERATURE INSTRUMENTS

GROUP I = BASIC MODEL NUMBER
GROUP II = ACTUATION – NO. OF PENS
GROUP III = CHART DRIVE
GROUP IV = CONTROL
GROUP V = FEATURES

GROUP I BASIC NO. SPECIFY	NO. OF PENS	GROUP II ACTUATION		DESCRIPTION	LIST PRICE*
		DESCRIP.	SPECIFY		
7811	1	1B	A	Single Pen – Recorder	$180.00
7811	1	2	B	Single Pen – Recorder	175.00
7811	1	2C	C	Single Pen – Recorder	180.00
7811	1	3	D	Single Pen – Recorder	187.00
7811	1	5B	E	Single Pen – Recorder	190.00
7811	1	5C	F	Single Pen – Recorder	193.00
7812	2	1B	AA	Two Pen – Recorder	278.00
7812	2	2	BB	Two Pen – Recorder	270.00
7812	2	2D	CC	Two Pen – Recorder	278.00
7812	2	3	DD	Two Pen – Recorder	288.00
7812	2	5B	EE	Two Pen – Recorder	290.00
7812	2	5C	FF	Two Pen – Recorder	294.00
7812	3	1B	AAA	Three Pen – Recorder	385.00
7812	3	2	BBB	Three Pen – Recorder	380.00
7812	3	2D	CCC	Three Pen – Recorder	385.00
7812	3	3	DDD	Three Pen – Recorder	393.00
7812	3	5B	EEE	Three Pen – Recorder	395.00
7812	3	5C	FFF	Three Pen – Recorder	400.00
7812	4	1B	AAAA	Four Pen – Recorder	490.00
7812	4	2	BBBB	Four Pen – Recorder	485.00
7812	4	2D	CCCC	Four Pen – Recorder	490.00
7812	4	3	DDDD	Four Pen – Recorder	500.00
7812	4	5B	EEEE	Four Pen – Recorder	510.00
7812	4	5C	FFFF	Four Pen – Recorder	530.00
7815	1	1B	A	Pneumatic Control – Recorder	378.00
7815	1	2	B	Pneumatic Control – Recorder	370.00
7815	1	2D	C	Pneumatic Control – Recorder	378.00
7815	1	3	D	Pneumatic Control – Recorder	382.00
7815	1	5B	E	Pneumatic Control – Recorder	385.00
7815	1	5C	F	Pneumatic Control – Recorder	390.00

*Price includes 5 feet of tubing.

NOTE: For Mixed System Multi-point Recorders use designation of correct type of actuation i.e. (DEFF). Price as Recorder with all systems the same, using price of Recorder with all systems the same as greatest number of systems in mixed group. Deduct $40.00 for each Pressure System, then add appropriate range addition according to pressure range, for each Pressure System. Use Model No. 7612 for any recorder employing both Pressure and Temperature Systems.

GROUP I AND II (Cont'd.)

DIVISION A – TEMPERATURE INSTRUMENTS

CATEGORY 3

GROUP 1 BASIC NO. SPECIFY	NO. OF PENS	GROUP II ACTUATION		DESCRIPTION	LIST PRICE
		DESCRIP.	SPECIFY	RECORDER	
7816	2	1B	AA	Pneumatic Control on Both Pens	$658.00
7816	2	2	BB	Pneumatic Control on Both Pens	650.00
7816	2	2D	CC	Pneumatic Control on Both Pens	658.00
7816	2	3	DD	Pneumatic Control on Both Pens	668.00
7816	2	5B	EE	Pneumatic Control on Both Pens	670.00
7816	2	5C	FF	Pneumatic Control on Both Pens	674.00
7817	2	1B	AA	Pneumatic Control on One Pen	478.00
7817	2	2	BB	Pneumatic Control on One Pen	470.00
7817	2	2D	CC	Pneumatic Control on One Pen	478.00
7817	2	3	DD	Pneumatic Control on One Pen	488.00
7817	2	5B	EE	Pneumatic Control on One Pen	490.00
7817	2	5C	FF	Pneumatic Control on One Pen	494.00

GROUP III – CHART DRIVES

CATEGORY 3

SPECIFY NUMBER	DESCRIPTION	LIST PRICE	CAN BE USED WITH				
			7811	7812	7815	7816	7817
2	Electric – 24 Hr. Rotation	N. C.	✓	✓	✓	✓	✓
3	Electric – 7 Day Rotation	N. C.	✓	✓	✓	✓	✓
4	Hand Wound – 24 Hr. Rotation	N. C.	✓	✓	✓	✓	✓
5	Hand Wound – 7 Day Rotation	N. C.	✓	✓	✓	✓	✓
6	Electric – 8 Hr. Rotation	N. C.	✓	✓	✓	✓	✓
7	Electric – 12 Hr. Rotation	N. C.	✓	✓	✓	✓	✓
8	Electric – 48 Hr. Rotation	N. C.	✓	✓	✓	✓	✓
9	Hand Wound – 8 Hr. Rotation	N. C.	✓	✓	✓	✓	✓
10	Hand Wound – 12 Hr. Rotation	N. C.	✓	✓	✓	✓	✓
11	Hand Wound – 48 Hr. Rotation	N. C.	✓	✓	✓	✓	✓

DAYSTROM-WESTON

WET AND DRY BULB TEMPERATURE RECORDER

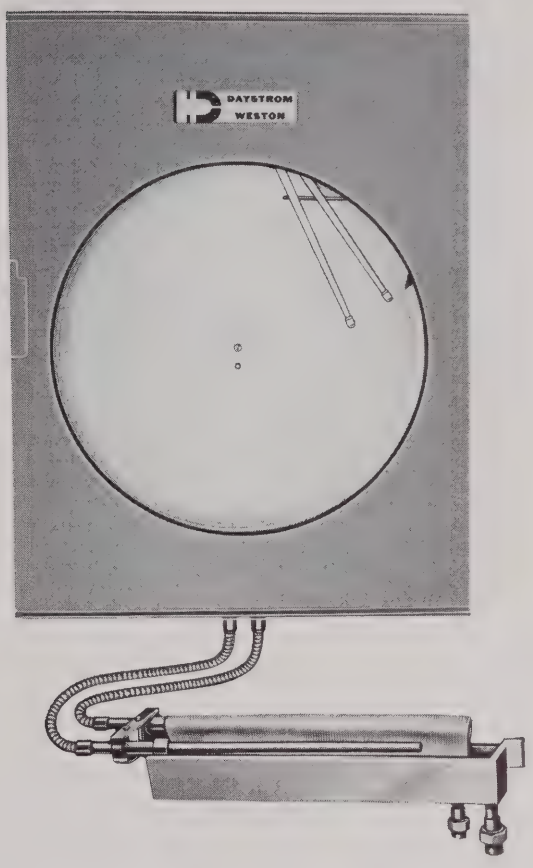

Multi-point — Model 7812

- Dust and Moisture Resistant Case
- Universal Mounting — Flush or Surface
- 12" Chart — 4.75" Pen Travel
- Interchangeable thermal system
- Two recording pens
- S. A. M. A. Standard Chart Drives, Electric or Hand Wound Drives
- Flush latch handle — no projections on front of case
- Circulating water trough
- Door stop — maximum door opening 135°
- Rugged bridge type pen arm suspension
- Large capacity pens
- All internal components mounted on baseplate
- Front of Panel Dimension — 14 3/16" W X 18 3/4" H (x 31/32" Projecting)
- Pen Lifter
- Optional Features—Chart Illumination, Lock with S. A. M. A. standard key

General

Standard two-pen recording thermometers with air temperature bulbs, wick and circulating water trough are used to make up recording psychrometers. Wet-and-dry-bulb temperature records, simultaneously taken, provide the most dependable means of determining relative humidity, when reference is made to a psychrometric table. This method provides a very stable and dependable means of determining the humidity in the air.

The frequent necessity of recalibration, which is necessary in some humidity measuring devices, is not required in a wet-and-dry bulb instrument. Such checks as may be required, are quickly and easily made by comparing the reading at one point on the scale with another accurate thermometer.

Tube System Specifications

Class	Description	Max. Length	Temp. Limits
5B	Mercury Filled — Standard Compensation....	25 ft.	32 to 212F
5C	Mercury Filled — Self Compensating.....	250 ft.	32 to 212F

Recommended Ranges

0-100F or C	0-110F	0.150F	0-200F

Continued on Other Side

Ordering Information Required:

1. Temperature Range
2. Chart Rotation Time
3. Type of Chart Drive
4. Length of Capillary Tubing

Dimensional Diagram — Model 7812

(All dimensions are approximate)

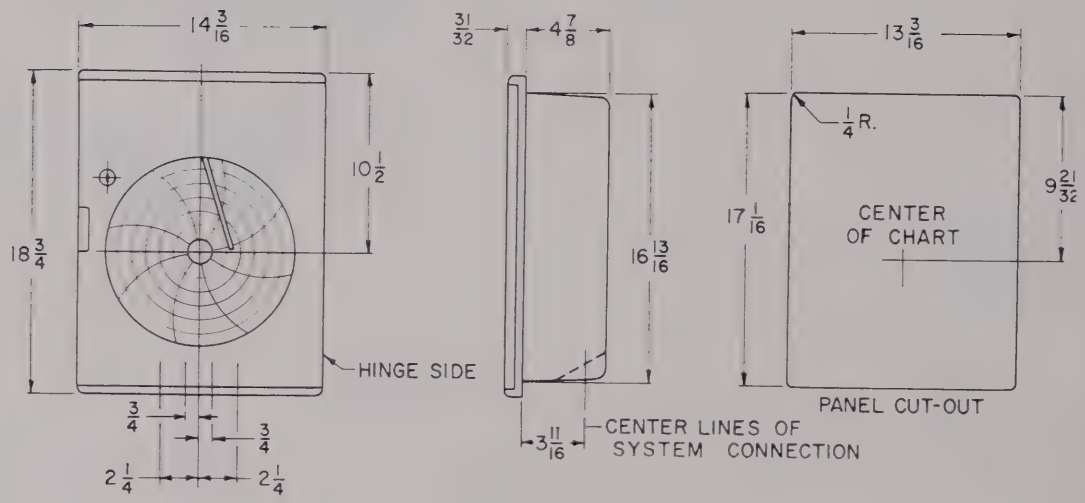

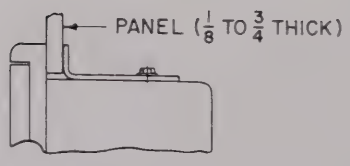

FLUSH (PANEL) MOUNTING

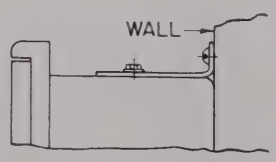

WALL (SURFACE) MOUNTING

WESTON INSTRUMENTS, DIVISION OF DAYSTROM, INCORPORATED, NEWARK 12, N. J., U. S. A.

PRINTED IN U.S.A.

DAYSTROM-WESTON

PRESSURE RECORDER - CONTROLLER

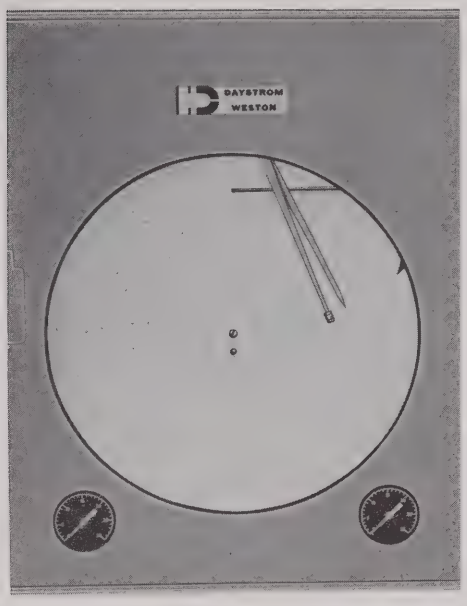

Single Pen — Model 7715

Two Pen, Two Control Unit — Model 7716 • Two Pen, One Control Unit — Model 7717

- Dust and Moisture Proof Case
- Universal Mounting — Flush or Surface
- 12" Chart — 4.75" Pen Travel
- Interchangeable pressure system
- One or two recording pens
- Pneumatic Control — available as:
  - Universal Controller: 2-50% Proportional Band, On-Off, and 2-100% Differential Gap, Manual Reset
  - Proportional (2-300%) Plus Automatic Reset
  - Proportional (2-300%) Plus Automatic Reset Plus Derivative
- Four Position Transfer Station (Optional)
- Performance
  - Steady state air consumption, 0.08 SCFM
  - Relay valve capacity, 1.8 SCFM
  - Action: Direct — measurement increase, output increase
  - Reverse — measurement increase, output decrease
- Operational Limits
  - 30 psig maximum pressure
  - 150F maximum temperature
- Supply
  - 20 psig regulated and filtered air
- S. A. M. A. Standard Chart Drives, Electric or Hand Wound
- Flush latch handle — no projections on front of case
- Door stop — maximum door opening 135°
- Rugged bridge type pen arm suspension
- Large capacity pen
- All internal components mounted on baseplate
- Front of Panel Dimension — $14\frac{3}{16}$" W x $18\frac{3}{4}$" H (x $\frac{31}{32}$" PROJECTING)
- Pen Lifter
- Optional Features — Chart Illumination, lock with S. A. M. A. Standard Key

General

Daystrom-Weston Pressure Recorder-Controllers cover the range of 30" of vacuum to 7500 psig. Accurately calibrated Bellows or Bourdon Springs serve as the actuating element according to the pressure range. Absolute pressure ranges from 0-760 MM mercury. These instruments can be equipped with mechanical input type controllers for in-case mounting. The components are enclosed in one protective housing and are independent of the instrument spindle assembly and therefore can be removed from the case as a unit.

Universal Controller — The controller can be applied to the majority of processes since it can be used as a proportional controller (2 to 50% PB), an on-off controller, or a differential gap controller (2 to 100% DG). Settings are easily made by rotating the dial on the front of the control unit. Manual reset is also provided by adjusting the knob at the top of the control unit.

Proportional Controller with Reset or Reset and Derivative — This group of controllers is recommended for the more complex processes with capacity or where appreciable transfer lag and/or dead-time is present. These processes require wide

Continued on Other Side

proportional control response coupled with automatic reset and/or derivative response. Proportional band adjustability for this group of controllers is 2 to 300%. Automatic reset or derivative is achieved by the addition of reset or derivative valves to the basic proportional controller. Reset and derivative valves are adjustable from 0.02 to 5 minutes.

The 4-Position Transfer Station — The design of this station provides complete control loop flexibility. The piping of the "flip-switch" provides true bumpless transfer since gage accuracy is not a governing factor. In the TEST position a complete open-loop controller alignment and performance check can be made with simultaneous manual control.

Ordering Specifications

1. Number of Pens
2. Pressure Range
3. Chart Rotation Time
4. Type of Chart Drive
5. Details of measured fluid, if corrosive
6. Type of Control
7. Reverse or Direct Acting Control

Dimensional Diagrams — Models 7715 - 7716 - 7717

(All dimensions are approximate.)

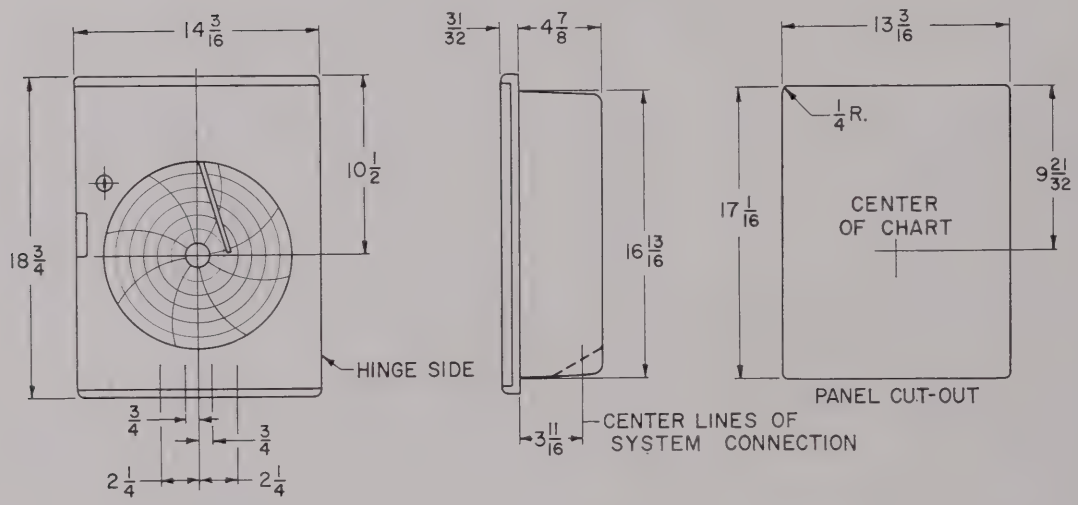

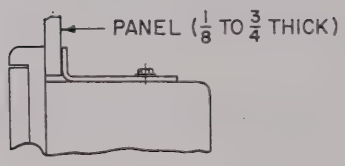

FLUSH (PANEL) MOUNTING

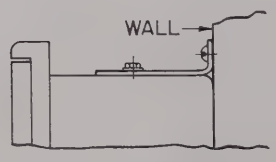

WALL (SURFACE) MOUNTING

WESTON INSTRUMENTS, DIVISION OF DAYSTROM, INCORPORATED, NEWARK 12, N. J., U.S.A.

PRINTED IN U.S.A.

DAYSTROM-WESTON

PNEUMATIC RECEIVER RECORDER - CONTROLLER

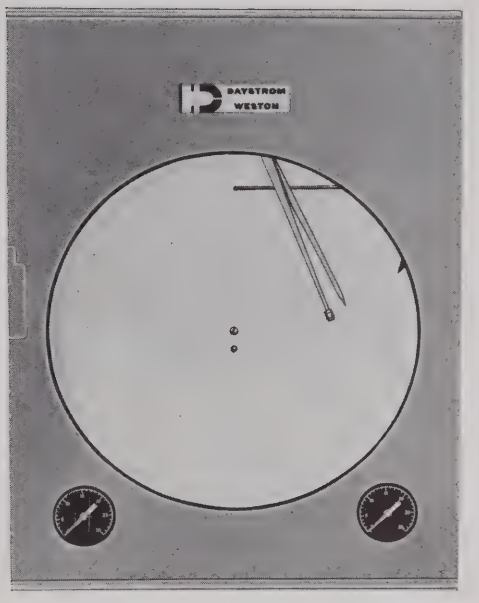

Single Pen — Model 7765

Two Pen, Two Control Unit — Model 7766 • Two Pen, One Control Unit — Model 7767

- Dust and Moisture Resistant Case
- Universal Mounting — Flush or Surface
- 12″ Chart — 4.75″ Pen Travel
- 3-15 psig Receiver Range
- One or two recording pens
- Pneumatic Control — available as:
  Universal Controller: 2-50% Proportional Band, On-Off, and 2-100% Differential Gap, Manual Reset
  Proportional (2-300%) Plus Automatic Reset
  Proportional (2-300%) Plus Automatic Reset Plus Derivative
- Four Position Transfer Station (Optional)
- Performance
  Steady state air consumption, 0.08 SCFM
  Relay valve capacity, 1.8 SCFM
  Action: Direct—measurement increase, output increase
  Reverse — measurement increase, output decrease
- Operational Limits
  30 psig maximum pressure air supply
  150F maximum temperature
- Supply — 20 psig regulated and filtered air
- Chart Drives, electric or SAMA standard hand wound.
- Flush latch handle — no projections on front of case
- Door stop — maximum door opening 135°
- Rugged bridge type pen arm suspension
- Large capacity pen
- All internal components mounted on baseplate
- Front of Panel Dimension — 14 3/16″ W x 18 3/4″ H (x 31/32″ Projecting)
- Pen Lifter
- Optional Features — Chart Illumination, lock with S. A. M. A. Standard Key

General

Daystrom-Weston Pneumatic Receivers operate on a 3-15 psig signal. An accurately calibrated bellows serves as the actuating element. Receiver available for use with Temperature, Pressure, Flow, Liquid Level and Differential Pressure Transmitters.

These instruments are equipped with mechanical input type controllers for in-case mounting. The components are enclosed in one protective housing and are independent of the instrument spindle assembly and therefore can be removed from the case as a unit.

Universal Controller—The controller can be applied to the majority of processes since it can be used as a proportional controller (2 to 50% PB), an on-off controller, or a differential gap controller (2 to 100% DG). Settings are easily made by rotating the dial on the front of the control unit. Manual reset is also provided by adjusting the knob at the top of the control unit.

Continued on Other Side

Proportional Controller with Reset or Reset and Derivative—This group of controllers is recommended for the more complex processes with capacity or where appreciable transfer lag and/or dead-time is present. These processes require wide proportional control response coupled with automatic reset and/or derivative response. Proportional band adjustability for this group of controllers is 2 to 300%. Automatic reset or derivative is achieved by the addition of reset or derivative valves to the basic proportional controller. Reset and derivative valves are adjustable from 0.02 to 5 minutes.

The 4-Position Transfer Station — The design of this station provides complete control loop flexibility. The piping of the "flip-switch" provides true bumpless transfer since gage accuracy is not a governing factor. In the TEST position a complete open-loop controller alignment and performance check can be made with simultaneous manual control.

Ordering Specifications

1. Number of Pens
2. Chart Range
3. Chart Rotation Time
4. Type of Chart Drive
5. Type of Transmitter
6. Type of Control
7. Reverse or Direct Acting Control

Dimensional Diagrams — Models 7765 - 7766 - 7767

(All dimensions are approximate)

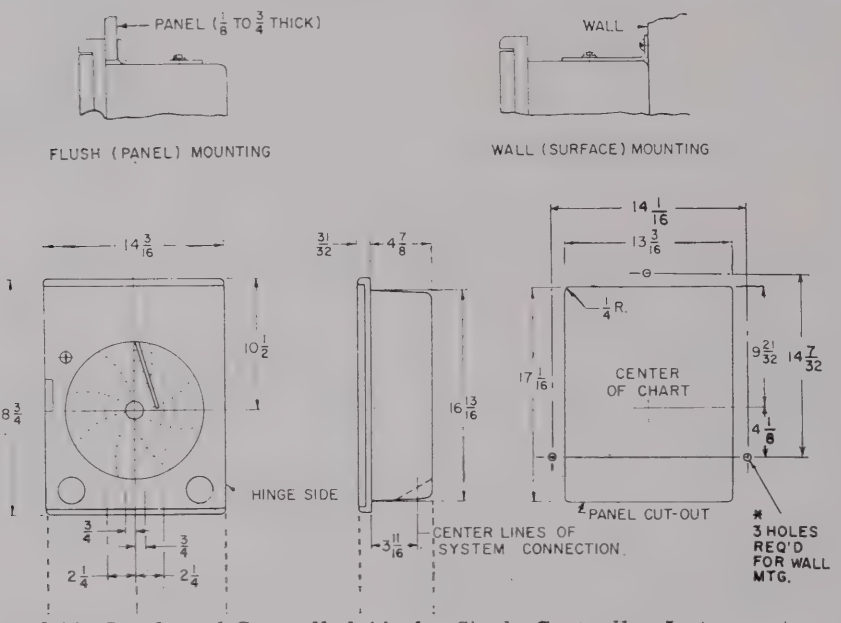

Location of Air Supply and Controlled Air for Single Controller Instruments

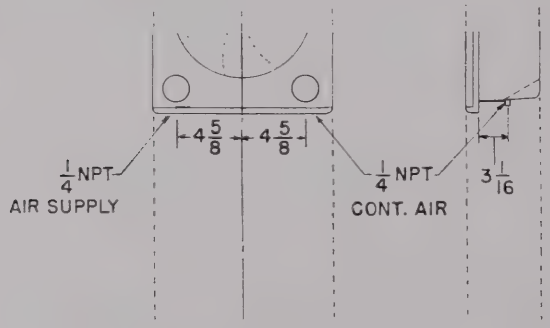

Location of Air Supply and Controlled Air for Dual Controller Instruments

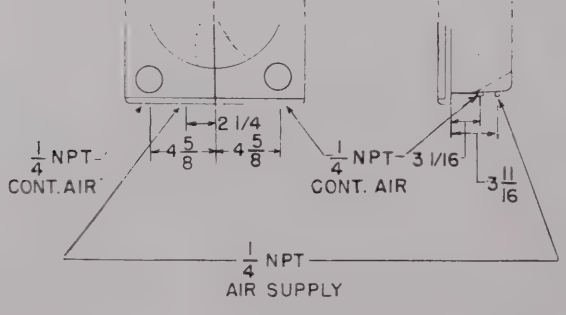

WESTON INSTRUMENTS, DIVISION OF DAYSTROM, INCORPORATED, NEWARK 12, N. J., U.S.A.

PRINTED IN U.S.A.

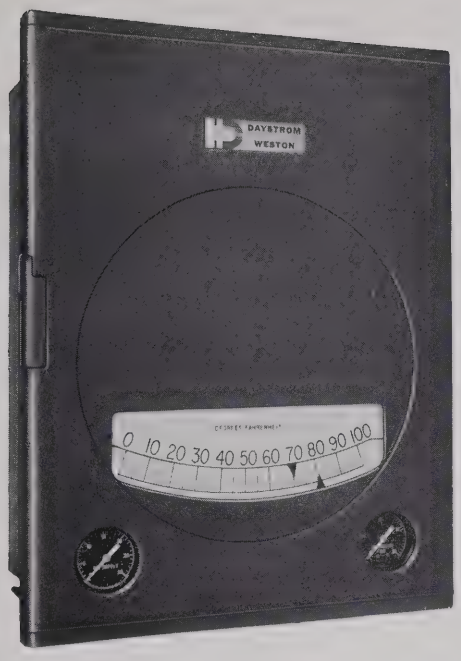

DAYSTROM-WESTON

TEMPERATURE INDICATING CONTROLLER

Single Point — Model 7415

- Dust and Moisture Resistant Case
- Universal Mounting — Flush or Surface
- 8½″ Scale
- Interchangeable thermal system
- Pneumatic Control — available as:
  Universal Controller: 2-50% Proportional Band, On-Off, and 2-100% Differential Gap, Manual Reset
  Proportional (2-300%) Plus Automatic Reset
  Proportional (2-300%) Plus Automatic Reset Plus Derivative
- Four Position Transfer Station (Optional)
- Performance
  Steady state air consumption, 0.08 SCFM
  Relay valve capacity, 1.8 SCFM
  Action: Direct—measurement increase, output increase
  Reverse — measurement increase, output decrease
- Operational Limits
  30 psig maximum pressure
  150F maximum temperature
- Supply — 20 psig regulated and filtered air
- Flush latch handle — no projections on front of case
- Door stop — maximum door opening 135°
- Rugged bridge type pointer suspension
- All internal components mounted on baseplate
- Front of Panel Dimension — 14$^{3}/_{16}$″ W x 18¾″ H (x $^{31}/_{32}$″ Projecting)
- Optional Features — lock with S. A. M. A. Standard Key

General

Daystrom-Weston Temperature Indicating-Controllers cover the complete range of filled system instruments. Ranges are available as low as −100F and as high as 1000°F. Liquid, vapor, gas and mercury filled tube systems are available to suit each individual application.

Universal Controller — The controller can be applied to the majority of processes since it can be used as a proportional controller (2 to 50% PB), an on-off controller, or a differential gap controller (2 to 100% DG). Settings are easily made by rotating the dial on the front of the control unit. Manual reset is also provided by adjusting the knob at the top of the control unit.

Proportional Controller with Reset or Reset and Derivative — This group of controllers is recommended for the more complex processes with capacity or where appreciable transfer lag and/or dead-time is present. These processes require wide proportional control response coupled with automatic reset and/or derivative response. Proportional band adjustability for this group of controllers is 2 to 300%. Automatic reset or derivative is achieved by the addition of reset or derivative valves to the basic proportional controller. Reset and derivative valves are adjustable from 0.02 to 5 minutes.

Continued on Other Side

The 4-Position Transfer Station—The design of this station provides complete control loop flexibility. The piping of the "flip-switch" provides true bumpless transfer since gage accuracy is not a governing factor. In the TEST position a complete open-loop controller alignment and performance check can be made with simultaneous manual control.

Tube System Specifications

Class	Description	Max. Length*	Temp. Limits
1B	Liquid Filled — Standard Compensation	10 ft.	—100F to 500F
2	Vapor Pressure	200 ft.	—30F to 500F
2D	Vapor Pressure — Dual Filled	200 ft.	—30F to 500F
3	Gas Filled	160 ft.	—325F to 1000F
5B	Mercury Filled — Standard Compensation	25 ft.	—40F to 1000F
5C	Mercury Filled — Self Compensating	250 ft.	—40F to 1000F

*See dial thermometer catalog (09-200) for specific limitations due to bulb size.

Ordering Specifications

1. Temperature Range
2. Length of Capillary Tubing
3. Type of Thermal Well and Fittings
4. Details of measured fluid, if corrosive
5. Type of Control
6. Reverse or Direct Acting Control

Dimensional Diagram — Model 7415

(All dimensions are approximate)

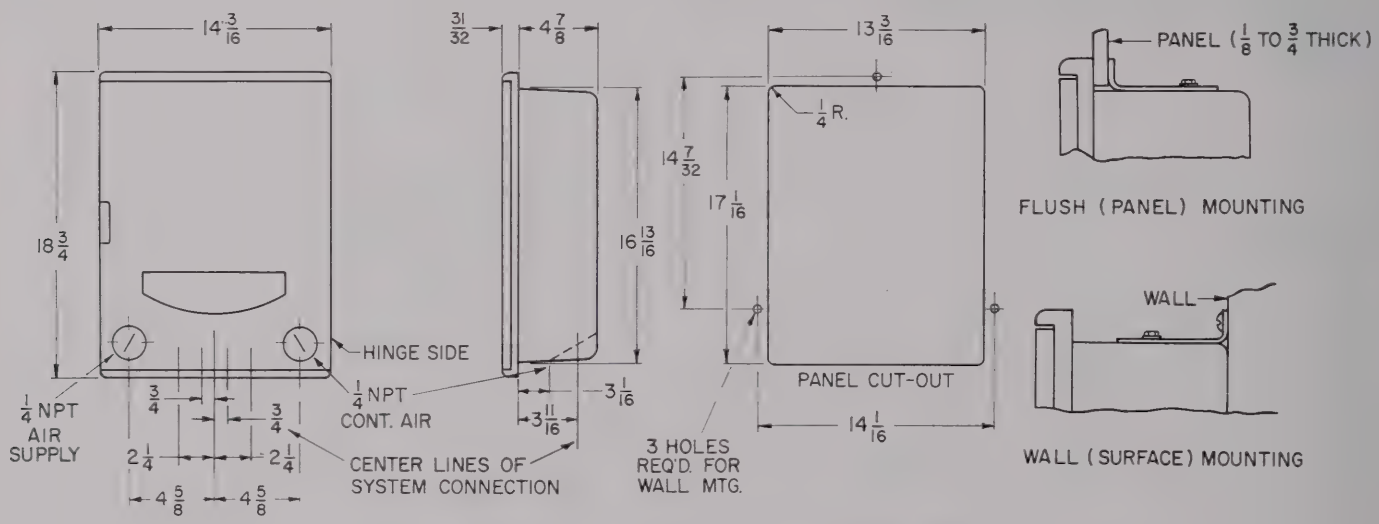

Front View Showing Single Control Unit.

WESTON INSTRUMENTS, DIVISION OF DAYSTROM, INCORPORATED, NEWARK 12, N.J., U.S.A.

PRINTED IN U.S.A.

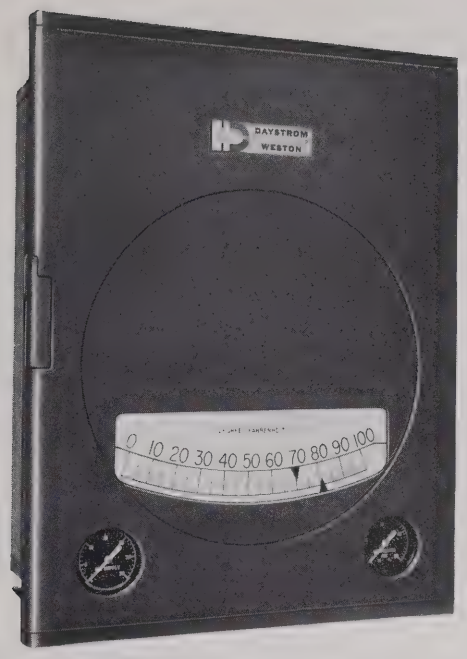

DAYSTROM-WESTON

PRESSURE INDICATING CONTROLLER

Single Point — Model 7315

- Dust and Moisture Resistant Case
- Universal Mounting — Flush or Surface
- 8½″ Scale
- Interchangeable pressure system
- Pneumatic Control — available as:
  Universal Controller: 2-50% Proportional Band, On-Off, and 2-100% Differential Gap, Manual Reset
  Proportional (2-300%) Plus Automatic Reset
  Proportional (2-300%) Plus Automatic Reset Plus Derivative
- Four Position Transfer Station (Optional)
- Performance
  Steady state air consumption, 0.08 SCFM
  Relay valve capacity, 1.8 SCFM
  Action: Direct—measurement increase, output increase
  Reverse — measurement increase, output decrease
- Operational Limits
  30 psig maximum pressure
  150F maximum temperature
- Supply — 20 psig regulated and filtered air
- Flush latch handle — no projections on front of case
- Door stop — maximum door opening 135°
- Rugged bridge type pointer suspension
- Large capacity pen
- All internal components mounted on baseplate
- Front of Panel Dimension — 14$^{3}/_{16}$″ W x 18¾″ H (x $^{31}/_{32}$″ Projecting)
- Optional Features — lock with S. A. M. A. Standard Key

General

Daystrom-Weston Pressure Indicating Controllers cover the range of 30″ of vacuum to 7500 psig. Accurately calibrated Bellows or Bourdon Springs serve as the actuating element according to the pressure range. Absolute pressure ranges from 0-760 MM mercury. These instruments can be equipped with mechanical input type controllers for in-case mounting. The components are enclosed in one protective housing and are independent of the instrument spindle assembly and therefore can be removed from the case as a unit.

Universal Controller — The controller can be applied to the majority of processes since it can be used as a proportional controller (2 to 50% PB), an on-off controller, or a differential gap controller (2 to 100% DG). Settings are easily made by rotating the dial on the front of the control unit. Manual reset is also provided by adjusting the knob at the top of the control unit.

Continued on Other Side

Proportional Controller with Reset or Reset and Derivative — This group of controllers is recommended for the more complex processes with capacity or where appreciable transfer lag and/or dead-time is present. These processes require wide proportional control response coupled with automatic reset and/or derivative response. Proportional band adjustability for this group of controllers is 2 to 300%. Automatic reset or derivative is achieved by the addition of reset or derivative valves to the basic proportional controller. Reset and derivative valves are adjustable from 0.02 to 5 minutes.

The 4-Position Transfer Station — The design of this station provides complete control loop flexibility. The piping of the "flip-switch" provides true bumpless transfer since gage accuracy is not a governing factor. In the TEST position a complete open-loop controller alignment and performance check can be made with simultaneous manual control.

Ordering Specifications

1. Pressure Range
2. Details of measured fluid, if corrosive
3. Type of Control
4. Reverse or Direct Acting Control

Dimensional Diagrams — Model 7315

(All dimensions are approximate)

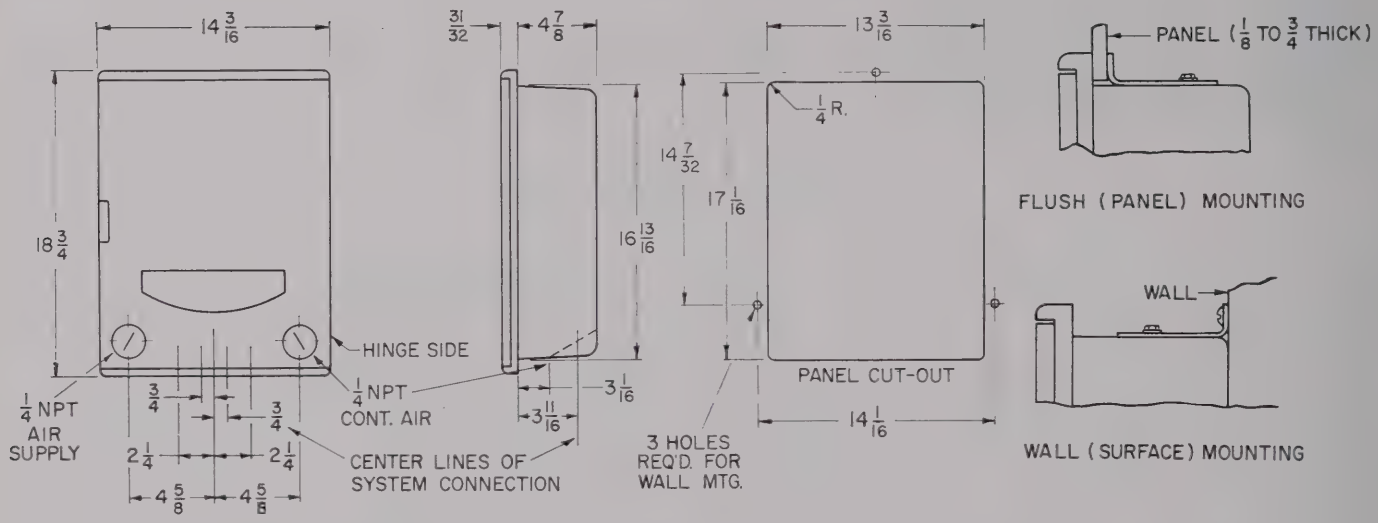

Front View Showing Single Control Unit.

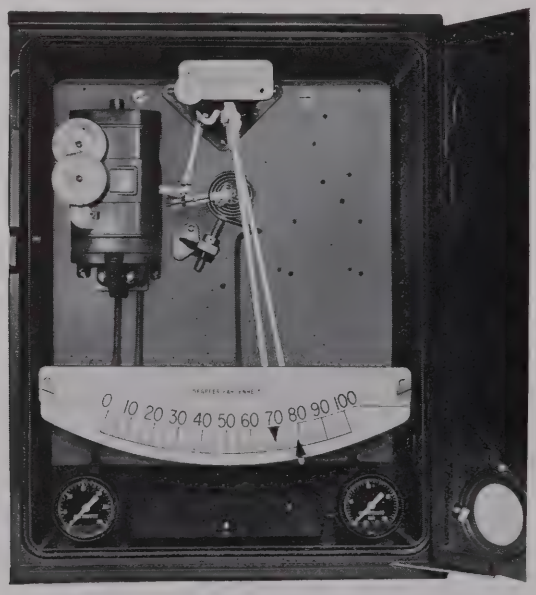

WESTON INSTRUMENTS, DIVISION OF DAYSTROM, INCORPORATED, NEWARK 12, N. J., U.S.A.

PRINTED IN U.S.A.

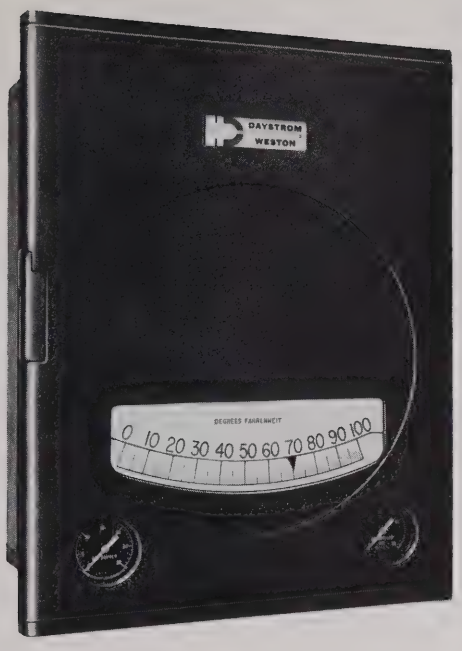

DAYSTROM-WESTON

TEMPERATURE INDICATING TRANSMITTER

Single Point — Model 7480

- Dust and Moisture Resistant Case
- Universal Mounting — Flush or Surface
- Interchangeable thermal and pressure systems
- Flush latch handle — no projections on front of case
- 3-15 psi pneumatic transmission signal
- Large capacity transmission signal
- Door stop — maximum door opening 135°
- Rugged bridge type pointer suspension
- All internal components mounted on baseplate
- Front of Panel Dimension — 14 3/16" W x 18 3/4" H (x 3 1/32" Projecting)
- Optional Features — lock with S. A. M. A. standard key

General

Daystrom-Weston Temperature Transmitters cover the complete range of filled system instruments. Ranges are available as low as —100F and as high as 1000F. Liquid, vapor, gas and mercury filled tube systems are available to suit each individual temperature application.

Tube System Specifications

Class	Description	Max. Length*	Temp. Limits
1B	Liquid Filled — Standard Compensation	10 ft.	—100F to 500F
2	Vapor Pressure	200 ft.	—30F to 500F
2D	Vapor Pressure — Dual Filled	200 ft.	—30F to 500F
3	Gas Filled	160 ft.	—325F to 1000F
5B	Mercury Filled — Standard Compensation	25 ft.	—40F to 1000F
5C	Mercury Filled — Self Compensating	250 ft.	—40F to 1000F

*Request dial thermometer catalog 09-200 for specific limitations due to bulb size.

Continued on Other Side

Ordering Information Required:

1. Temperature Range
2. Length of Capillary Tubing
3. Type of Thermal Well and fittings
4. Details of measured fluid, if corrosive

Dimensional Diagram — Model 7480

(All dimensions are approximate)

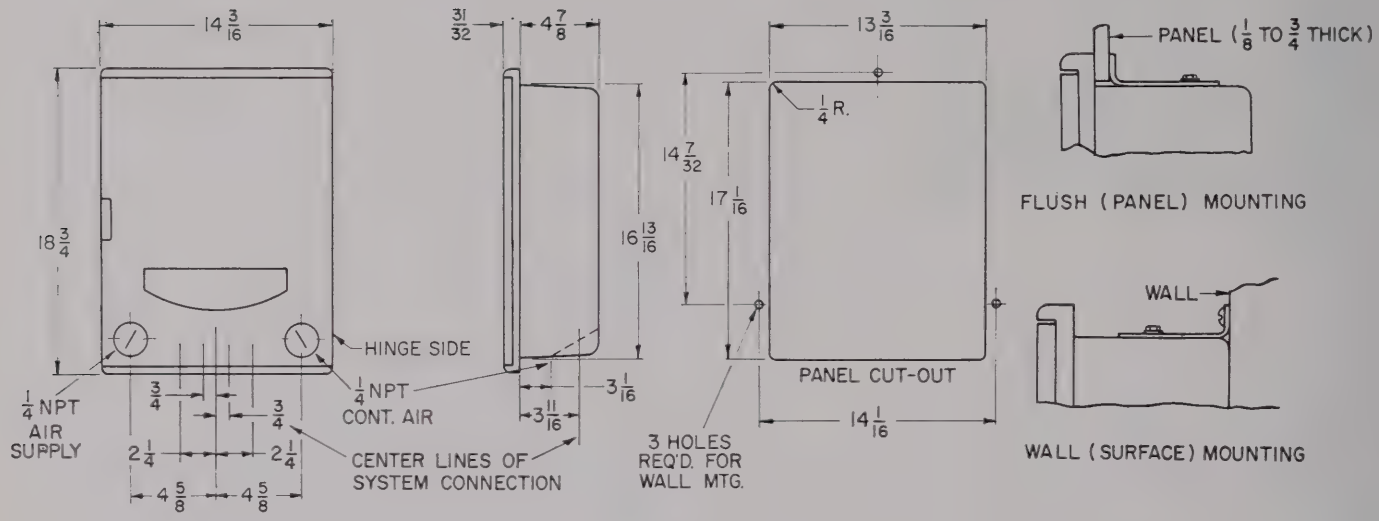

Cutaway View — Pneumatic Receiver Bellows

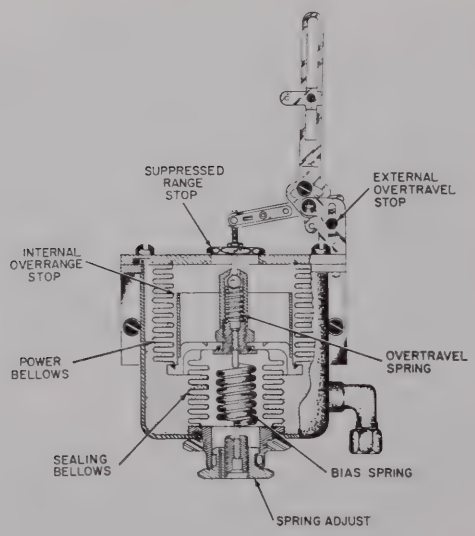

WESTON INSTRUMENTS, DIVISION OF DAYSTROM, INCORPORATED, NEWARK 12, N.J., U.S.A.

PRINTED IN U.S.A.

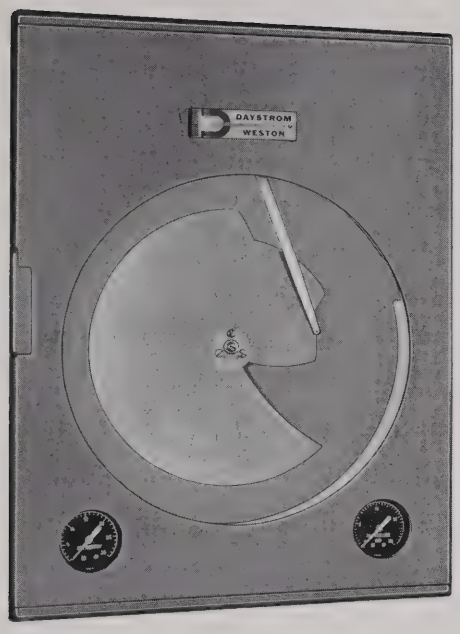

DAYSTROM-WESTON
PNEUMATIC CAM PROGRAM TRANSMITTER

Model 7002

- Dust and Moisture Resistant Case
- Universal Mounting — Flush or Surface
- Interchangeable cams
- Flush latch handle — no projections on front of case
- 3-15 psi pneumatic transmission signal
- Large capacity transmission signal
- 1, 8, 12, 24 hour and 7 day cam drives
- Single or double cams
- One or two transmission systems
- Door stop — maximum door opening 135°
- Rugged bridge type pointer suspension
- All internal components mounted on baseplate
- Front of Panel Dimension — 14$\frac{3}{16}$" W x 18$\frac{3}{4}$" H (x 3$\frac{1}{32}$" Projecting)
- Optional Features — lock with S. A. M. A. Standard Key

General

Daystrom-Weston Program Transmitters are available as single or dual units. A full line of controllers are available to complete the program control system. Controllers with a receiver unit on the control index are used as the other half of the program control system.

ORDERING SPECIFICATIONS

1. Number of systems
2. Cam Rotation Time
3. Cam Range

Continued on Other Side

Dimensional Diagrams — Model 7002

(All dimensions are approximate)

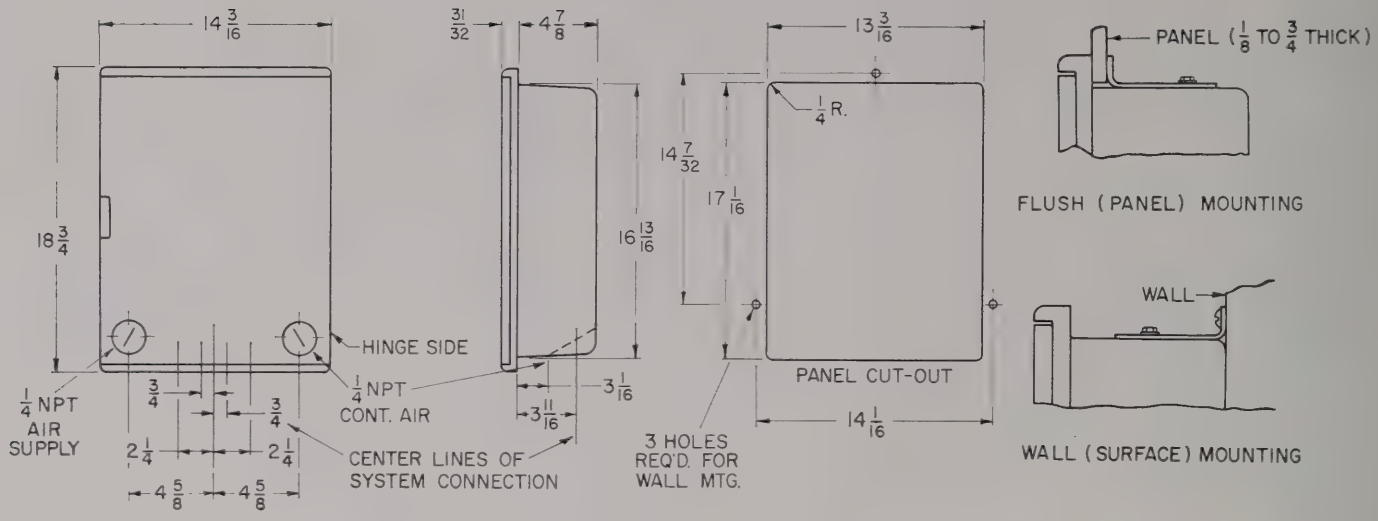

Internal View

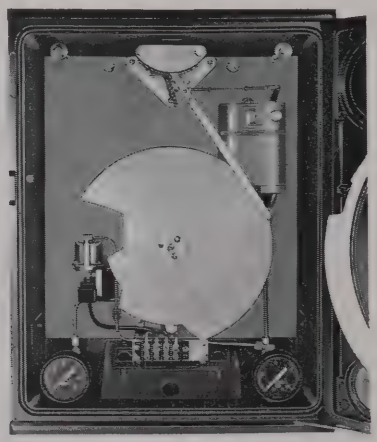

Typical Cam Program Control Installation

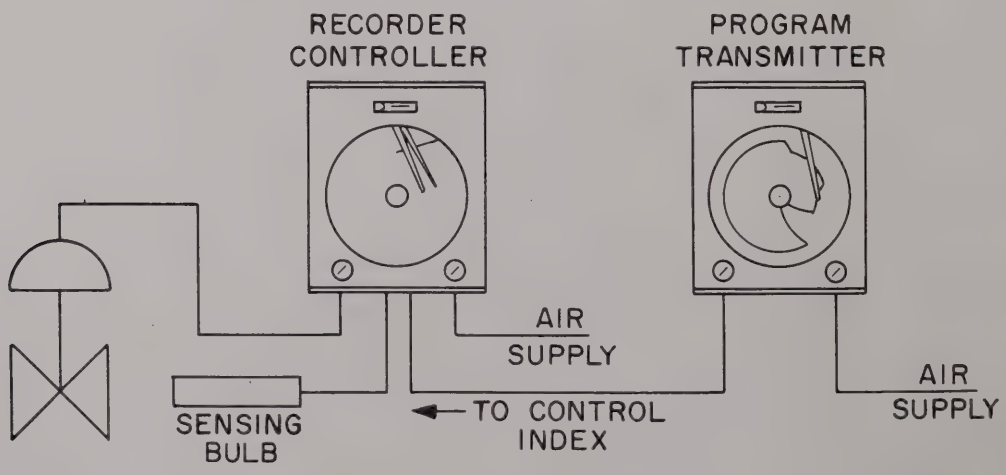

WESTON INSTRUMENTS, DIVISION OF DAYSTROM, INCORPORATED, NEWARK 12, N. J., U. S. A.

WESTON *Master II*

Universal Exposure Meter for Complete Exposure Control

Model 735
..... $31.50

A truly universal exposure meter for all photographers. Gives correct camera settings for any scene, in or out of doors. For all types of cameras and film.

Master II CINÉ EXPOSURE METER

Model 736
Ciné $31.50

For top-quality movies in color or black-and-white. Has all the features of the Universal Meter. Exposure Control Dial when preset reads directly in *f* stops.

LIGHT SCALES

The only exposure meter with separate high- and low-light scales. Move into place automatically with a simple flip of the hinged baffle.

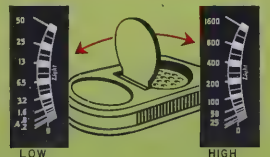

THE *Master II* IS EASY TO USE

1 **AIM** the meter at your subject and note its reading

2 **POINT** the arrow on the control dial to this reading

3 **SET** your camera. Any combination of shutter speed and f-stop opposite each other will give you correct exposure

FEATURES

Universal — for stills or movies in black-and-white or color. *Exclusive Exposure Control Dial* — shows limits of black-and-white and color film. *Light Scale*—always faces you no matter how you take a reading. *Sealed Photocell*—keeps moisture out, insures dependable performance. *High-Low Scales* — separate high and low light scales eliminate congested numbering, easy to read. *Limited Viewing Angle*—sees only what your camera sees. *Extremely Sensitive*—measures very low light as well as high brightness in daylight, tungsten or fluorescent light. *Weston Film Speeds* — always available from your dealer and *accepted* internationally as the User's Standard.

INVERCONE

Incident light? Sure — just attach the Invercone. This adapter instantly converts your Master II to read incident light. Consists of an Integrating Cone and Auxiliary Multiplier which quickly snap into place over the photocell for those shots where this method is preferred.

Invercone
Model 9925...$2.50

DIRECT **R** READING

EXPOSURE METER

for Extreme Simplicity

Model 853
only $18.00
incl. leather case

Precise Exposures... Quick and Easy

Here's the meter designed to give correct exposures with all cameras and films *quicker and easier* than ever before . . . and it's *budget priced*. You simply set your film speed, point the meter, and read the correct lens setting *direct*.

Model 2265
$7.25

WESTON PHOTOGRAPHIC THERMOMETER

Don't spoil your perfectly exposed films in the darkroom. Get this rugged thermometer for your developing tanks and graduates. Scale is indexed at 68° F. Accuracy is within 1° F over entire scale.

- **ALL METAL** — resists breakage
- **SUBMERSIBLE** — Corrosion-resistant
- **METAL FEET** — won't roll

Weston Photographic Products are manufactured by the World's largest manufacturer of precision electrical instruments.

Stop in at your favorite camera store and have the salesman show you Weston Products.

C-50-B

Printed in U.S.A.

for better pictures

WESTON

EXPOSURE METERS

- Master II Universal
- Master II Ciné
- DR Direct Reading

THE METERS *most photographers use*

COMPACT, easy to grip, and weighing less than one pound, this new pocket-size Clamp Volt-Ammeter is the ideal test instrument for electricians, engineers, motor repair shops and maintenance men.

Current measurements are safely made on insulated or uninsulated conductors up to 1″ round or 1¾″ x ⅜″ rectangular. Voltage leads with insulated clips and removable test probes are supplied, and both amperes and volts can be measured in one hook-up by a simple flip of the convenient selector switch.

The new design core magnet mechanism of Model 749 is shock mounted and utilizes spring backed jewels for sustained accuracy and long life. Rated accuracy is ±3% of full scale deflection.

only

$44.50

THE Weston Model 749 Pocket Size Clamp Volt-Ammeter is supplied in a long wearing, scuff resistant, carrying case having an individual compartment for the 5′ flexible voltage leads and three accessory test probes.

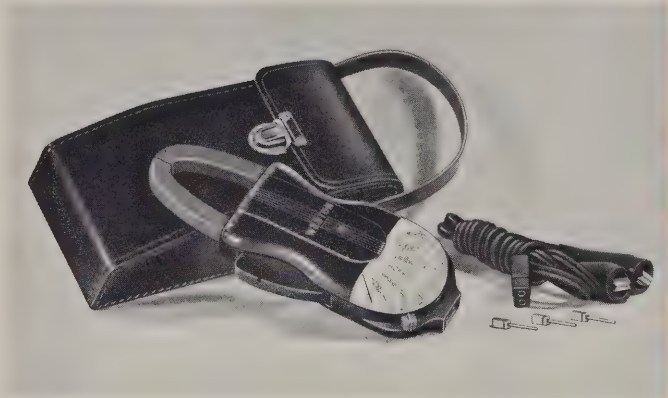

SREPCO, INC.
314 Leo Street
Dayton 4, Ohio
Phone: Michigan 3874

Cir. A-43-A

Printed in U.S.A.

NEW

WESTON

A-C *Pocket-size*

CLAMP VOLT-AMMETER

Measures A-C Current and Voltage Without Breaking Circuit

MODEL 749

CHECK THESE FEATURES

1. Precision Ground Faces Provide Positive Jaw Contact
2. Accommodates Conductors up to 1" Round or 1¾" x ⅜" Rectangular
3. Satin Finish Black Bakelite Case
4. Uses New Core Magnet Shock-Mounted Mechanism with Spring Back Jewels
5. Large, Smooth Action Trigger
6. Hand-Fitting Design—Easily Slips into Pocket
7. Fully Insulated
8. Shatter-proof Wrap-around Plastic Window
9. Bright Red Pointer for Easy Reading
10. Only One Scale for all Ranges
11. Positive Action Range Selector Switch

SIZE: 7½" X 3" X 1¼" APPROX. WEIGHT 14 OZ.

ACTUAL SIZE SCALE

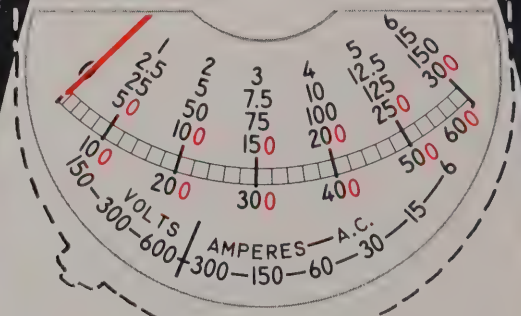

This single large scale provides readings for both amperes and volts and can be easily seen from any angle through the shatter-proof wrap-around window. The scale length is 2.36 inches.

FOUR TYPICAL USES

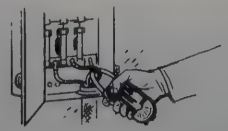

FUSE BOXES
check currents

SMALL MOTORS
oil burners, washing machines, refrigerators

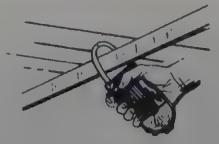

BUS BAR
current measurements

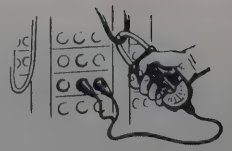

CURRENT AND VOLTAGE
tests both in one hook-up

WESTON

INDUSTRIAL ANALYZERS

Models 785-639-779-799

PORTABLE

06-207-E

INDUSTRIAL CIRCUIT TESTER

Size: 13" x 12½" x 5½" (330 x 318 x 140 mm)
Weight: with batteries, oak case, etc.; 13½ lbs. (6.13 kgs.)

Multi-Purpose — 28 Range Tester for:

- **Electronic Circuits and Equipment**
- **Communications Systems**
- **Lighting and Power Circuits**
- **Signal Systems**
- **Transformers, Loads and Wiring**

The new improved Industrial Circuit Tester combines a broad coverage of industrial measurements in one instrument. Various accessories provide change-over from one type of special measurement to another. The Model 785 Type 6B has been redesigned to make use of Vamistor® type resistance units. Made by Weston, these highly accurate precision metal film resistors are hermetically sealed and highly stable, assuring accuracy for the life of the instrument. Temperature compensation is provided in the internal circuit, permitting more accurate measurement under the severe operating conditions often encountered during field tests.

A large 4½" instrument is used, adjusted to 50 microamps full scale. It can be easily replaced from stock should it become damaged. This also applies to the a-c rectifier deck mounted on the back of the instrument.

A distinctive advantage of the Model 785 is that current and voltage ranges can be extended with accessories described on page 4.

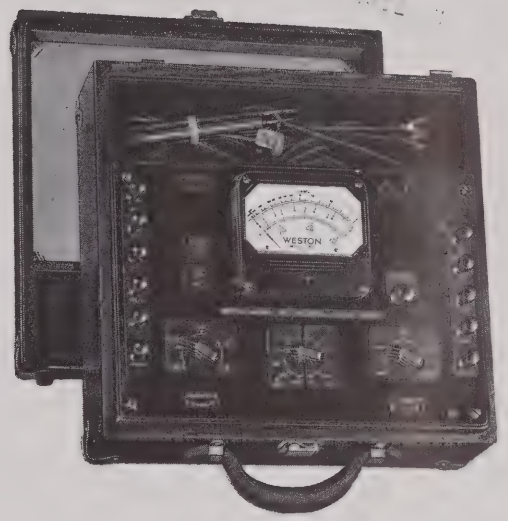

Model 785 Type 6B Industrial Circuit Tester

Application Measurements

Capacitor Leakage Measurements: The sensitive ohm ranges on Model 785 make these tests easy.

Combination Measurements: To check relay circuits for both voltage and current, it is possible to make both the current and voltage connections to the test set and by rotation of the switch, readings can be taken.

Accessories for Special Measurement

High D-C Currents:

Model 9992 100 millivolt External Shunts are available up to 500 amps. (See page 4)

High A-C Currents:

Model 605/607 Current Transformers (5 amps secondary) are available up to 1500 amps on 25-125 cps. (See page 4)

RANGES

D-C Volts . . . 20,000 Ohms per volt (Full scale range given)
100 millivolts (Separate pin jacks)
1/10/50/200/500/1000 (by switch)
Accurate within ±2% up to 500 volts, ±3% at 1000 volts

D-C Current . . . (Full scale values)
50 microamps (Separate pin jacks)
1/10/100 milliamps
1/10 amps
Accurate within ±2%

Higher ranges and full scale indication by means of 100 millivolt external shunts.

A-C Volts . . . 1000 ohms per volt
5/15/30/150/300/750
Accurate within ±3%

A-C Current . . . (Self-contained transformer)
.5/1/5/10 amps
Accurate within ±3% on 60 cps, slightly less at 125 cps

Higher ranges through the use of external current transformers.

Resistance
3,000/30,000/300,000 ohms and 3/30 megohms full scale
25/250/2,500/25,000/250,000 ohms center scale (5 ranges)
Accurate within ±2% of linear arc length on any range

Supplied complete with:
Oak or steel case, 1.5 volt battery, 15 volt battery, (2) test probes, red and black, 48" long, (2) #12 cables 5' long, Instruction Book, Registration Card.

A-C INDUSTRIAL ANALYZER

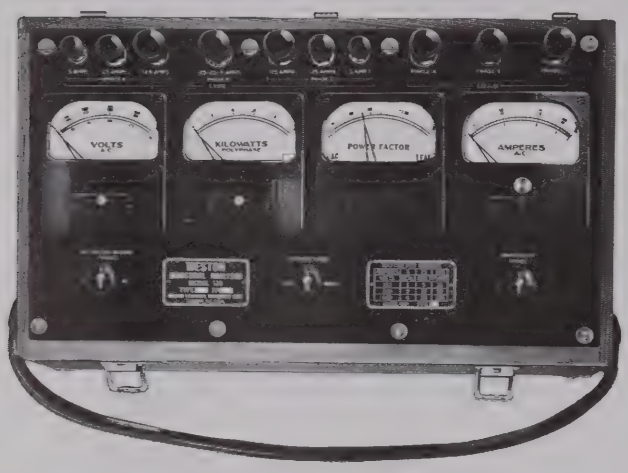

Type 2 . . . for use on 3 phase, 3 wire circuits
Type 3 . . . for use on 3 phase, 4 wire circuits
Size . . . 18⅞" x 10⅞" x 6⅞" (479 x 276 x 175 mm)
Approx. Wt.: . . . 32 lbs. (14.5 kgs.) Scale Length . . . 3.5" (89 mm)

The Weston Model 639 is a complete power analyzer which has won wide acceptance in industry among plant maintenance men . . . utility service engineers . . . electrical contractors . . . marine service men . . . and those engaged in general testing or installation work.

Model 639 is designed to analyze industrial loads by measuring a-c current, voltage and power, in single and polyphase circuits; as well as power factor in 3 phase balanced circuits. It is a compact unit arranged for maximum convenience and safety in operation, housed in a sturdy oak carrying case with removable cover.

The standard specified instrument accuracy for Type 2 on 25-125 cycle operation is shown in the tabulation on page 3, as well as the relative accuracies that can be expected on 200 and 400 cycle measurements. Special compensation is available for 200 or 400 cycle operation of any or all functions of the Model 639 Type 2 at any specified range. Correspondence is invited.

See next page for specifications of Model 639 Type 3 . . . for 3 phase, 4 wire circuits.

Features

Instruments: Four Model 610 instruments (4" x 4½"), a Voltmeter, Ammeter, Wattmeter, and Power Factor Meter are included in the sturdy oak carrying case. (Frequency Meter replaces Power Factor Meter and Kilowatts/KiloVARS Meter replaces Kilowatt Meter on Type 3.) These instruments contain the large, rugged mechanisms used in the Weston 6" instruments, and are equipped with knife edge pointers for added accuracy.

The Ammeter is equipped with an adjustable pointer stop to facilitate the rapid determination of the maximum value of starting currents. The Wattmeter has a single scale with the multiplying factors conveniently located on the instrument scale.

Safe: Internal connections eliminate possibility of "outage" due to improper connections; or damage to individual meters.

Heavy insulated binding posts are located at top away from operator. Instruments are placed along a horizontal centerline with all switches below.
The danger of interference with other equipment is minimized, due to less external wiring.

Model 639 is insulated for 1000 volt service.

Convenient . . . Saves Time: Model 639 is self-contained and all interconnections are made within the unit, thereby saving considerable time when power studies are being made . . . Only a few simple connections are necessary to place this instrument in circuit, eliminating the maze of interconnecting wires necessary when individual meters and transformers are used . . . Internal switches facilitate rapid measurement of all line currents and voltages . . . Complication of applying multiplying factors to scale readings, when using individual meters and transformers is avoided . . . Fine line scales with knife-edge pointers, and "straight-line" grouping of identical instruments, provides easy readability.

Low Burdens: Potential circuit per phase, 7 volt-amperes. Current circuit per phase, 6 volt-amperes.

High Overload Capacity: Current Circuits are designed to be used continuously at 25% above their rated values and may be subject to greater overloads for shorter periods of time.

Built-In Accuracy: Current transformers are hand wound on nickel alloy ring type cores, making it possible to maintain the phase angle and ratio errors at a minimum which is well below transformers having joints and cores of ordinary material. The overall accuracy of the Wattmeter and Power Factor Meter is maintained even at low power factors as a result of the low phase angle of the transformers.

Series resistors are well spaced throughout Model 639 to provide maximum cooling for sustained operation and accuracy.

Model 639 Type 2

Accuracy Tabulation Of 60 Cycle Type 2 Instruments At Different Frequencies

INST.	RANGE	Accuracy % of Full Scale 25-125 cycles	200 cycles	400 cycles*
AM.	All	±1	±1	+0.5 to —1.5
WATT.	All	±2	+1 to —3	0 to —4
P.F.	All	±.01 P.F.	±.02 P.F.	±.03 P.F.
Vm	600	±1	±1	0 to —2
Vm	300	±1	0 to —2	—2.5 to —4.5
Vm	150	±1	—2.5 to —4.5	—13.5 to —15.5

*Ammeters, Wattmeters and Voltmeters can be adjusted to same accuracies at 400 cycles as stated for 25-125 cycles.

Ranges . . . Type 2

Voltage . . . . . 600/300/150 volts

Current . . . . . 125/25/5 amperes

Watts . . . . 100/50/25/20/10/5/4/2/1 Kilowatts

Power Factor . . . . .30 Lag through unity to .80 Lead

Current and potential transformers may be used for extending these ranges.

On 220 volt 3-phase circuits, the 5 ampere range will take care of loads up to 1 hp on the 2 kw scale . . . on the 25 ampere range, up to 7½ hp on the 10 kw scale . . . on the 125 ampere range up to 40 hp on the 50 kw scale. At 440 or 550 volts the hp and kw ranges are doubled.

Model 639 Type 3

For Use On 3 Phase, 4 Wire Circuits

Similar in construction and performance to the Type 2 described on the preceding page, with the following differences in specifications and ranges. The Type 3 will indicate true power on 3 phase 4 wire systems even under unbalanced conditions.

Accuracy at 50-60 and 400 cycles . . . Type 3

Includes four Model 610 type instruments . . . Voltmeter, Ammeter, Wattmeter, and Frequency Meter; all with knife edge pointers.

Voltmeter . . . . . ±1% of full scale

WattVARmeter . . . . . ±2% of full scale

Frequency Meter . . . ±0.6 cycle on 50-60 cps; ±3 cycles on 400 cps

Ammeter . . . . . ±1% of full scale

Ranges . . . Type 3

Voltage . . . . . 500/250/125 volts

Current . . . 200/100/50/5 amperes nominal

Frequency . . . . . 50-60 or 400 cps only

Kilowatts/KiloVARS . . . 160/80/40/20/4/2

MODEL 779 INDUSTRIAL ANALYZER

Accuracy: a-c within 3%; d-c within 2% to 250 volts; 3% on 1,000 volt range

Size: 6⅜" x 9⅛" x 4⅞" (162 x 232 x 124 mm) Approx. Wt.: 6 lbs. (2.72 kgs.)

A compact 26 range sensitive analyzer with five d-c voltage ranges at a sensitivity of either 1,000 or 20,000 ohms per volt; five a-c voltage ranges with sensitivity of 1,000 ohms per volt. A-C voltage ranges are temperature compensated; uses Weston Vamistor® type precision resistors throughout, assuring long term instrument accuracy. Extremely low inductance and distributed capacitance of these units also permits use of the Model 779 on audio frequencies up to 10,000 cps. "Output" jack provides convenient measurement of a-c voltages superimposed on d-c. Supplied in a rugged oak case with removable cover and handy carrying handle, complete with test leads and instruction book.

Also available as Type 5A, for Telephone, Carrier Current and Transmission Line Measurements with an impedance of 600 ohms when looking into the 1 volt range. The "Output" circuit uses a larger capacitor than the Type 1B.

Model 779 Type 1B

Ranges

Volts D-C	Volts A-C	Current D-C Only	Decibels*	Ohms
2.5	2.5	.1 Ma	—14 to + 2**	0-3000
10	10	1 Ma	— 2 to +14**	0-30,000
50	50	10 Ma	+12 to +28**	0-300,000
250	250	50 Ma	+26 to +42†	0-30 Meg
1000	1000	250 Ma	+38 to +54††	
		1 Amp		
		10 Amp		

*Zero power level is based on six milliwatts in a 500 ohm line. **Substantially flat to 10,000 cycles. †Substantially flat to 3,000 cycles. ††Substantially flat to 1,000 cycles.

POCKET SIZE TESTERS

Model 799 Type S1

Model 799 Type S1 Insulation Tester

Scale: 2.375" (60.3 mm)

Size: $3\frac{3}{16}$" x $5\frac{1}{4}$" x 5" (86 x 133 x 127 mm) Approx. Wt.: 3.8 lbs. (1.7 kgs.)

For leakage measurements up to 10,000 megohms at low voltage with a maximum test potential of 50 volts d-c. A shield connection and lead are provided to eliminate error due to leakage currents. Supplied complete with (3) test leads with insulated clips, tubes, batteries and oak carrying case. Instruction Book and carrying strap also included.

Type 2 is also available, for use in explosive atmospheres.

Range: 0-10,000 megohms (Logarithmic scale)

Accessories for Weston Analyzers

Models 605/607 Current Transformers . . . Toroidal, inserted primary type, used to increase a-c current ranges of the Model 785 Circuit Tester. Type 1, accuracy better than ±1% (refer to Circular 01-405 for details), 25-125 cps, 5 amp secondary with typical ratios of 200:5, 300:5, 500:5, 1500:5.

Model 9992 100 Mv External Shunt . . . Used for extending d-c current ranges of Model 785 beyond 10 amperes. Available in 50, 100, 250 and 500 ampere capacities.

DAYSTROM, INCORPORATED
WESTON INSTRUMENTS DIVISION
614 Frelinghuysen Avenue, Newark 14, New Jersey

PRINTED U.S.A.

WESTON

Z-46
March 1960

a new type
primary standard
for measuring
AC/DC power

INTRODUCING

Model 1483

THE WESTON ELECTRONIC WATTMETER

- Transfer accuracy between DC and AC is within 0.01%
- Unprecedented versatility and reliability

CHECK THESE FEATURES:

- **NEGLIGIBLE STATIC FRICTION** between pivot and jewel bearing to affect accuracy. A small-amplitude vibration is fed constantly to the sensing element—makes possible resolutions down to .01% — 1/5 the resolution of the best indicating meter.
- **NO SPRING FATIGUE** — Springs have been eliminated.
- **TEMPERATURE COMPENSATED** — reduced self-heating errors.
- **LOW EDDY CURRENTS** — due to ferrite shields. Frequency compensated.
- **NO MUTUAL INDUCTANCE ERRORS** — The coils are oriented at 90°.
- **SUSTAINED ACCURACIES DOWN TO 10% POWER-FACTOR.**
- **ONLY ONE POTENTIOMETER** needed for DC Standardization—other wattmeters need two Type K pots, multiplying costs . . . **and errors.**
- **READ-OUT VERSATILITY** — can actuate remote indicators, digital meters; drive strip-chart recorders, integrators; used in parallel or alone.

With the development of its Model 1483 Electronic Wattmeter, Weston now brings to AC and DC power measurement a degree of accuracy which extends even beyond the traditional accuracy of Weston's indicating type dynamometer wattmeters. With quick, precise operation, the Model 1483 provides a low impedance DC output that can be measured by present day highly accurate techniques. Truly, here's a new concept in quality and capability.

For full information, contact your local Weston representative . . . or write to Daystrom, Incorporated, Weston Instruments Division, Newark 12, N. J. *In Canada: Daystrom Ltd., 840 Caledonia Rd., Toronto 19, Ont. Export: International Sales Division, 100 Empire St., Newark 12, N. J.*

A DAYSTROM UNIT

WESTON
Instruments

WORLD LEADER IN MEASUREMENT AND CONTROL

SPECIFICATIONS

Accuracy: ±0.1% of full scale input when read with potentiometer. Can be adjusted at point of use to better than ±0.05% of full scale, with adequate d-c equipment.

Input Wattages for Full Scale: 1000, 500, 250.

Input Voltages*: 200/100/50 volts normal;
300/150/75 volts maximum; 10 volts minimum.

Input Current*: 5 amperes normal.
10 amperes maximum; 50 milliamperes minimum.

Power Factor: instrument accuracy maintained down to 10% pf.

Frequency: d-c to 2500 cps.

D-C Output:

Milliamperes/ 1 ma d-c proportional to full scale value into a 0-5000 ohm load.
Millivolts/ normally 100 mv d-c, but can be provided for any value between 50 and 5,000 mv d-c.
Ground/ negative output terminal normally connected to chasis ground (other connections are possible).

Auxiliary Socket: 12 terminal plug and socket provided on back of cabinet for additional connections to all front binding posts.

Power Requirements: 105-125 a-c, 50-1600 cycles. 35 watts internally fused for 1 ampere.

Approx. Size: Steel cabinet, 20" x 14" x 10".

Approx. Weight: 27 lbs.

*For other input values correspondence is invited.

DAYSTROM, INCORPORATED, Weston Instruments Division, Newark 12, N. J., U. S. A.

PRINTED IN U.S.A.

Weston Instr.

a new type
primary standard
for measuring
AC/DC power

INTRODUCING

Model 1483

THE WESTON ELECTRONIC WATTMETER

- Transfer accuracy between DC and AC is within 0.01%
- Unprecedented versatility and reliability

CHECK THESE FEATURES:

- **NEGLIGIBLE STATIC FRICTION** between pivot and jewel bearing to affect accuracy. A small-amplitude vibration is fed constantly to the sensing element—makes possible resolutions down to .01% — 1/5 the resolution of the best indicating meter.
- **NO SPRING FATIGUE** — Springs have been eliminated.
- **TEMPERATURE COMPENSATED** — reduced self-heating errors.
- **LOW EDDY CURRENTS** — due to ferrite shields. Frequency compensated.
- **NO MUTUAL INDUCTANCE ERRORS** — The coils are oriented at 90°.
- **SUSTAINED ACCURACIES DOWN TO 10% POWER-FACTOR.**
- **ONLY ONE POTENTIOMETER** needed for DC Standardization—other wattmeters need two Type K pots, multiplying costs . . . **and errors.**
- **READ-OUT VERSATILITY** — can actuate remote indicators, digital meters; drive strip-chart recorders, integrators; used in parallel or alone.

With the development of its Model 1483 Electronic Wattmeter, Weston now brings to AC and DC power measurement a degree of accuracy which extends even beyond the traditional accuracy of Weston's indicating type dynamometer wattmeters. With quick, precise operation, the Model 1483 provides a low impedance DC output that can be measured by present day highly accurate techniques. Truly, here's a new concept in quality and capability.

For full information, contact your local Weston representative . . . or write to Daystrom, Incorporated, Weston Instruments Division, Newark 12, N. J. *In Canada: Daystrom Ltd., 840 Caledonia Rd., Toronto 19, Ont. Export: International Sales Division, 100 Empire St., Newark 12, N. J.*

A DAYSTROM UNIT

WESTON
Instruments

WORLD LEADER IN MEASUREMENT AND CONTROL

SPECIFICATIONS

Accuracy: ±0.1% of full scale input when read with potentiometer. Can be adjusted at point of use to better than ±0.05% of full scale, with adequate d-c equipment.

Input Wattages for Full Scale: 1000, 500, 250.

Input Voltages*: 200/100/50 volts normal;
300/150/75 volts maximum; 10 volts minimum.

Input Current*: 5 amperes normal.
10 amperes maximum; 50 milliamperes minimum.

Power Factor: instrument accuracy maintained down to 10% pf.

Frequency: d-c to 2500 cps.

D-C Output:

Milliamperes/ 1 ma d-c proportional to full scale value into a 0-5000 ohm load.
Millivolts/ normally 100 mv d-c, but can be provided for any value between 50 and 5,000 mv d-c.
Ground/ negative input terminal normally connected to chasis ground (other connections are possible).

Auxiliary Socket: 12 terminal plug and socket provided on back of cabinet for additional connections to all front binding posts.

Power Requirements: 105-125 a-c, 50-1600 cycles. 35 watts internally fused for 1 ampere.

Approx. Size: Steel cabinet, 20" x 14" x 10".

Approx. Weight: 27 lbs.

*For other input values correspondence is invited.

DAYSTROM, INCORPORATED, Weston Instruments Division, Newark 12, N. J., U. S. A.

PRINTED IN U.S.A.

A SIMPLER APPROACH TO INSTRUMENT CALIBRATION

WESTON *Instruments*

WESTON MODEL 60 SERIES CALIBRATORS

The Weston Model 60 Series Meter Calibrators introduce a simpler approach to instrument calibration. In the design of these consoles, the principles kept uppermost were:

1. **Simplicity of operation.**
2. **Use only of components which were the best obtainable, and which had been proved by the test of time.**
3. **Conservative component ratings to assure maximum, maintenance-free reliability.**
4. **Ability to standardize all units directly from d-c primary sources.**
5. **Constant accuracy at any point, instead of only full scale accuracy.**
6. **All rotary selector switches have silver contacts.**
7. **Voltmeter switch circuits neither open the circuit between successive points nor do they short circuit the system. The pointer of the voltmeter under test passes smoothly from one to the next, not falling to zero between points.**
8. **Equipment cannot overheat. Ample dissipation of heat is provided.**

The series includes the Model 62 a-c Ammeter Calibrator, the Model 63 a-c Voltmeter Calibrator, the Model 64 d-c Volt-Millivolt-Milliamp-Microamp Calibrator, and the Model 65 d-c Ammeter Calibrator. Each of these units is completely self-contained and independent of the others, but care is used in the phasing of the a-c units so that when ordered at the same time they can be used together to calibrate wattmeters at unity power-factor.

MODELS 62 AND 63 A-C CALIBRATORS

The reference standard for the Model 62 or 63 is a special version of the Weston Model 326 Dynamometer-type Laboratory Standard. The mechanism is mounted with the pointer in its normal horizontal position, but the end of the pointer is bent down at right angles so that it can be read against a vertical illuminated mirror-scale which consists of a hairline at top-mark only. At this one calibration point, and because the pointer movement is mechanically restricted in movement to the top 10% of the scale to avoid spring-set, calibrator accuracy can be maintained for long intervals. This single-point calibration also allows the coils of the dynamometer to be oriented at right angles to each other at this point, so that the difficulty of frequency compensation for the variable mutual inductance normally present in an indicating instrument is avoided. These monitors are frequency compensated from d-c to 1000 cycles per second.

Monitoring of the input to the control panel of the Models 62 and 63 at a fixed level, and depending for current or voltage division only on tapped transformers, enables the rated accuracy of .05% to be uniformly maintained over the entire output range without degradation.

Any load variations on the a-c calibrators are automatically corrected and the monitor maintains constant indication.

To illustrate technique of regulating for a constant current output from the regulator, refer to Fig. 2.

Transformer T_1 acts as the primary of a current transformer and also acts as an isolation transformer between the power source and the current switching network with R as a 100 W load that biases the regulator into its most stable range of operation. T_2 is another current transformer that samples the monitored current into the switching network, and monitors the heater current of a thermionic diode that acts as a control on a saturable reactor. Any tendency of the current in the secondary of T_1 to deviate from the desired value is detected by Transformer T_2 and the operating point of the thermionic diode adjusted in a direction to prevent the change.

The Model 63 A-C Voltmeter Calibrator operates in a similar fashion, but in this instance it is required that a constant voltage (refer to Fig. 3) be maintained into the voltage switching network.

Any tendency of V_B to change is accompanied by a change in V_A, which is fed back to control the filament voltage of the thermionic diode and shifts its operating point to prevent the change in V_B. If secondary B is overloaded beyond the capacity of the regulator to compensate, it becomes instantly apparent because the monitor standard will no longer maintain its set point.

The only critical element in either of the a-c calibrators is the monitor standard. However, since this a dynamometer-type instrument of the highest quality, it will maintain its accuracy for extended intervals of time. Perhaps more important, it can be standardized readily and directly from d-c primary standards without need of any intermediate transfer standards. The d-c models 64 and 65 may be used for this purpose.

MODELS 64 AND 65 D-C CALIBRATORS

The Model 64 D-C Voltmeter Calibrator, and the Model 65 D-C Ammeter Calibrator are quite different in operation from their a-c counterparts. In the d-c units, the reference standard is a Weston Standard Cell. The block diagram of the Model 64 D-C Voltmeter Calibrator is shown in Fig. 4.

Again, to illustrate the method of maintaining precise voltages at the point of test, refer to the following partial circuit diagram, Fig. 5.

The resistances of the meters being tested will have a wide range of values, and may not even be known. The meters being calibrated are in shunt with a variable number of the resistors "R." As the reference voltage is changed, the specific output tap is sampled as to voltage output and this sample compared against the reference standard voltage. Any difference in voltage between this sample and the reference standard becomes the input signal of a very stable and high-gain electronic inductronic® amplifier whose output adjusts the bias of a regulator tube in a direction as to reduce the amplifier input signal to essentially zero.

The zero-drift and resolution of the amplifier contribute no more than 0.01% to the possible output error. The sampling resistors can contribute another 0.02%. The standard cell, which is of the unsaturated variety can drift another 0.005% per year. It may therefore be seen that the rating of 0.05% applied to the output is conservative and valid over extended intervals between standardization checks.

Regulation of the Model 65 is very similar, but in this instance, precision shunts in the output circuit allow the millivolt drop across them to act as the sample to compare against the voltage reference standard. Any difference is again amplified and then used to regulate the power supply to exactly the output current required.

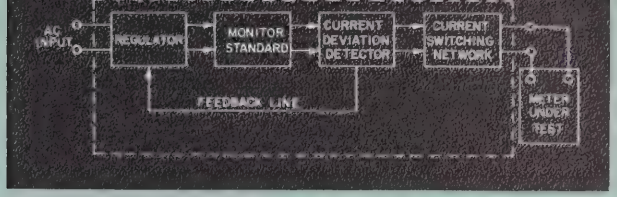

Fig. 1 — Block diagram of Model 62 A-C Current Calibrator.

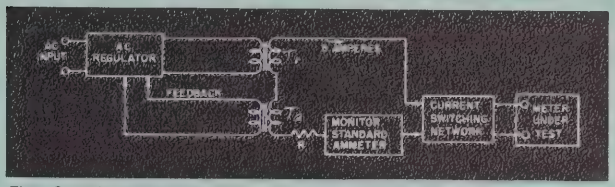

Fig. 2 — Method of control to obtain constant current output.

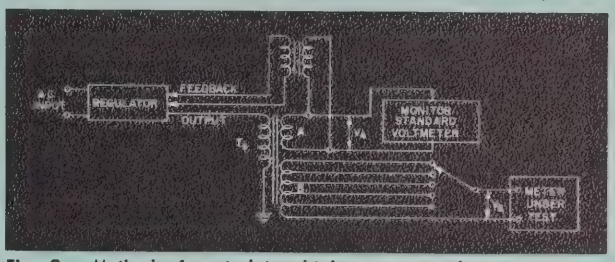

Fig. 3 — Method of control to obtain constant voltage output.

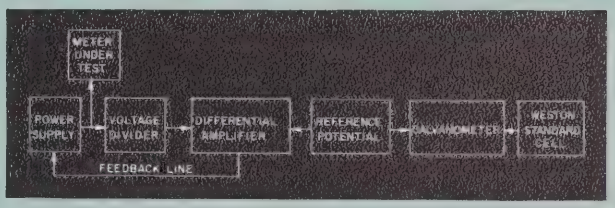

Fig. 4 — Block diagram of Model 64.

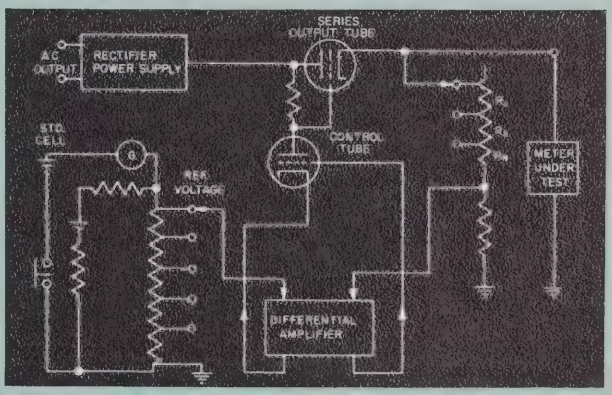

Fig. 5 — Partial circuit diagram of Model 64.

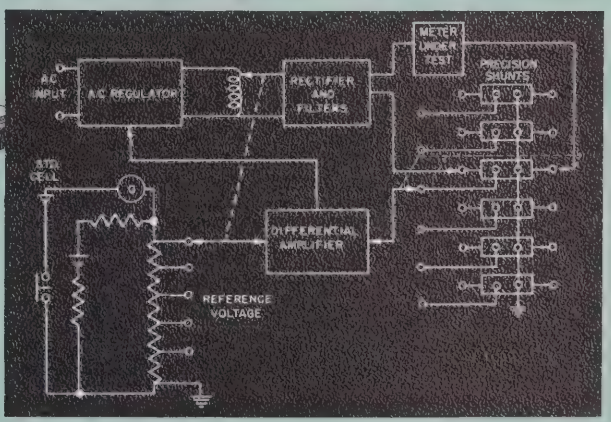

Fig. 6 — Circuit of Model 65.

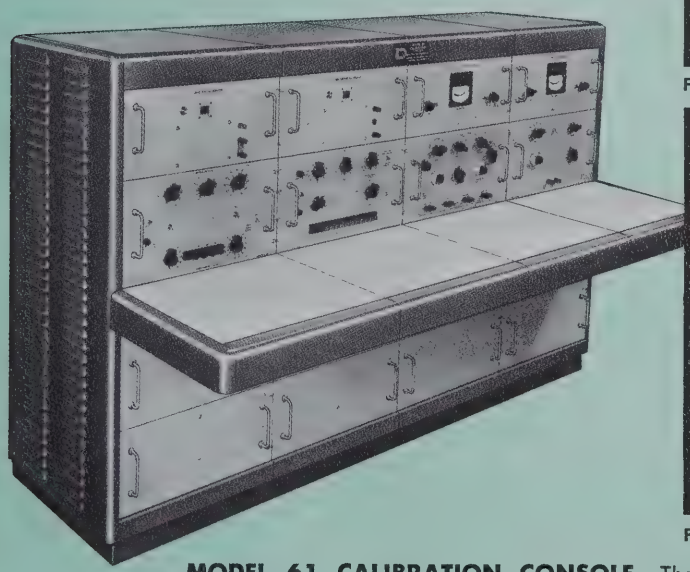

MODEL 61 CALIBRATION CONSOLE The Models 62, 63, 64 and 65 can be supplied as a unified console to a variety of configurations as required by your space and room arrangement. This group is designated as the Model 61. Correspondence is invited.

WESTON A-C AMMETER CALIBRATOR

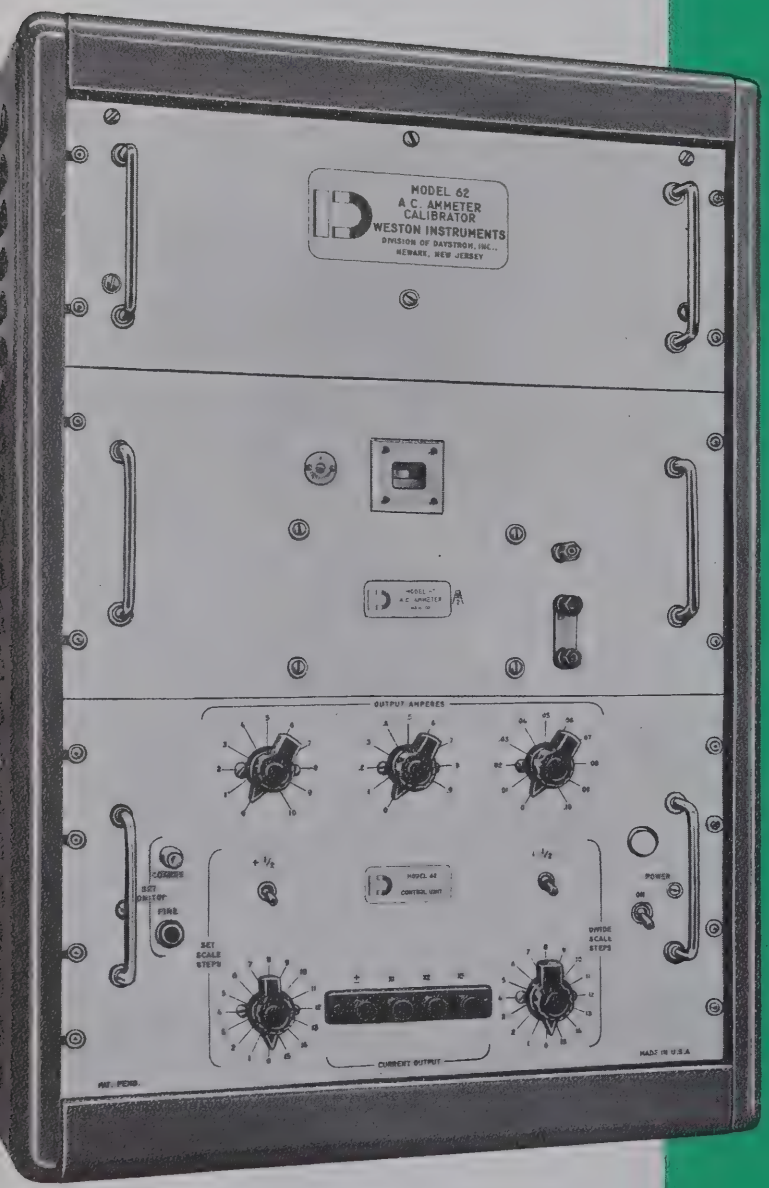

FUNCTION

Weston Model 62 semi-automatic calibrator provides a quick easy-to-use and precisely accurate method of checking or calibrating a-c ammeters, from 1 to 50 amperes full scale inclusive.

FEATURES

- ★ **scale can be subdivided into hundredths**
- ★ **calibrator will automatically divide any range into as many as 30 equally divided parts**
- ★ **no longer necessary to compute the value of each check point and then set up several pieces of equipment to obtain the required current when calibrating a-c ammeters having odd ranges to match instrument transformer ranges**
- ★ **reading accuracy is assured through the use of mirror illuminated scales and knife-edge pointer on the precision monitoring instrument**
- ★ **calibrator can also be used as a precisely regulated constant current supply**
- ★ **any load variation on the calibrator will be automatically adjusted**
- ★ **input power can be supplied from any standard 115 volt 50, 60, 400 or 1000 cycle**
- ★ **a-c source (other than 60 cycles on special order)**
- ★ **calibrator requires only one operator!**

SPECIFICATIONS

accuracy . . . 0.05% of indicated value

ranges . . . 1 through 50 amperes, subdivided into as many as 30 equal parts.

output power . . . 5 volt amperes maximum; higher burdens at slightly reduced accuracy.

power requirement . . . nominal 115 volts (105-125 volts) 50, 60, 400 or 1000 cycle a-c, 250 watts

tube complement . . . 1 each — 6L6, 6SJ7, 1236, OD3/VR150 . . . (2) 5U4

mounting . . . supplied mounted in a cabinet; can be removed from cabinet for mounting in standard 19″ rack

approx. weight . . . 160.5 lbs., 72.8 kgs.

approx. dimensions . . . 30¾″ high x 21½″ wide x 19⅛″ deep

WESTON A-C VOLTMETER CALIBRATOR

FUNCTION

Weston Model 63 calibrator has been designed to simplify the calibration of a-c voltmeters. This easy-to-use a-c voltage calibrator eliminates the necessity of calculating the value of each check point and then setting up several pieces of equipment to obtain the required voltage.

FEATURES

- **unique switching network will automatically divide range into as many as 75 to 300 parts**
- **illuminated monitor provides continuous visual check on the accuracy of the calibrator output**
- **any load variation on the calibrator will be automatically adjusted**
- **input power can be supplied from any standard 115 volt 50, 60, 400 or 1000 cycle a-c source (other than 60 cycles on special order)**
- **calibrator requires only one operator!**

SPECIFICATIONS

accuracy . . . 0.05% of indicated value

ranges . . . 1500/750/300/150/75/30/15/7.5/1.5/0.75 volts

output power . . . 100 ma through 300 volts; 5 ma at higher voltages

input power requirement . . . nominal 115 volts (105-125), 50, 60, 400 or 1000 cycle a-c, 250 watts

tube complement . . . 1 each — 6L6, 6BN6, 6SJ7, 1236, OD3/VR150 . . . (2) 5U4

mounting . . . supplied mounted in a cabinet; can be removed from cabinet for mounting in standard 19" rack

approx. weight . . . 162 lbs., 73.48 kgs.

approx. dimensions . . . 30¾" high x 21½" wide x 19⅛" deep

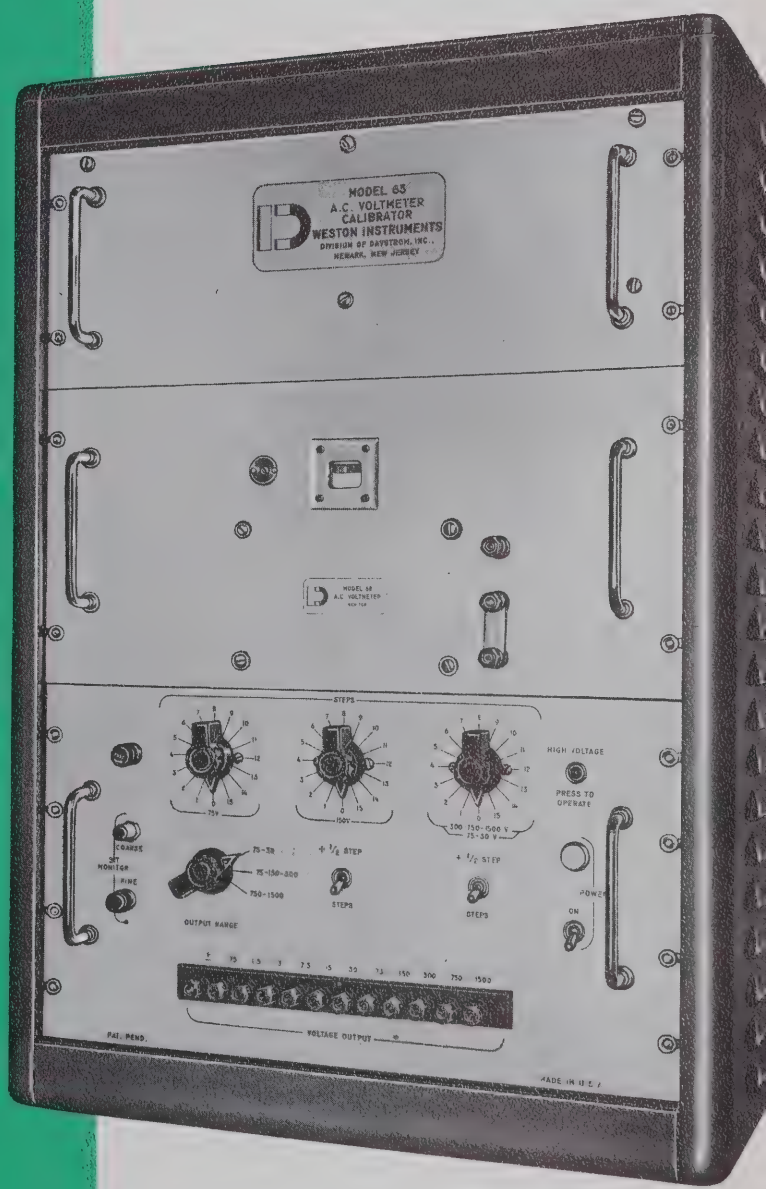

WESTON D-C VOLTMETER CALIBRATOR

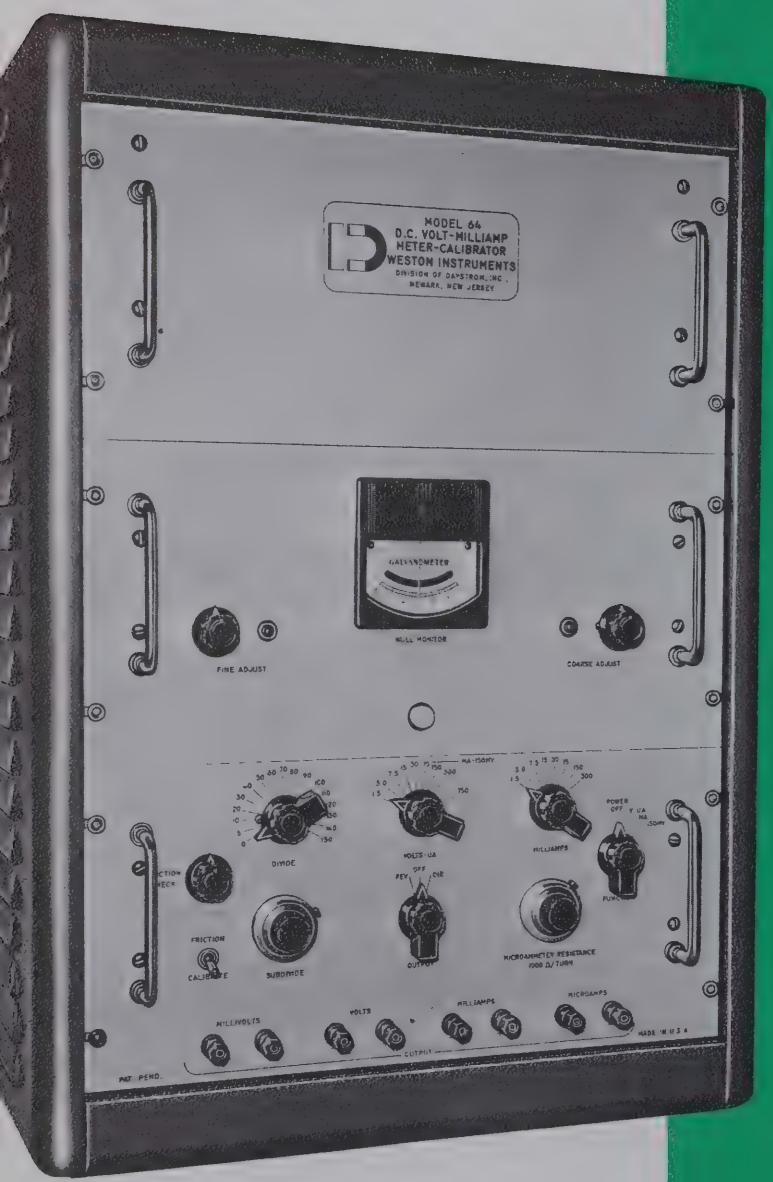

FUNCTION

Weston Model 64 Calibrator has been specifically designed to provide an easy and rapid method for precise calibration of direct current voltmeters . . . millivoltmeters . . . milliammeters . . . microammeters.

FEATURES

- ★ **any range can be automatically divided into as many as 15,000 equally divided parts**
- ★ **any drift or deviation in output voltage is instantaneously and automatically corrected**
- ★ **a reference standard (Weston Standard Cell) is provided so that calibrator can be standardized**
- ★ **semi-automatically divides each step equally regardless of the range or number of steps.**
- ★ **can be used as a precise regulated d-c source**
- ★ **rev-dir control for zero center meters**
- ★ **friction control for meter under test**
- ★ **calibrator requires only one operator!**

SPECIFICATIONS

accuracy . . . 0.05% of indicated value

ranges . . . 750/300/150/75/30/15/7.5/3/1.5 volts; 150 millivolts (with full stepping capability); 300/150/75/30/15/7.5/3/1.5 milliamperes; 750/300/150/75/30/15/7.5/3/1.5 microamperes

output extremes . . . 775 and 0.05 volts; 155 and 5 millivolts; 310 and 0.05 milliamperes; 775 and 0.05 microamperes

stepping . . . all major ranges can be divided into 15 parts and each of these can be divided into 1000 additional parts. The vernier control divides the main step span into .1% increments.

input power requirements . . . nominal 115 volts (105-125), 60 cycles a-c, 400 watts

maximum output power . . . VOLTS — 0-150 v range = 300 ma; 150-300 v range = 150 ma; 300-750 v range = 60 ma.
MILLIVOLTS — 70 ma.
MILLIAMPERES — maximum allowable load resistance varies from 125 ohm @ 300 ma to 150K ohm @ 1.5 ma
MICROAMPERES — 10,000 ohms maximum for .05% accuracy

tube complement . . . 1 each — 6SJ7, 6X5, 5NO60 Time Delay Relay, 5Y3, 6SL7, 6K6, 6H6; (2) 5R4, OA2; (3) 6BG6

mounting . . . supplied in a cabinet; can be removed from cabinet for mounting in standard 19″ rack

approx. weight . . . 130 lbs., 58.97 kgs.

approx. dimensions . . . 30¾″ high x 21½″ wide x 19⅛″ deep

WESTON D-C AMMETER CALIBRATOR

FUNCTION

Weston Model 65 semi-automatic calibrator greatly reduces the number of steps required to calibrate or check the calibration of d-c ammeters, from .75 to 30 amperes full scale inclusive.

FEATURES

- ★ **any full scale range can be divided into as many as 15,000 equal parts**
- ★ **calibrator adjusts automatically for any normal variation in line or load**
- ★ **a standard reference source (Weston Standard Cell) is provided, against which the calibrator is standardized**
- ★ **calibrator does not require calculation of each checkpoint and then setting up several pieces of equipment to provide the required current**
- ★ **calibrator requires only one operator!**

SPECIFICATIONS

accuracy . . . 0.05% of indicated value

ranges . . . 30/15/7.5/3/1.5/0.75 amperes

output extremes . . . 1 ma. and 32 amperes

stepping . . . all major ranges can be divided into 15 parts and each of these can be divided into 1000 additional parts. The vernier control can divide each of the steps on the main switch into as many as 1000 equal parts

input power requirements . . . nominal 115 volts (105-125), 60 cycle a-c, 250 watts

output power . . . from 1 volt ampere at .75 amp range to 40 volt ampere at 30 amp range

tube complement . . . 1 each — 6SL7, 6K6, 6H6, 6L6, 5Y3, 6SJ7, OD3/VR150; (2) 5U4

mounting . . . supplied mounted in a cabinet, can be removed from cabinet for mounting in standard 19″ rack

approx. weight . . . 178.5 lbs., 80.97 kbs.

approx. dimensions . . . 30¾″ high x 21½″ wide x 19⅛″ deep

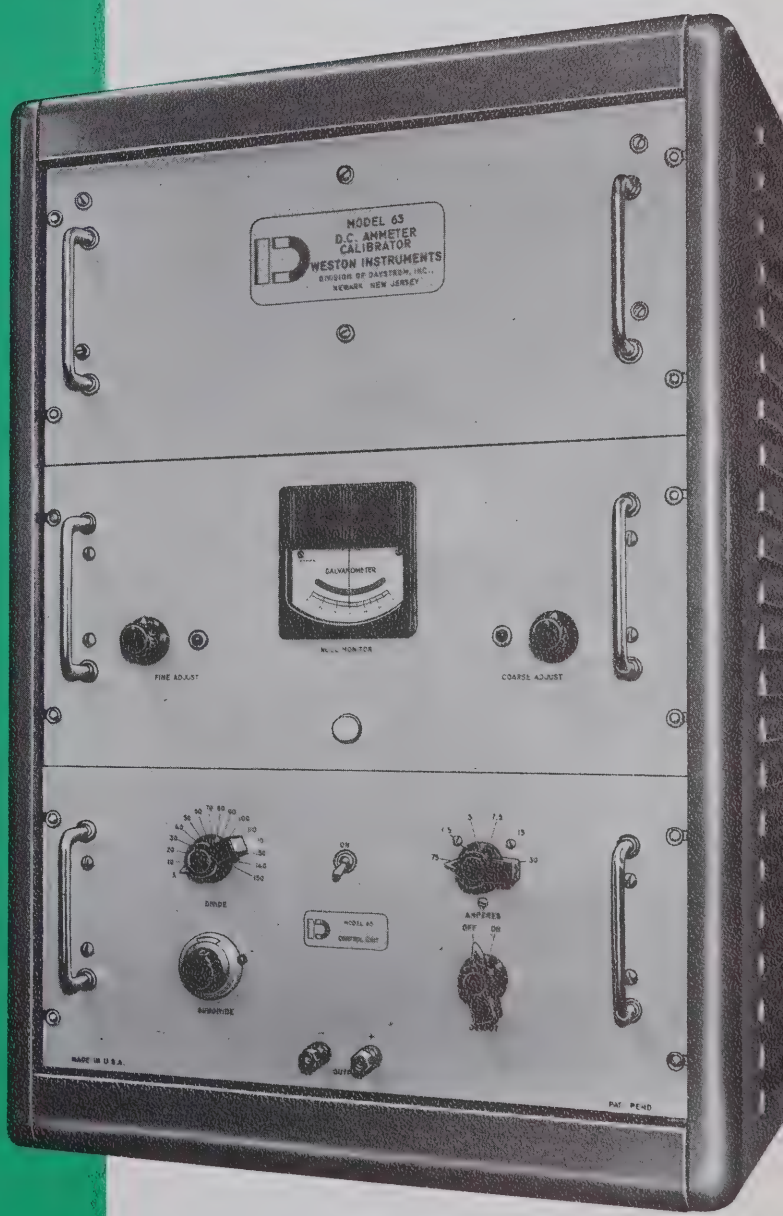

CONTROLLED TEMPERATURE BATH FOR SATURATED (NORMAL) CELLS

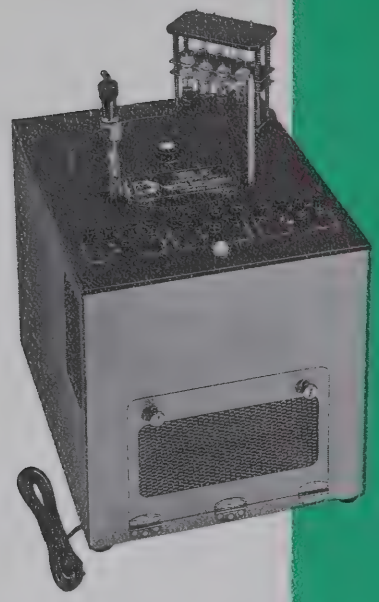

*any constant temperature can be maintained at any higher level for experimental use by adjustment of regulator.

Model 66 Controlled Temperature Bath is designed to maintain 3 banks of Weston Normal Cells at a constant temperature. The cells are immersed in a tank of neutral oil which is maintained at a constant temperature of 35 C ± 0.01 C*, therefore the output variation of the cell is held to 0.5 microvolt. Temperature is indicated by a thermometer graduated in increments of 0.02 C per division.

FEATURES

- three racks, each holding up to four cells can be accommodated
- rack carrying cases are supplied so cells can be carried to U. S. Bureau of Standards for certification
- each cell can be checked while in the bath without disturbing it
- wiring and connections from the cells to and including the binding posts are copper to prevent any errors from thermal voltages
- heater and sensitivity controls are conveniently located in front of case

SPECIFICATIONS

input power requirements.....nominal 115 volts 60 cycle a-c, 300 watts

tank capacity.....5 gallons (approx. 4 gal. of oil required for proper operation)

approx. weight (without oil).....30 lbs.

approx. dimensions.....13¾" high x 14" wide x 18" deep

WESTON STANDARD CELL COMPARATOR — MODEL 1000

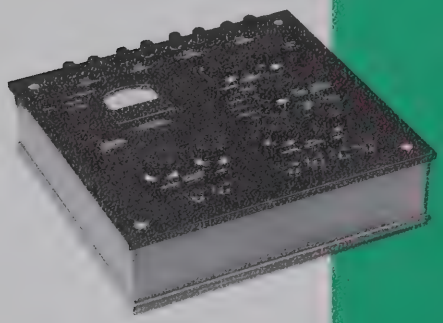

The Weston Standard Cell Comparator consists of four sets of controls and an auxiliary galvanometer mounted in a mahogany case with binding posts for connections to a series of auxiliary components.

Model 1000 is a precision instrument for measuring the voltage of an unsaturated or common form of standard cell based upon a known potential of a saturated cell. It is a specialized potentiometer wherein the voltage of a cell under test is opposed to that of a reference cell to produce a voltage difference which, when added algebraically to the reference cell voltage, indicates directly the voltage of the cell under test. The Weston Comparator displays its measured voltage to six decimal places. With a known saturated cell voltage as a reference, the Comparator will measure the open circuit voltage of any saturated or unsaturated cell in good condition to within 5 microvolts, and to within a possible limit of error of 7.5 microvolts for cells at the extreme limit of measurement.

DISTRICT OFFICES

ALBANY • BOSTON • BUFFALO • CEDAR RAPIDS • CHICAGO • CINCINNATI • CLEVELAND • DAYTON
DETROIT • HARRISBURG • HOUSTON • KNOXVILLE • LOS ANGELES • MILWAUKEE • UNION, N. J. (NEWARK)
NEW ORLEANS • NEW YORK • PHILADELPHIA • ROCHESTER • SAN DIEGO • SAN FRANCISCO • SEATTLE
SYRACUSE • WASHINGTON, D. C.

REPRESENTATIVES

AMARILLO • ATLANTA • BALTIMORE • CHARLOTTE • DALLAS • DENVER • JACKSON • JACKSONVILLE
KANSAS CITY • LITTLE ROCK • MEMPHIS • MIDDLETOWN • MINNEAPOLIS • ORLANDO • PHOENIX
PITTSBURGH • RICHMOND • SHREVEPORT • ST. LOUIS • TULSA

CANADA

MONTREAL.....Daystrom, Limited • TORONTO.....Daystrom, Limited

EXPORT AND OVERSEAS

INTERNATIONAL SALES DIVISION.....100 Empire Street, Newark 12, N. J.

DAYSTROM
WESTON INSTRUMENTS DIVISION
614 FRELINGHUYSEN AVENUE, NEWARK 12, NEW JERSEY

06-101-B 2-60

Printed in U.S.A.

FILE WESTON

05-100-C
JULY 1960

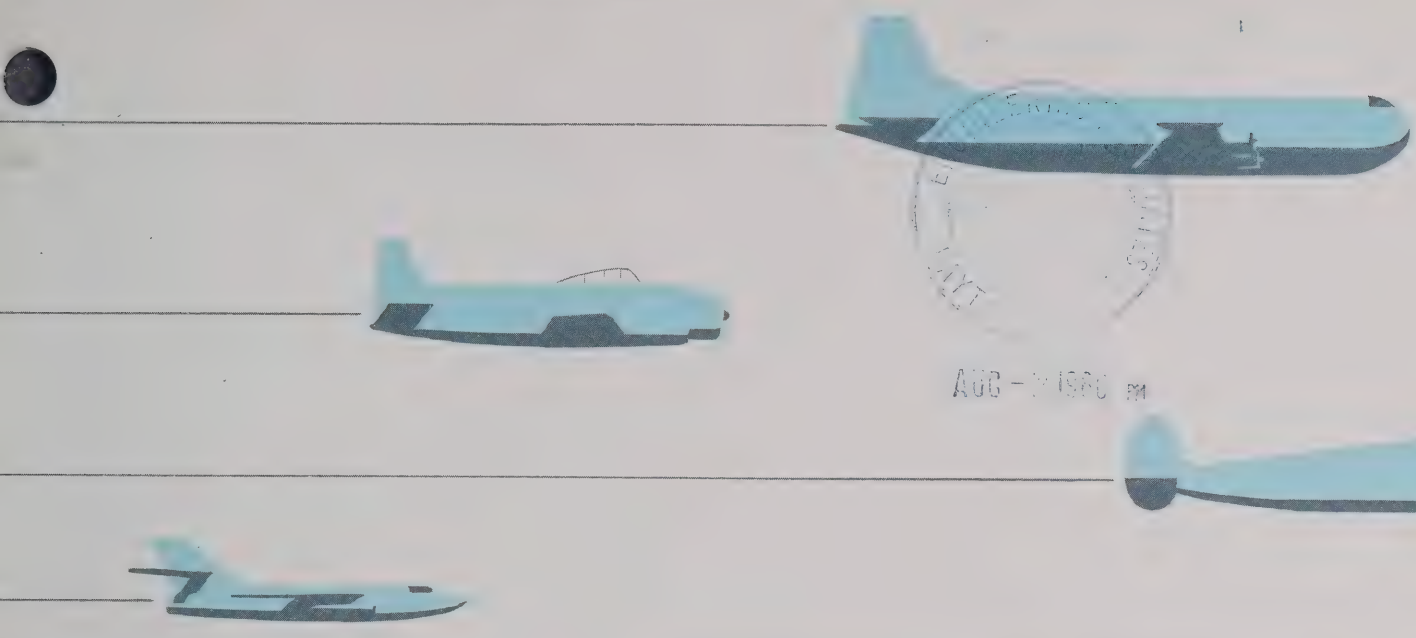

AUG - 7 1960 PM

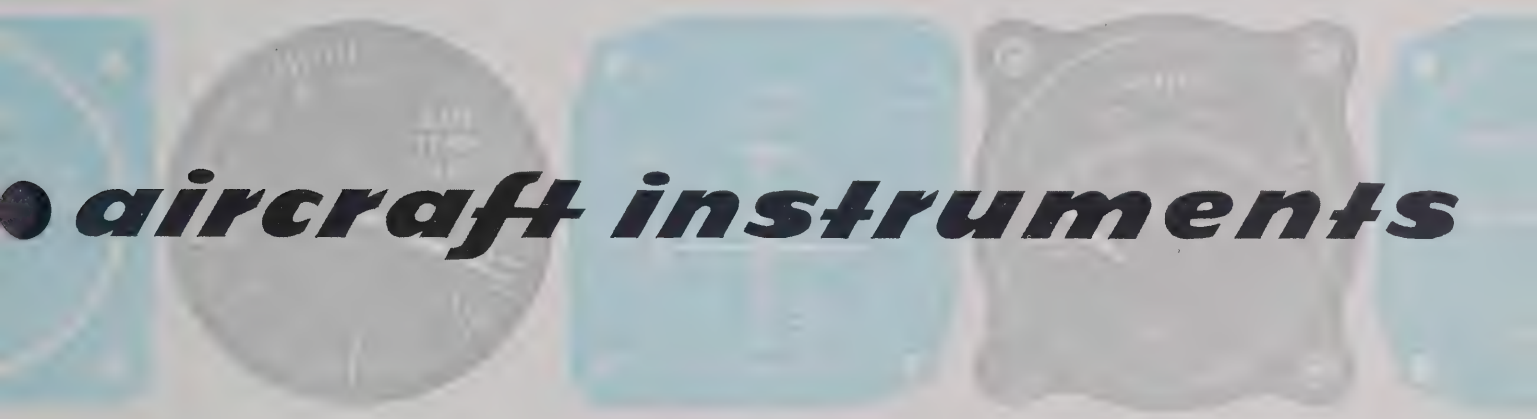

aircraft instruments

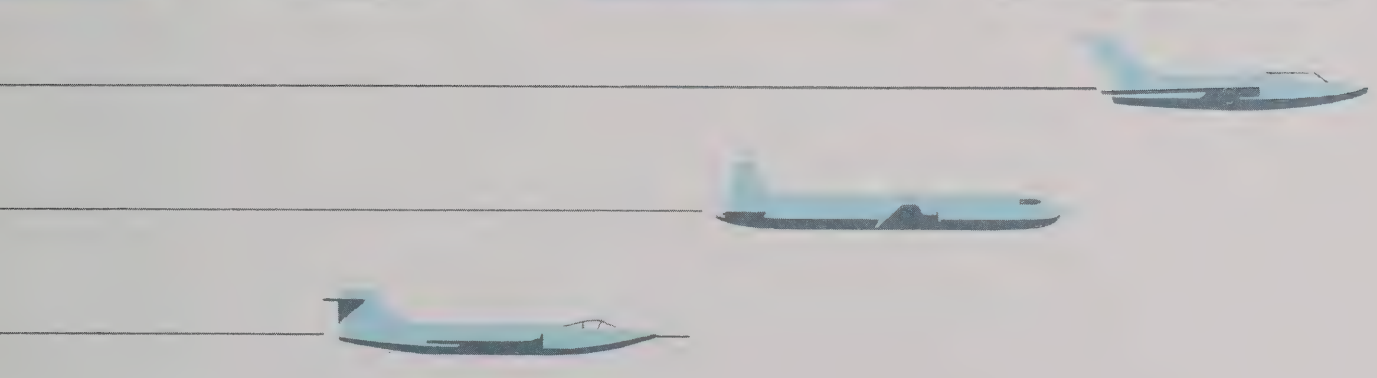

DAYSTROM

Weston Instruments Division, Newark 12, N. J., U. S. A.

WESTON *Aircraft Instruments*

Ammeters

	Page
Model 827 (Dual)	5
Model 831 (Single)	5
Model 833 (Single)	7

Voltmeters

Model 831	5
Model 833	7

Volt-Ammeters

Models 506 & 606	9

Shunts and Current Transformers

JAN and AN Shunts	13
Current Transformer	13

Resistance Thermometers

Model 727 (Single)	15
Model 728 (Single)	17
Model 828 (Dual)	19
Model 1123 (Single)	21

Resistance Thermometer Bulbs

	Page
Tubular and Flush Free Air Types	23

Thermocouple Thermometers

Model 827 (Dual)	25
Model 840 (Single)	27
Model 841 (Single)	29
Model 955 (Single)	35
Model 1121 (Single)	31
Model 1122 (Single)	33
Model 1132 (Single)	37

ILS Cross-Pointer Indicator

Model 888	39

Trim/Tab Indicators

Model 1883	41
Model 1889	41

Frequency Indicator

Model 847	11

Course Indicator

Model 1856	43

LUMINESCENT MATERIALS FOR DIALS AND POINTERS OF AIRCRAFT INSTRUMENTS

Weston Aircraft Instruments are designated by Model number, Type number, and a suffix. Such a combination completely describes the instrument as follows:

MODEL number—Covers basic design of mechanism and size.

TYPE number—Covers details such as scale range, etc.

SUFFIX letter—Denotes supplementary features such as luminescent paint specifications.

Data Sheets and Drawings usually show only MODEL and TYPE numbers. When specifying or ordering instruments, the correct SUFFIX should be added to the type number to describe the kind of luminescent paint desired. Example: Model 827 Type 14Z2. Refer to the following table.

Suffix	Luminescent Paint Description
H	White scale and pointer on Black dial.
N	Yellow Fluorescent, Spec. AN-L-1A, Color 65, and Non-Fluorescent Green Munsell, Color G 6/6. Fluorescent markings limited (Night Flight)
P1	Green Phosphorescent, AAF Spec. 14102 A, Color 61.
P2	Green Luminous Radioactive, Federal Spec. TT-R-58.
W	Black scale and pointer on White dial.
Y1	Yellow Fluorescent, Spec. AN-L-1A, Color 65.
Y2	Yellow Luminous Radioactive, Spec. AN-L-13A, Color 65.
Z1	Deep Orange Fluorescent, U.S. Radium Corp. R-410, or equal.
Z2	Deep Orange Luminous Radioactive, U.S. Radium Corp. #45 M (Was R-410-AB), or equal.

All dimensional drawings and wiring diagrams shown are subject to changes. Certified drawings will be furnished upon request.

Weston Field Offices are listed on page 2

DISTRICT OFFICES

ALBANY	5 Herbert Drive, Latham, N. Y.—STate 5-5161
BOSTON	66 Central St., Wellesley 81—CEdar 5-4300
BUFFALO 26	4446 Main St.—CIrcle 3355
CEDAR RAPIDS	213 Higley Building—EMpire 3-9304
CHARLOTTE	500 East Morehead St.—EDison 2-6135
CHICAGO 6	205 W. Wacker Dr.—FRanklin 2-4656
CINCINNATI 42	4866 Cooper Road—SYcamore 1-6360
CLEVELAND 28	3951 Lee Road—SKyline 2-3030
DAYTON 2	11 W. Monument Ave.—BAldwin 2-8164
DETROIT 21	16607 James Couzens Highway—DIamond 1-2121
GRAND RAPIDS 7	2336 Eastern Ave., S. E.—GLendale 2-4448
HARRISBURG	1511 North Front St.—CEdar 8-4276
HOUSTON 27	3405 Mercer—JAckson 6-4115
KNOXVILLE 21	2917 Sanderson Rd.—KNoxville 5-5632
LOS ANGELES 7	2001 South Grand Ave.—RIchmond 9-2361
MILWAUKEE 3	617 No. 2nd St.—BRoadway 2-1538
NEW ORLEANS 12	Nola Bldg., 407 Carondelet St.—JAckson 5-9794
NEW YORK 7	50 Church St.—WOrth 4-3510
PHILADELPHIA 4	101 N. 33rd St.—BAring 2-6458—6443—6444
PHOENIX	221 E. Camelback Road—AMherst 6-9036
PITTSBURGH 20	875 Greentree Road—WAlnut 2-4545
ROCHESTER 4	207 Burke Building, 5 Saint Paul St.—BAker 5-9546
SAN DIEGO	4455 Miramar Rd., LaJolla, Calif.—GLencourt 4-0421
SAN FRANCISCO	1125 Marshall St., Redwood City, Calif.—EMerson 9-4871
SEATTLE 4	831 Airport Way—MUtual 2-3355-6
SYRACUSE	4308 E. Genesee St., DeWitt 14, N. Y.—GIbson 6-4330
UNION, N. J. (Newark)	Route 22 & Caldwell Ave.—MUrdock 8-2020
WASHINGTON 4, D. C.	429 Pennsylvania Building, 425 13th Street, N. W.—DIstrict 7-3636

REPRESENTATIVES

AMARILLO—Butler and Land	1505 W. Tenth St.—DRake 6-5255
ATLANTA 18—E. A. Thornwell, Inc.	1537 Howell Mill Road, N.W.—TRinity 5-7895
BALTIMORE—Thomas H. Closs	21 W. Pennsylvania Ave., Towson 4, Md.—VAlley 5-4445
DALLAS 5—Butler and Land	5538 Dyer St.—EMerson 1-6631
DENVER 16—Peterson Company, Inc.	4949 Colorado Blvd.—DExter 3-5434
JACKSON—Curtis H. Stout, Inc.	706 Electric Bldg.—FLeetwood 4-4326
JACKSONVILLE—Ward Engineering Co., Inc.	2727 Phyllis St.—EVergreen 8-7656
KANSAS CITY—C. B. Fall Co.	11201 Longview Road, Hickman Mills 34, Mo.—SOuth 1-6545
LITTLE ROCK—Curtis H. Stout, Inc.	400 Shall St., P. O. Box 107—FRanklin 4-8201
MEMPHIS—Curtis H. Stout, Inc.	718 M & M Bldg.—JAckson 6-7601
MIDDLETOWN, CONN.—Dittman & Greer, Inc.	So. Main St. Extension—DIamond 6-9606
MINNEAPOLIS 3—Pinkney & Hine	1925 Nicollet Ave.—FEderal 8-0523
ORLANDO—Ward Engineering Co., Inc.	1015 W. Central Ave.—GArden 2-4295, 3-9721
SHREVEPORT—Curtis H. Stout, Inc.	409 Fairfield Bldg.—SHreveport 5-5485
ST. LOUIS 1—C. B. Fall Co.	317 N. 11th St., Suite 1001—CHestnut 1-2433
TULSA—Riddle and Hubbell Company	302 S. Cheyenne Ave., P. O. Box 727—LUther 5-5624

Canada

MONTREAL 9, P. Q.—Daystrom, Ltd.	5430 Ferrier St.—RIverside 8-8471
TORONTO 10, ONT.—Daystrom, Ltd.	840 Caledonia Rd.—RUssell 7-1114

Export and Overseas

INTERNATIONAL SALES DIVISION	100 Empire St., Newark 12, N. J.—BIgelow 8-2141

CROSS INDEX OF WESTON MODELS BY SERVICE TYPES

Service Type	Service Spec. No.	Weston Model	Weston Type	Weston Part Number	Description	Remarks
USAF A-1B	27528B	840	10N	117244	Thermocouple Temp. Ind.	
USAF A-2A	27529A	840	3N	115703	Thermocouple Temp. Ind.	
USAF A-6	21073A	841	12N	122434	Thermocouple Temp. Ind.	
USAF B-1A	27530A	827	7N	117243	Thermocouple Temp. Ind.	
USAF B-1	Mil-B-6539	9975	21A		Resistance Bulb, Flush Free Air	Replaced by MS28038-1
USAF B-1	94-32172B	301		92464	DC Voltmeter, 0-30 volts	Replaced by AN3203V30
USAF B-2	27531	827	6N	115704	Thermocouple Temp. Ind.	
USAF B-3	Mil-B-7251	9975	21B		Resistance Bulb, Flush Free Air	Replaced by MS28038-2
USAF B-4	Mil-B-7258	9975	35		Resistance Bulb, Fresh Free Air	Approval pending**
USAF B-9	94-27928-C1	841	19	130948	Thermocouple Temp. Ind.	
USAF B-17	21294	1123	4	135640	Resistance Temp. Ind.	Replaced by MS28004
USAF C-6	21069	727	101Y1	—	Resistance Temp. Ind.	No Formal Approval*
USAF C-7	21091	727	81	128847	Resistance Temp. Ind.	No Formal Approval*
USAF C-13-A	94-27328-A	2289		96362	Bimetal Thermometer, Free Air	See also MS28028
USAF C-17	27416-A	2389		97619	Bimetal Thermometer, Cabin Air	
USAF D-1	Mil-B-6595	9975	22	122688	Resistance Bulb, Heater duct	Replaced by MS28034-1
USAF D-1	Mil-T-5383	880	4	131636	Current Transformer	
USAF E-1	9432173-B	301		90595	DC Ammeter, Ext. shunt	Replaced by AN3201A300
USAF F-1	94-32284	506		116465	DC Ammeter, Ext. shunt	Replaced by AN3201A150
USAF G-1	Mil-B-7370	9975			Resistance Bulb, reinforced stem	
USAF G-1	32463	1011	2	134255	Load Meter, 500mv	
USAF G-5	21234	727	102Y1	128848	Resistance Temp. Ind.	No Formal Approval*
USAF G-6	21251	727	103Y1	128849	Resistance Temp. Ind.	No Formal Approval*
USAF G-7	21295	1123	2	132875	Resistance Temp. Ind.	Replaced by MS28008-1
USAF G-8	21296	1123	3	132876	Resistance Temp. Ind.	Replaced by MS28009-1
USAF H-1	Mil-I-6614	1123	5	135641	Resistance Temp. Ind.	Replaced by MS28039-1
USAF 1D/48	71-5014B	888	3	126801	Cross Pointer Indicator	
USAF 1D/249B	Mil-C-6234	1151	2	140192	Course Indicator	Replaced by 1D351/ARN
USAF 1D/351	Mil-I-8303	1151	3	140313	Course Indicator	Replaced by 1D351A/ARN
USAF 1D/351A	Mil-I-8303	1151	4	140314	Course Indicator	
USAF 1D/351B	Mil-I-8303	1856	1	140700	Course Indicator	Replaced by 1D351B/ARN
USAF ID/526A/ARN	Mil-I-25992	1163	3	180562	Bearing-Distance-Heading	
USAF J-1	Mil-A-5125	1011	3	128308	Load Meter, 50mv	
USAF K-3	21199	841	15	126237	Thermocouple Temp. Ind.	
USAF K-7	27332	841	18	128850	Thermocouple Temp. Ind.	
USAF K-9	Mil-I-5943	1121	6	—	Thermocouple Temp. Ind.	Replaced by MS28006-2
MJ-1	Mil-I-9343A	1122	4	157801	Long Scale Therm. Temp. Ind.	
MJ-2	Mil-I-9443A	1122	3	157800	Long Scale Therm. Temp. Ind.	
MJ-3	Mil-I-9359	1122	6	159129	Long Scale Therm. Temp. Ind.	
MJ-4	Mil-I-25026	1132	3	159871	Long Scale Therm. Temp. Ind.	
MJ-6	Mil-I-25138	1122	5	159128	Long Scale Therm. Temp. Ind.	
USAF O-1	27462A	883	6	126414	Trim Indicator	
AN3201A150	Mil-A-6752	831	4	135710	DC Ammeter, 50mv	
AN3201A300	Mil-A-6752	831	5	135713	DC Ammeter, 50mv	
AN3201A450	Mil-A-6752	831	6	135716	DC Ammeter, 50mv	
AN3201A600	Mil-A-6752	831	7	135719	DC Ammeter, 50mv	
AN3201A1200	Mil-A-6752	831	8	135722	DC Ammeter, 50mv	
AN3200	AN-S-36	9992			Shunt, 50mv	Superseded by Mil-S-61A
AN3202-1	Mil-V-6753	833	12	122419	AC Voltmeter, 0-150 volts	Superseded by MS 24332-1
AN3203V30	Mil-A-6752	831	2	135244	DC Voltmeter, 0-30 volts	
AN3203V150	Mil-A-6752	831	3	135294	DC Voltmeter, 0-150 volts	

(Continued on other side)

Service Type	Service Spec. No.	Weston Model	Weston Type	Weston Part Number	Description	Remarks
AN5525-1	Mil-B-5495	9975	19-1		Resistance Bulb	Replaced by MS28034-1
AN5525-2	Mil-B-5495	9975	19-3		Resistance Bulb	Replaced by MS28034-2
AN5536-1A	AN-I-6A	841	2N	117663	Thermocouple Temp. Ind.	
AN5536T1A	AN-I-6A	841	2N	115715	Thermocouple Temp. Ind.	
AN5536-2A	AN-I-6A	827	4N	117662	Thermocouple Temp. Ind.	
AN5536T2A	AN-I-6A	827	4N	114657	Thermocouple Temp. Ind.	
AN5780T3	Mil-P-7968	886	2	112164	Indicator position, Wheel & Flap	
AN5790-7	AN-I-34	727	104Y1	132701	Resistance Thermometer	Replaced by MS28009-1
AN5791T1	AN-I-50	1123	6	132702	Resistance Thermometer	Replaced by MS28008-1
AN5792T1	AN-I-51	1123	10	143422	Resistance Thermometer	
FSSC88I-2655	SQ-78B	827	3N	114792	Thermocouple Temp. Ind.	
MSA300	Mil-S-61A	9992		148253	Shunt, 30 amps, 50mv	MS91586-1†
MSA500	Mil-S-61A	9992		148254	Shunt, 50 amp, 50mv	MS91586-2†
MSA750	Mil-S-61A	9992		148255	Shunt, 75 amp, 50mv	MS91586-3†
MSA800	Mil-S-61A	9992		148256	Shunt, 80 amp, 50mv	MS91586-4†
MSA850	Mil-S-61A	9992		148257	Shunt, 85 amp, 50mv	MS91586-5†
MSA101	Mil-S-61A	9992		148258	Shunt, 100 amp, 50mv	MS91586-6†
MSA151	Mil-S-61A	9992		148259	Shunt, 150 amp, 50mv	MS91586-7†
MSB171	Mil-S-61A	9992		148260	Shunt, 170 amp, 50mv	MS91587-1†
MSB201	Mil-S-61A	9992		148261	Shunt, 200 amp, 50mv	MS91587-2†
MSB251	Mil-S-61A	9992		148262	Shunt, 250 amp, 50mv	MS91587-3†
MSB301	Mil-S-61A	9992		148263	Shunt, 300 amp, 50mv	MS91587-4†
MSB401	Mil-S-61A	9992		148264	Shunt, 400 amp, 50mv	MS91587-5†
MSB451	Mil-S-61A	9992		148265	Shunt, 450 amp, 50mv	MS91587-6†
MSB501	Mil-S-61A	9992		148266	Shunt, 500 amp, 50mv	MS91587-7†
MSB601	Mil-S-61A	9992		148267	Shunt, 600 amp, 50mv	MS91587-8†
MSC801	Mil-S-61A	9992		148268	Shunt, 800 amp, 50mv	MS91588-1†
MSC102	Mil-S-61A	9992		148269	Shunt, 1000 amp, 50mv	MS91588-2†
MSC122	Mil-S-61A	9992		148270	Shunt, 1200 amp, 50mv	MS91588-3†
MS24332	Mil-I-6753A	833	12	122419	A-C Voltmeter (0-150V)	
MS28004-1	Mil-I-7112	1123	9	143224	Resistance Temp. Ind.	
MS28006-1	Mil-I-7076A	1121	3	132706	Thermocouple Temp. Ind.	
MS28006-2	Mil-I-7076A	1121	4	135643	Thermocouple Temp. Ind.	
MS28007-1	Mil-I-7074	1121	5	137652	Thermocouple Temp. Ind.	
MS28008-1	Mil-I-7075	1123	7	137660	Resistance Temp. Ind.	
MS28009-1	Mil-I-7077	1123	8	137661	Resistance Temp. Ind.	
MS28028	Mil-T-6508A	2289		96450	Bimetal Thermometer, Free Air	Formerly C-13-B
MS28034-1	Mil-B-7970	9975			Resistance Bulb	
MS28034-2	Mil-B-7990	9975			Resistance Bulb	
MS28038-1	Mil-B-8598	9975			Resistance Bulb, Flush Free Air	
MS28038-2	Mil-B-8598	9975		152887	Resistance Bulb, Flush Free Air	
MS28039-1	Mil-I-6614	1123	15	152862	Resistance Temp. Ind.	
MS28039-2		1123	16	157880	Resistance Temp. Ind.	Same as MS28039-1 except scale in °F
(NAF)1091A-30	M-474	606	201	103737	Volt-Ammeter, 0-30 V, 0-30A	
(NAF)1091A-60	M-474	606	221	108213	Volt-Ammeter, 0-30 V, 0-60 A	
(NAF)1091A-120	M-474	606	244	107461	Volt-Ammeter, 0-30 V, 0-120 A	
(NAF)1091A-240	M-474	606	245	108227	Volt-Ammeter, 0-30 V, 0-240 A	
(NAF)1091A-360	M-474	606	254	107768	Volt-Ammeter, 0-30 V, 0-360 A	
(NAF)1091A-480	M-474	606	257	108195	Volt-Ammeter, 0-30 V, 0-480 A	
(NAF)1091-I-30	NAVY	9992		106388	Shunt, 30 amp, 50mv	
(NAF)1091-I-60	NAVY	9992		105918	Shunt, 60 amp, 50mv	
(NAF)1091-I-120	NAVY	9992		104290	Shunt, 120 amp, 50mv	
(NAF)1091-I-240	NAVY	9992		104291	Shunt, 240 amp, 50mv	
(NAF)1091-I-480	NAVY	9992		107030	Shunt, 480 amp, 50mv	

* Offered as commercial equivalent only.

†Supersedes types per JAN-S-61 and AN types of same range

AMMETERS AND VOLTMETERS—MODEL 831
DUAL AMMETER—MODEL 827

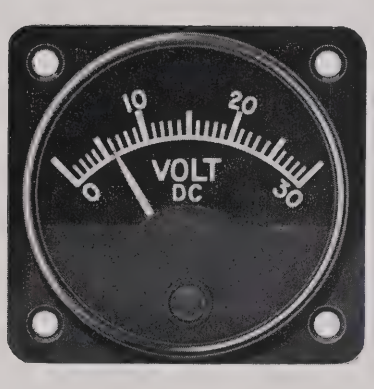

Model 831 Voltmeter

Model 827 Dual Ammeter

SPECIFICATIONS

Design: Instruments are of the permanent magnet moving coil type. Voltmeters generally have a current loss of 1 milliampere, and due to low power consumption the danger of burn-out resulting from high overload is minimized.

Ammeters for use with external shunts operate on lower than ordinary currents minimizing the danger of burn-out due to overload and also reducing the effect of variation in lead resistances. Nominal voltage loss is 50 millivolts.

Model 831—Standard 1⅞" aircraft case (MS 33548) —Single

Model 827—Standard 2¾" aircraft case (MS 33550) —Dual

Model 827 can be supplied as a Volt-Ammeter.

Black background on dial

Magnetically shielded

Voltmeters up to 150 volts are self-contained

Ammeters are adjusted for use with 50 mv external shunts. Shunt prices shown on D-567.

Shunt Leads: 0.5 ohm resistance

Approx. Weight: Model 831:10 oz. (.29 kg)
Model 827:18 oz. (.52 kg)

MOUNTING INFORMATION

Suitable for front or rear panel mounting

Tinnerman Nuts #A8943-632-24G and mounting screws #6-32 x 1" suitable for rear panel mounting are supplied with the indicator.

Connections to threaded studs on rear of instrument

Weston Type	Service Type	Scale Ranges
	Model 831 Voltmeters	
2	AN3203V30	0-30
3	AN3203V150	0-150
11	. . .	15-30
	Model 831 Ammeters-Single	
4	AN3201A150	0-150
5	AN3201A300	0-300
6	AN3201A450	0-450
8	AN3201A1200	0-120
7	AN3201A600	0-600
	Model 827 Ammeters-Dual	
19	. . .	20-0-150
18	. . .	20-0-200
16	. . .	30-0-300
20	. . .	40-0-400

Pointer and Dial treated with Green Phosphorescent, Yellow Fluorescent, or Deep Orange Fluorescent. Radioactive Green, Yellow, or Deep Orange is at a surcharge.

Scale ranges listed above are standard, and should be used when possible. Other scale ranges, however, can be supplied if necessary.

(Continued on other side)

INSTALLATION

Cut a hole in the instrument panel for the indicator case, and drill mounting holes in accordance with dimensions given on the applicable diagram below. When instrument is mounted from the rear of the panel, Tinnerman Nuts may be used. For front panel mounting, a suitable screw and nut is necessary.

Wire in accordance with the appropriate diagram below. Make sure all connections are clean and tight.

DIMENSIONAL AND WIRING DIAGRAMS

(Note: Dimensions in parentheses are millimeters)

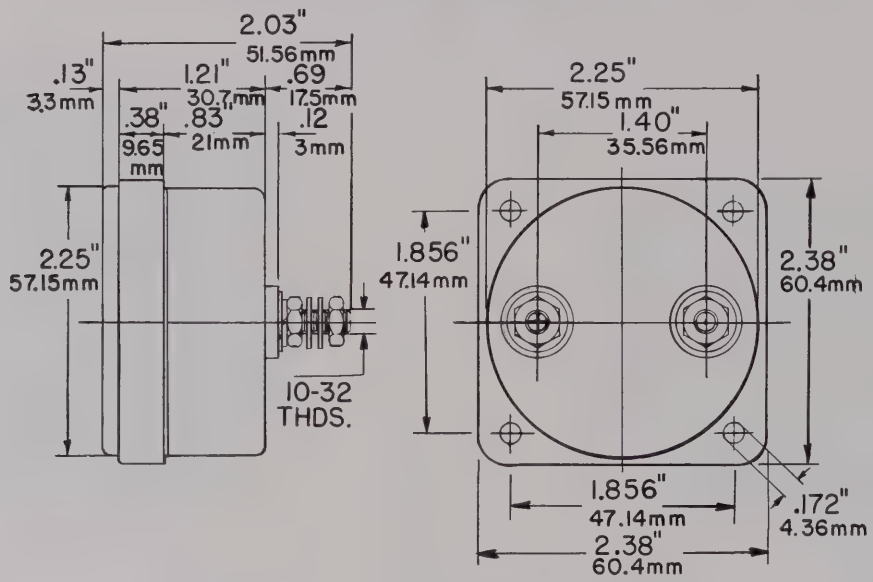

Model 831 D. C. (Ammeter and Voltmeter)

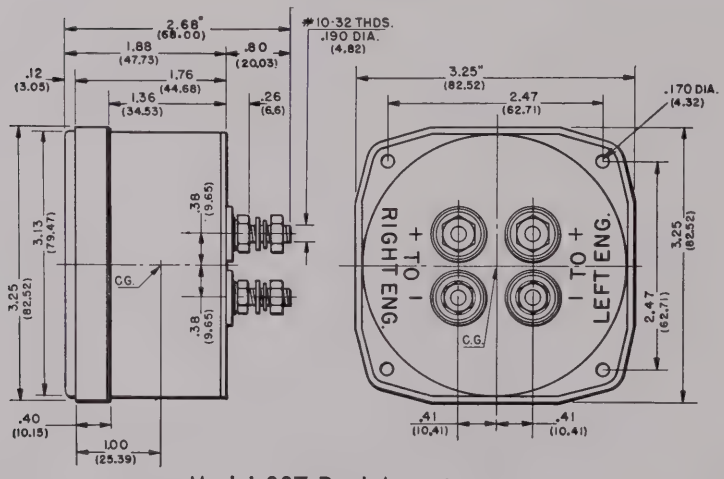

Model 827 Dual Ammeter

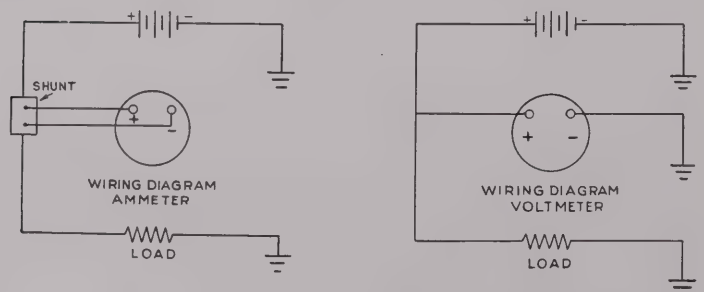

Model 831 Wiring Diagram

Light Weight Type Shunts . . . Refer to Page 13

AMMETERS AND VOLTMETERS—MODEL 833

SPECIFICATIONS

Design: Instruments are of the radial vane type (moving iron), providing excellent readability over a large portion of the scale range. They are ordinarily calibrated for operation at normal frequency of 400 cycles. Special calibration and adjustment for higher frequency operation can be made. Correspondence is required.

Standard 1⅞" aircraft case (MS 33548)

Black background on dial

Voltmeters up to 250 volts are self-contained

Ammeters up to 50 amperes are self-contained. Above 50 amperes, use with Model 880 Current Transformers having 1 ampere secondary output. Refer to page 11.

Transformer Leads: Resistance 0.5 ohm maximum.

Approx. Weight: 10 oz (.29 kg)

MOUNTING INFORMATION

Suitable for front or rear panel mounting

Tinnerman Nuts #A8943-632-24G and mounting screws #6-32 x 1" suitable for rear panel mounting are supplied with the indicator.

Connections to threaded studs on rear of instrument

Weston Type	Service Type	Scale Ranges
	Ammeters	
11	. . .	0-75
10	. . .	0-150
8	. . .	0-200
	Voltmeters	
13	. . .	0-150
12	MS24332-1	0-150
9	. . .	0-250

Pointer and Dial treated with Green Phosphorescent, Yellow Fluorescent, or Deep Orange Fluorescent. Radioactive Green, Yellow, or Deep Orange is at a surcharge.

Scale ranges listed above are standard, and should be used when possible. Other scale ranges, however, can be supplied if necessary.

(Continued on other side)

INSTALLATION

Cut a hole in the instrument panel for the indicator face, and drill mounting holes in accordance with dimensions given on wiring diagrams below. When instrument is mounted from the rear of the panel, Tinnerman Nuts may be used. For front panel mounting, a suitable screw and nut is necessary. Wire in accordance with the appropriate diagram below. Make sure all connections are clean and tight.

DIMENSIONAL AND WIRING DIAGRAMS

(Note: Dimensions in parentheses are millimeters.)

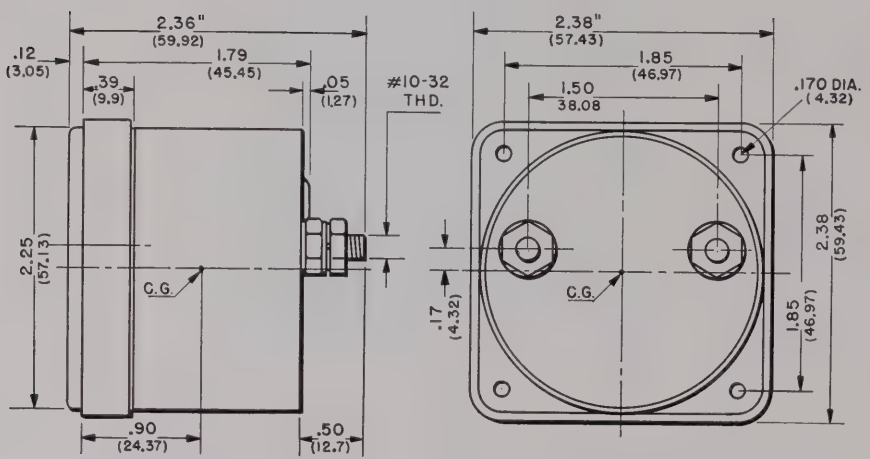

Model 833 (Ammeter and Voltmeter)

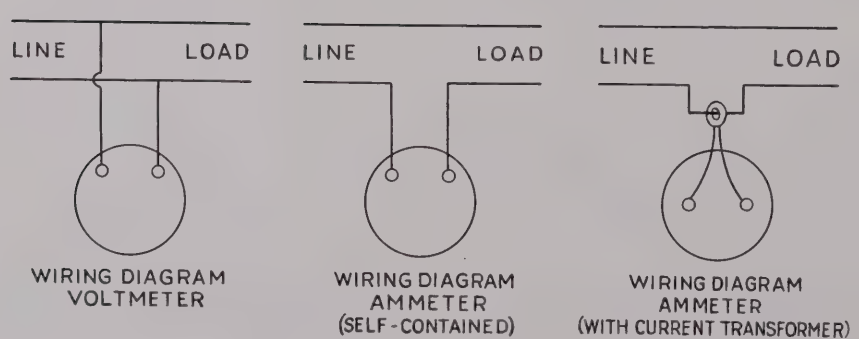

Model 833

Current Transformers . . . Refer to Page 13

VOLT-AMMETERS—MODELS 506 and 606

Direct Current Type

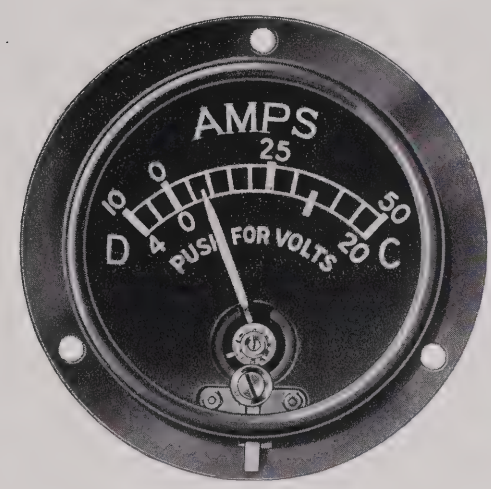

Model 506 Volt-Ammeter

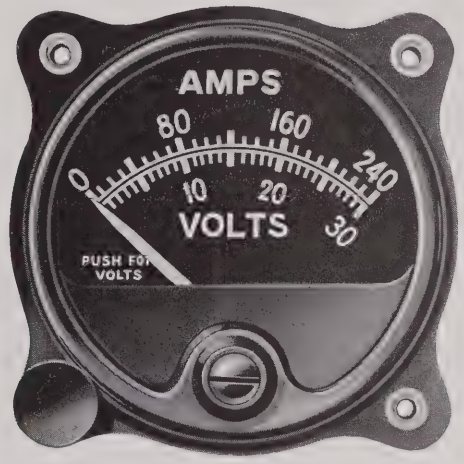

Model 606 Volt-Ammeter

SPECIFICATIONS

Design: Instruments are of the permanent magnet moving coil type. Models illustrated normally give current indications, a push button switch is provided for voltage indications.

Model 506—Std. 2-1/16" dia. Flush Type Metal Case

Model 606—Standard 1⅞" aircraft case

Black background on dial

Voltage ranges are self-contained

Magnetically shielded

Current ranges when not self-contained are adjusted for use with 50 mv external shunts

Shunt leads: Model 506: 0.1 ohm Model 606: 0.05 ohm

Approx. Weight: Model 506: 7 oz (0.2 kg)
Model 606: 9.6 oz (0.27 kg)

MOUNTING INFORMATION

Suitable for rear panel mounting

Connections to threaded studs on rear of instrument

Model 506: Mounting holes adapted for use of #4 thd. mounting screw

Model 606: Mounting lugs equipped with #6-32 thd. self-locking insert nuts

Weston Type	Service Type	Scale Ranges	
	Model 506		
		Volts	Amperes
122	. . .	15-0-15	30-0-30*
123	. . .	4-0-20	10-0-50*
124	. . .	25-0-25	50-0-50*
125	. . .	5-0-25	10-0-50*
126	. . .	4-0-30	10-0-75†
121	. . .	2-0-30	10-0-150†
	Model 606		
201	NAF-1091-A-30	30	30†
221	NAF-1091-A-60	30	60†
244	NAF-1091-A-120	30	120†
245	NAF-1091-A-240	30	240†
257	NAF-1091-A-480	30	480†

*Voltage and current ranges are self-contained.

†Current ranges require external shunts (Refer to Page 11). Voltage ranges are self-contained.

Pointer and Dial treated with Green Phosphorescent, Yellow Fluorescent, or Deep Orange Fluorescent. Radioactive Green, Yellow, or Deep Orange is at a surcharge.

Scale ranges listed above are standard, and should be used when possible. Other scale ranges, however, can be supplied if necessary.

(Continued on other side)

INSTALLATION

Cut a hole in the instrument panel for the indicator face, and drill mounting holes in accordance with the dimensions given on diagrams below. Wire in accordance with the appropriate wiring diagram. Make sure all connections are clean and tight.

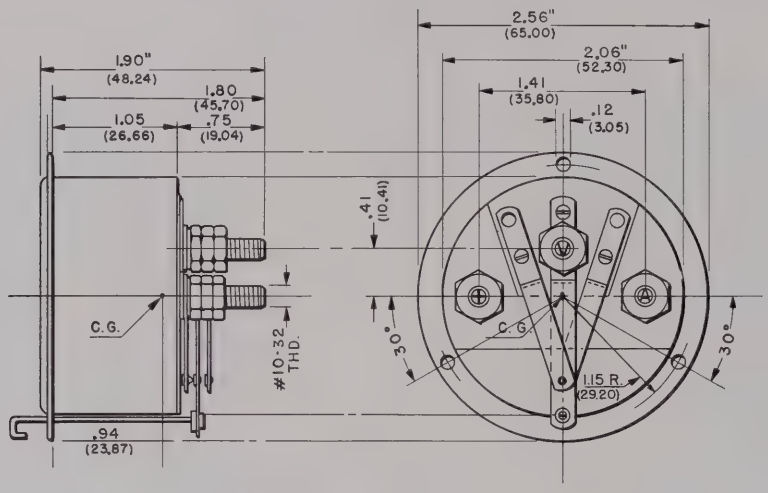

Model 506 Volt-Ammeter

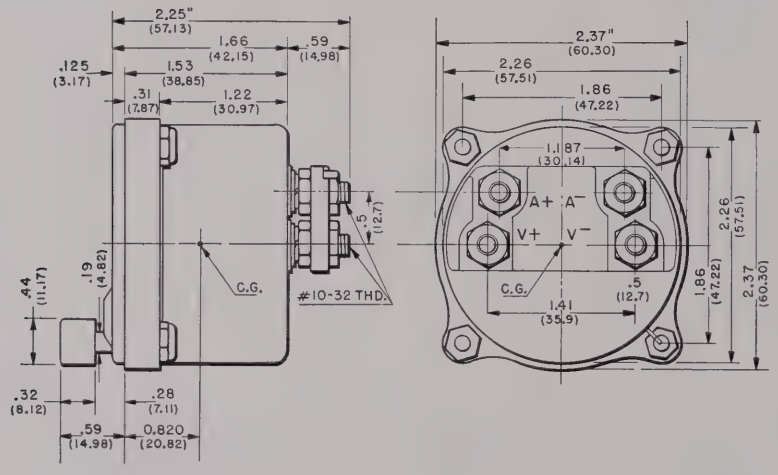

Model 606 Volt-Ammeter

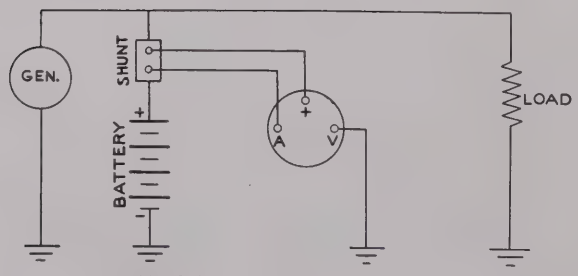

Model 506 Wiring Diagram

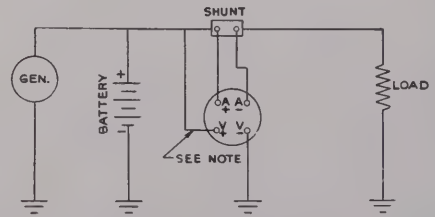

NOTE: Use of single-pole multi-position switch provides facility for point-to-point voltage check for isolation of line faults (switch not shown).

Model 606 Wiring Diagram

Light Weight Type Shunts . . . Refer to Page 13

FREQUENCY INDICATOR–MODEL 847

SPECIFICATIONS

Design: Instrument is of the iron core dynamometer type and is normally supplied for operation from a 120 volt, 400 cycle source. It can be furnished for use with other combinations of voltage and frequency on special order. Accuracy ±5% of included range.

One of the outstanding features of this instrument is the almost negligible effect of variations in supply voltage upon the accuracy of indication, this effect being less than 2% change in indication based on the mid-frequency reading for a 10% voltage change.

This instrument can also be supplied with calibration in R.P.M.

Standard 2¾" aircraft case (MS 33550)

Black background on dial

Magnetically shielded
Radio shielded

Approx. Weight: 23 oz (.65 kg)

MOUNTING INFORMATION

Suitable for front or rear panel mounting

Tinnerman Nuts #A8943-632-24G and mounting screws #6-32 x 1" suitable for rear panel mounting are supplied with the indicator.

Connections to threaded studs on rear of instrument

Type	Scale Ranges
5	350/400/450

Pointer and Dial treated with Green Phosphorescent, Yellow Fluorescent, or Deep Orange Fluorescent. Radioactive Green, Yellow, or Deep Orange is at a surcharge.

(Continued on other side)

INSTALLATION

Cut a hole in the instrument panel for the face of the indicator, and drill four mounting holes in accordance with the dimensions given on the diagram below. No special instructions are necessary for the wiring of this instrument. Leads to the meter should be shielded with conduit as a protection against radio interference. Make sure all connections are clean and tight.

DIMENSIONAL AND WIRING DIAGRAMS

(Note: Dimensions in parentheses are millimeters.)

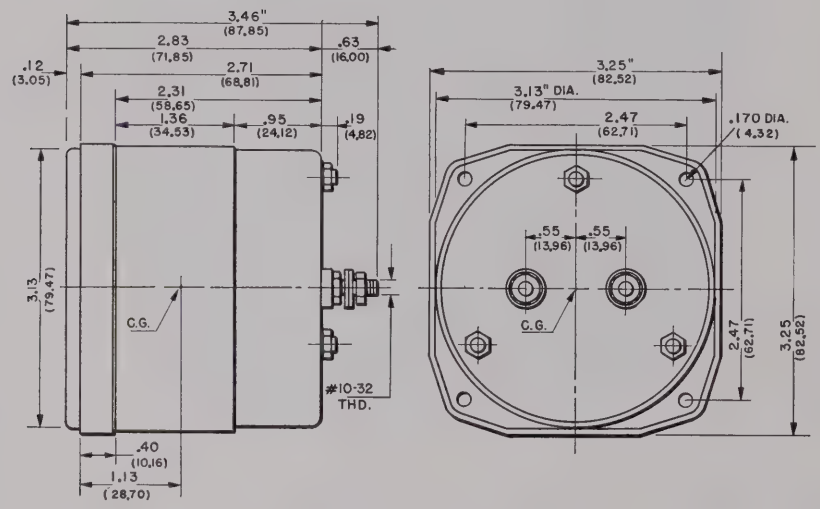

Model 847 Frequency Indicator

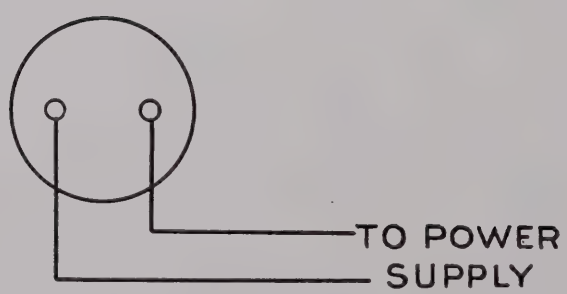

Wiring Diagram

SHUNTS AND CURRENT TRANSFORMERS

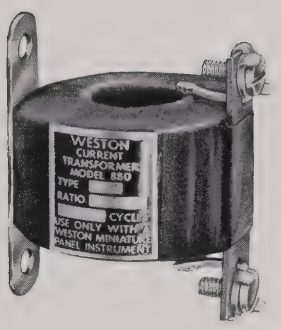

Model 880 Type 6

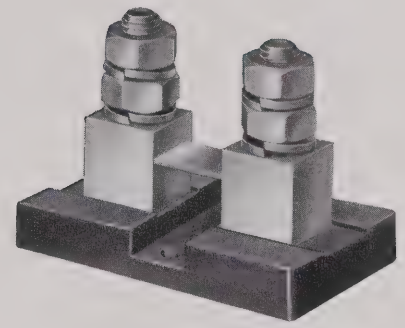

Model 9992 Light Weight Type Shunt

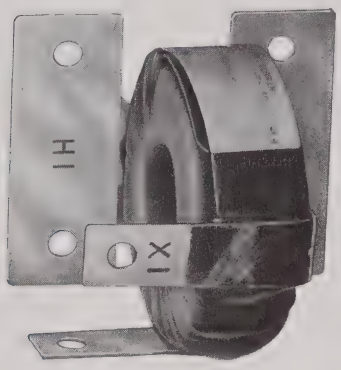

Model 880 Types 3 and 4

MODEL 9992 LIGHT WEIGHT TYPE SHUNTS

Design: Manufactured to conform dimensionally and electrically to Military Specification MIL-S-61A. They are specifically designed to be light in weight in comparison with shunts conventionally used on stationary switchboards.

Since these shunts are small and light in weight, the area provided for convection cooling is considerably below normal, therefore the greater part of the cooling effect is by conduction back into the line leads. These leads should have at least the cross-sectional area necessary to carry full rated load in still air without overheating.

50 mv drop at rated current

Approx. Weight: Refer to table on reverse side

MODEL 880 TYPE 6 CURRENT TRANSFORMER

Design: Transformer is of the inserted-primary type. Contains silicon steel core. Light in weight.

Provided with mounting bracket

Permissible burden is approximately 1 Volt-Ampere at 350 to 1000 cycles which permits its use with a Model 833 Ammeter with scale per C.T. Ratio and an adjustment of 0-1 ampere

Secondary connections are made by means of connection block

Approx. Weight: 9 oz (0.26 kg)

MODEL 880 TYPES 3 and 4 CURRENT TRANSFORMERS

Design: Transformer is of the inserted-primary type. Contains a nickel-steel core. Designed essentially for use with wattmeters.

Phase angle errors are so small as to be considered negligible

Permissible burden is approximately 2 Volt-Amperes at 400 cycles which permits series connection of ammeter and current coils of wattmeter for simultaneous indications

Secondary connections are made to convenient terminals

Provided with mounting bracket

Approx. Weight: 8 oz (0.23 kg)

MODEL 880 TYPES 3, 4 and 6

Weston Type	CT Ratio
3-0501	50:1
3-0751	75:1
3-2001	200:1
3-2502	250:2
3-3001	300:1
4 (USAF Type D-1)	250:2
6-0301	30:1
6-0501	50:1
6-0751	75:1
6-1001	100:1

(Continued on other side)

DIMENSIONAL DIAGRAMS

(Note: Dimensions in parentheses are millimeters)

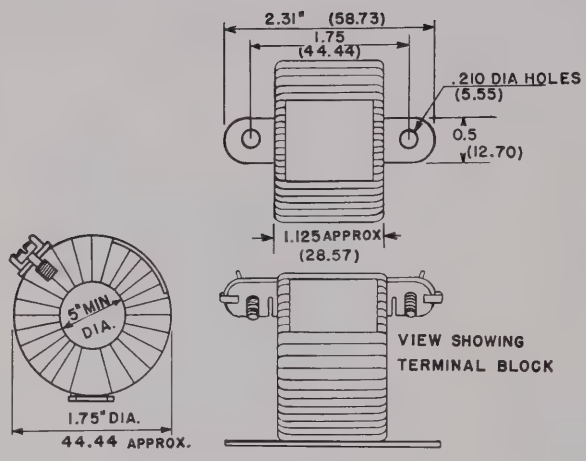

Model 880 Type 6 Current Transformer

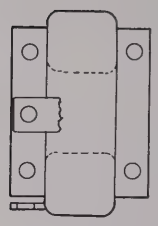

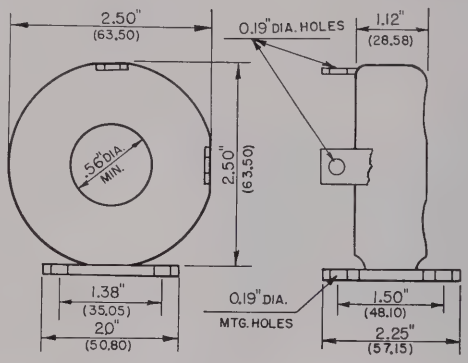

Model 880 Types 3 and 4 Current Transformers

Model 9992 MS Aircraft Shunts

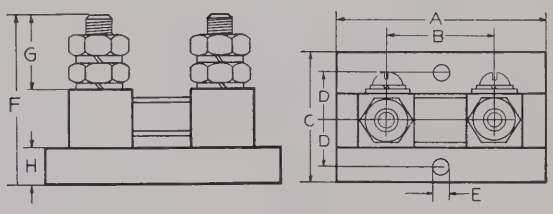

Fig. 1

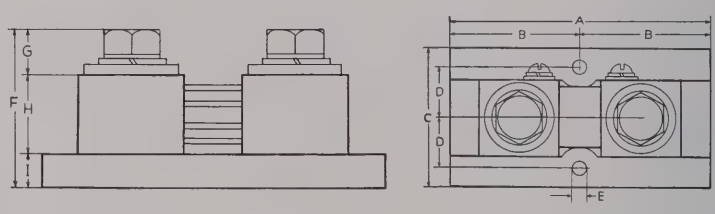

Fig. 2

Range-Amps	Type No.	* Spec.	Weston Part No.	Fig.	Dimensions in Inches									Approx. Wt.	
					A	B	C	D	E	F	G	H	I	oz	kg
30	MSA-300	MS	148253	1	2.00	1.00	1.25	.437	.205	1.688	.625	.563	—	3	.09
50	MSA-500	MS	148254	1	2.00	1.00	1.25	.437	.205	1.688	.625	.563	—	3	.09
75	MSA-750	MS	148255	1	2.00	1.00	1.25	.437	.205	1.688	.625	.564	—	3	.09
80	MSA-800	MS	148256	1	2.00	1.00	1.25	.437	.205	1.688	.625	.563	—	3	.09
85	MSA-850	MS	148257	1	2.00	1.00	1.25	.437	.205	1.688	.625	.563	—	3	.09
100	MSA-101	MS	148258	1	2.00	1.00	1.25	.437	.205	1.688	.625	.563	—	3	.09
150	MSA-151	MS	148259	1	2.00	1.00	1.25	.437	.205	1.688	.625	.563	—	3	.09
170	MSB-171	MS	148260	2	3.25	1.625	1.75	.625	.205	1.78	.468	.750	.563	12	.36
200	MSB-201	MS	148261	2	3.25	1.625	1.75	.625	.205	1.78	.468	.750	.563	12	.36
250	MSB-251	MS	148262	2	3.25	1.625	1.75	.625	.205	1.78	.468	.750	.563	12	.36
300	MSB-301	MS	148263	2	3.25	1.625	1.75	.625	.205	1.78	.468	.750	.563	12	.36
400	MSB-401	MS	148264	2	3.25	1.625	1.75	.625	.205	1.78	.468	.750	.563	12	.36
450	MSB-451	MS	148265	2	3.25	1.625	1.75	.625	.205	1.78	.468	.750	.563	12	.36
500	MSB-501	MS	148266	2	3.25	1.625	1.75	.625	.205	1.78	.468	.750	.563	12	.36
600	MSB-601	MS	148267	2	3.25	1.625	1.75	.625	.205	1.78	.468	.750	.563	12	.36
800	MSC-801	MS	148268	2	4.50	2.25	2.50	1.25	.205	2.13	.563	1.00	.563	31	.89
1000	MSC-102	MS	148269	2	4.50	2.25	2.50	1.25	.205	2.13	.563	1.00	.563	31	.89
1200	MSC-122	MS	148270	2	4.50	2.25	2.50	1.25	.205	2.13	.563	1.00	.563	31	.89

* MS Shunts are made per MIL-S-61A which supercedes both AN and JAN types.

RESISTANCE THERMOMETERS — MODEL 727

Cylinder . . . Carburetor . . . Oil . . . Free Air . . . Coolant

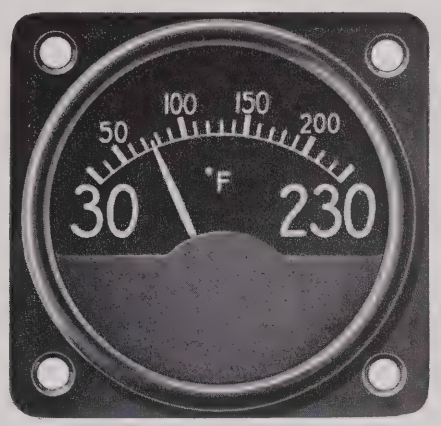

SPECIFICATIONS

Design: Instrument is of the moving coil ratiometer type and is, therefore, little affected by voltage changes, thus making it preferable to the conventional bridge type instrument. Furthermore, the magnetic flux available with this Weston permanent magnet moving coil system is sufficiently high to produce the required torque necessary to accommodate scale ranges having a fairly low temperature span.

Standard 1⅞" aircraft case (MS 33548)

Black background on dial

Operating Voltage: 12 and 24 volts d-c

Magnetically shielded

Radio shielded

Approx. Weight: 16 oz. (0.46 kg.)

MOUNTING INFORMATION

Suitable for front or rear panel mounting

Tinnerman Nuts #A8943-632-24G and mounting screws #6-32 x 1" suitable for rear panel mounting are supplied with the indicator.

Use Plug No. AN-3106-14s-2S or Weston Part No. 93853

Use with Weston Resistance Thermometer Bulbs, Part No. 112638 or 112639 (AN 5525-1 or AN 5525-2).

Connection Leads: The instrument is adjusted for a nominal lead resistance (bulb to instrument) of 0.16 ohm. The electrical connectors are adapted to #20 AWG copper wire. Lead lengths frequently approach 100 double feet, which in #20 AWG copper wire is approximately 2 ohms of resistance. The wiring as illustrated (note location of ground connection) distributes the lead resistance in the instrument circuit, so as to make the effect of lead resistance a minimum.

Weston Type	Scale Ranges
62	20/0/120°F
70	50/0/130°F
61	30/160°F
60	30/230°F
*82	0/600°F
65	50/0/50°C
†104	70/0/150°C
101	70/0/50°C
81	20/0/260°C
64	0/70°C
63	0/150°C
*83	0/300°C
*84	50/0/300°C

*These Cylinder Temperature Indicators are adjusted for use with bayonet type resistance bulb AN 5546-1.

†Rotated 90° counterclockwise.

Pointer and Dial treated with Green Phosphorescent, Yellow Fluorescent, or Deep Orange Fluorescent. Radioactive Green, Yellow, or Deep Orange is at a surcharge.

Scale ranges listed above are standard, and should be used when possible. Other scale ranges, however, can be supplied if necessary.

(Continued on other side)

INSTALLATION

Cut a hole in the instrument panel for the indicator case, and drill four holes for mounting in accordance with dimensions shown in the diagram below. Mount the resistance bulb, by means of the threads provided on the bulb body, at the point where the temperature is to be measured. It will be noted from the wiring diagrams shown below, that two connecting wires from the resistance bulb to the instrument are used, regardless of the fact that the system is grounded. This eliminates possible apparent resistance changes in the bulb circuit, resulting from introduction of voltage drops across poorly bonded structural members.

Wire the bulb to the indicator, using #20 AWG copper wire to connect the resistance bulb in the circuit. If more than one resistance bulb is used, necessitating the use of a suitable switch, make connections as shown in the switch wiring diagram.

Make sure all connections are clean and tight.

DIMENSIONAL AND WIRING DIAGRAMS

(Note: Dimensions in parentheses are millimeters.)

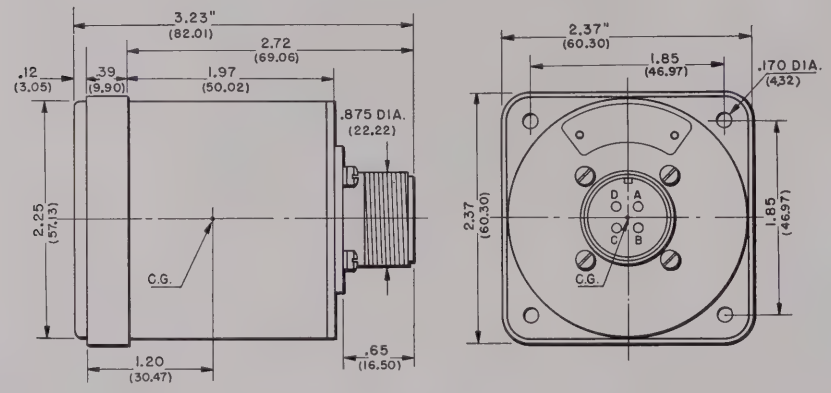

Model 727 Thermometer

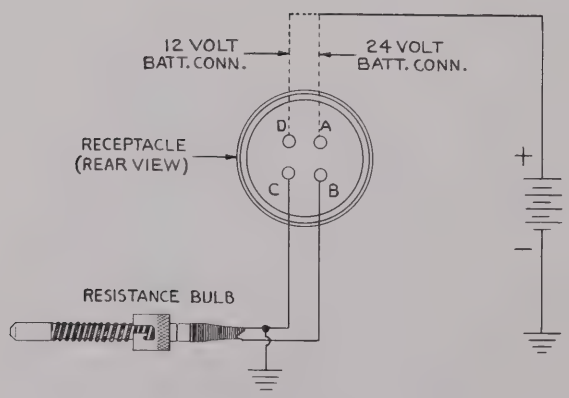

Single Bulb Wiring Diagram

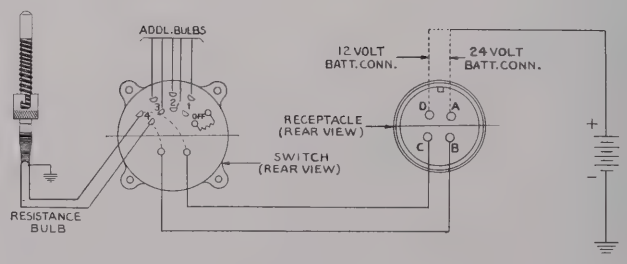

Switch and Multiple Bulb Wiring Diagram

Use pin "D" for 12 volts and pin "A" for 24 volts (+ connection). Leave odd pin disconnected.

Resistance Thermometer Bulbs . . . Refer to Page 23

RESISTANCE THERMOMETER—MODEL 728

Cylinder . . . Carburetor . . . Free Air . . . Cabin

SPECIFICATIONS

Design: Instrument is of the moving coil ratio meter type and is, therefore, little affected by voltage changes, thus making it preferable to the conventional bridge type instrument. Furthermore, the magnetic flux available with this Weston permanent magnet moving coil system is sufficiently high to produce the required torque necessary to accommodate scale ranges having a fairly low temperature span.

Standard 2¾" aircraft case (MS 33550)

Black background on dial

Operating Voltage: 12 and 24 volts d-c

Magnetically shielded

Radio shielded

Approx. Weight: 22.4 oz (.64 kg)

MOUNTING INFORMATION

Suitable for front or rear panel mounting

Tinnerman Nuts #A8943-632-24G and mounting screws #6-32 x 1" suitable for rear panel mounting are supplied with the indicator.

Use Plug No. AN-3106-14s-2S (Weston Part No. 93853)

Use with Weston Resistance Thermometer Bulbs, Part No. 112638 or 112639 (AN 5525-1 or AN 5525-2).

Connection Leads: The instrument is adjusted for a nominal lead resistance (bulb to instrument) of 0.16 ohm. The electrical connectors are adapted to #20 AWG copper wire. Lead lengths frequently approach 100 double feet, which in #20 AWG copper wire is approximately 2 ohms of resistance. The wiring as illustrated (note location of ground connection) distributes the lead resistance in the instrument circuit, so as to make the effect of lead resistance a minimum.

Type	Scale Ranges
34	20/0/120°F
39	60/0/120°F
*42	0/600°F
35	50/0/50°C
*44	50/0/300°C
*43	0/300°C

*These Cylinder Temperature Indicators are adjusted for use with bayonet type resistance bulb AN 5546-1.

Pointer and Dial treated with Green Phosphorescent, Yellow Fluorescent, or Deep Orange Fluorescent. Radioactive Green, Yellow, or Deep Orange is at a surcharge.

Scale ranges listed above are standard, and should be used when possible. Other scale ranges, however, can be supplied if necessary.

(Continued on other side)

INSTALLATION

Cut a hole in the instrument panel for the indicator case, and drill four holes for mounting in accordance with dimensions shown in the diagram below. When the instrument is mounted from the rear of the panel, Tinnerman Nuts may be used. For front panel mounting, a suitable screw and nut is necessary.

Mount the resistance bulb by means of the threads provided on the bulb body, at the point where the temperature is to be measured. It will be noted from the wiring diagrams shown below, that two connecting wires from the resistance bulb to the instrument are used, regardless of the fact that the system is grounded. This eliminates possible apparent resistance changes in the bulb circuit, resulting from introduction of voltage drops across poorly bonded structural members.

Wire the bulb to the indicator, using #20 AWG copper wire, to connect the resistance bulb in the circuit. If more than one resistance bulb is used, necessitating the use of a suitable switch, make connections as shown in the switch wiring diagram. Make sure all connections are clean and tight.

DIMENSIONAL AND WIRING DIAGRAMS

(Note: Dimensions in parentheses are millimeters.)

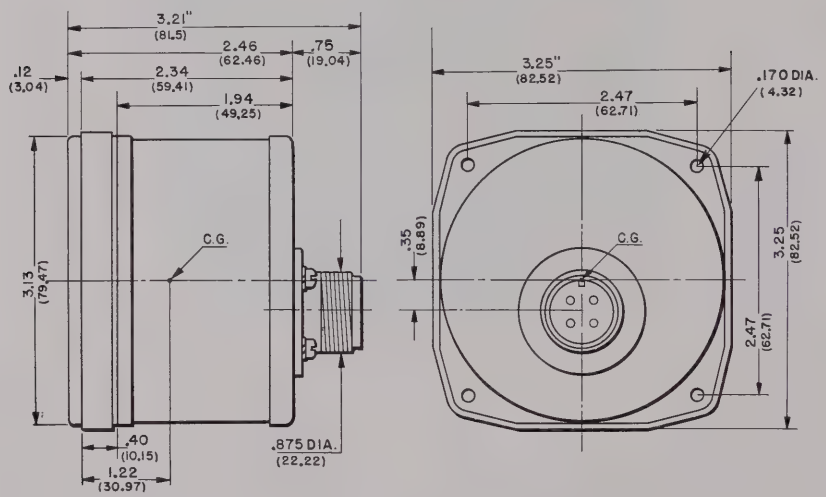

Model 728 Resistance Thermometer

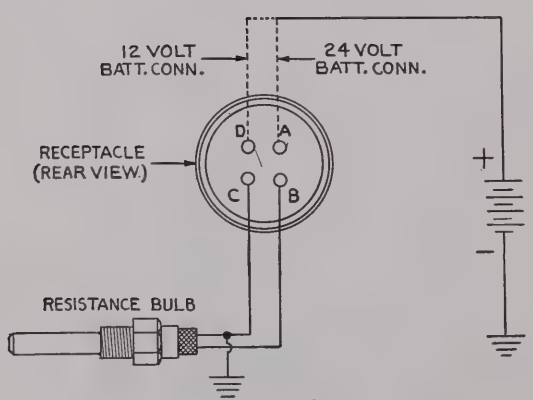

Single Bulb Wiring Diagram

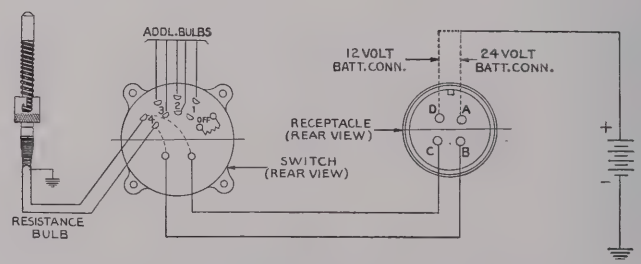

Switch and Multiple Bulb Wiring Diagram

Use pin "D" for 12 volts and pin "A" for 24 volts (+ connection). Leave odd pin disconnected.

Resistance Thermometer Bulbs . . . Refer to Page 23

DUAL RESISTANCE THERMOMETER — MODEL 828

Cylinder . . . Carburetor . . . Oil . . . Coolant

SPECIFICATIONS

Design: Instrument is of the moving coil ratiometer type and is, therefore, little affected by voltage changes, thus making it preferable to the conventional bridge type instrument. Furthermore, the magnetic flux available with this Weston permanent magnet moving coil system is sufficiently high to produce the required torque necessary to accommodate scale ranges having a fairly low temperature span.

Standard 2¾" aircraft case (MS 33550)

Black background on dial

Operating Voltage: 12 or 24 volts d-c (Specify when ordering)

Magnetically shielded

Radio Shielded

Approx. Weight: 26 oz. (0.74 kg.)

MOUNTING INFORMATION

Suitable for front or rear panel mounting

Tinnerman Nuts #A8943-632-24G and mounting screws #6-32 x 1" suitable for rear panel mounting are supplied with the indicator.

Use Plug No. AN-3106-14s-5S

Use with Weston Resistance Thermometer Bulbs, Part No. 112638 or 112639 (AN 5525-1 or AN 5525-2).

Connection Leads: The instrument is adjusted for a nominal lead resistance (bulb to instrument) of 0.16 ohm. The electrical connectors are adapted to #20 AWG copper wire. Lead lengths frequently approach 100 double feet, which in #20 AWG copper wire is approximately 2 ohms of resistance. The wiring as illustrated (note location of ground connections) distributes the lead resistance in the instrument circuit, so as to make the effect of lead resistance a minimum.

Type	Scale Ranges
5	20/0/120°F
7	30/160°F
8	30/230°F
*26	0/600°F
6	50/0/50°C
9	0/120°C
*28	50/0/300°C
*27	0/300°C

*These Cylinder Temperature Indicators are adjusted for use with bayonet type resistance bulb AN 5546-1.

Pointer and Dial treated with Green Phosphorescent, Yellow Fluorescent, or Deep Orange Fluorescent. Radioactive Green, Yellow, or Deep Orange is at a surcharge.

Scale ranges listed above are standard, and should be used when possible. Other scale ranges, however, can be supplied if necessary. It should be noted that the crossed pointer design permits the use of two scale ranges entirely independent of each other as to function and range.

(Continued on other side)

INSTALLATION

Cut a hole in the instrument panel for the indicator case, and drill four holes for mounting in accordance with dimensions shown in the diagram below. When the instrument is mounted from the rear of the panel, Tinnerman Nuts may be used. For front panel mounting, a suitable screw and nut is necessary.

Mount the resistance bulbs by means of the threads provided on the bulb body, at the points where the temperature is to be measured. It will be noted from the wiring diagram shown below that two connecting wires are used from each resistance bulb to the instrument.

The wiring as shown eliminates possible apparent resistance changes in the bulb circuit, which would result from introduction of voltage drops across poorly bonded structural members.

Wire the bulbs to the indicator using #20 AWG copper wire, to connect the resistance bulbs in the circuit. Make sure all connections are clean and tight.

DIMENSIONAL AND WIRING DIAGRAMS

(Note: Dimensions in parentheses are millimeters.)

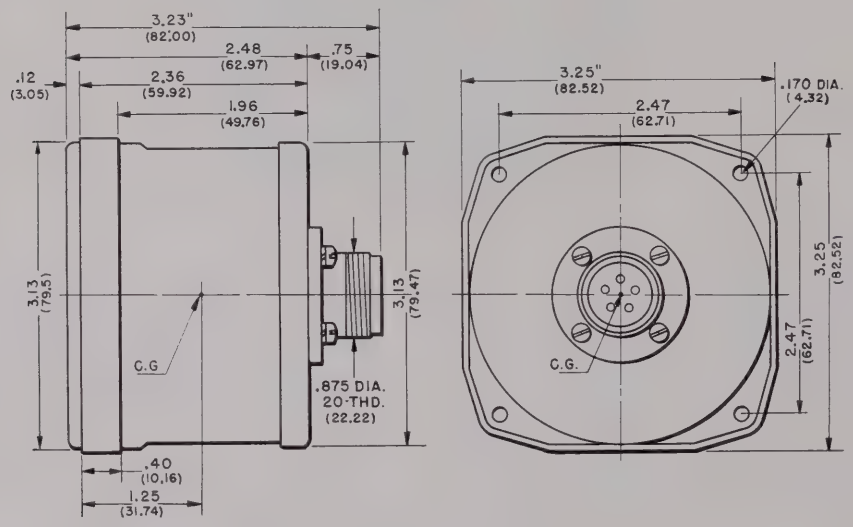

Model 828 Dual Resistance Thermometer

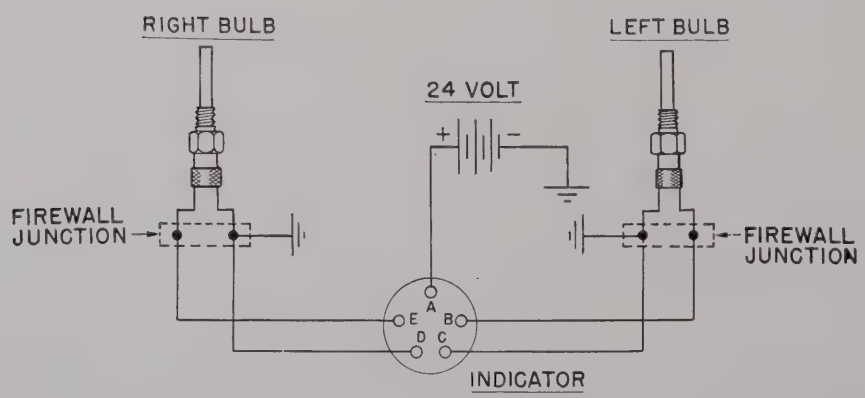

Wiring Diagram

Resistance Thermometer Bulbs . . . Refer to Page 23

RESISTANCE THERMOMETER — MODEL 1123

(Hermetically Sealed)

Cylinder . . . Carburetor . . . Oil . . . Free Air . . . Coolant

Model 1123 with Mounting Bezel

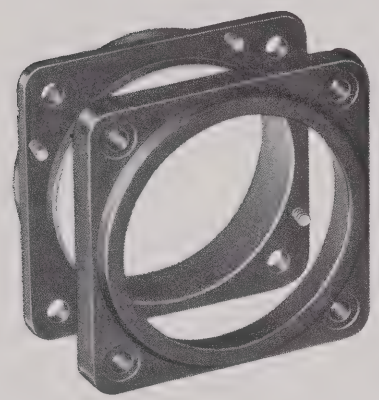

Mounting Bezel

Model 1123 for Clamp Mounting

SPECIFICATIONS

Design: Instrument is of the moving coil ratiometer type and is, therefore little affected by voltage change, thus making it preferable to the conventional bridge type instrument. Furthermore, the magnetic flux available with this Weston permanent magnet moving coil system is sufficiently high to produce the required torque necessary to accommodate scale ranges having fairly low temperature span.

Hermetically Sealed Case 2" Aircraft (AND 10412)
Black Background on Dial
Operating Voltage: 28.5 volts d-c
Magnetically shielded
Radio shielded
Approx. Weight: 0.68 lbs. (310 grams)

Decal Captions: Multi-function instrument normally supplied with appropriate decal captions such as CARB AIR, FREE AIR, CABIN AIR, COOLANT, OIL.

MOUNTING INFORMATION

Normally supplied for mounting by means of a mounting clamp (Mounting Clamp AN5808-1 supplied by aircraft manufacturer) attached to the rear of the panel, which is actuated by the turn of a small screwhead on the front of the panel. When equipped with Mounting Bezel AN5809-1, Weston Part No. 137134, the instrument is suitable for front or rear panel mounting, interchangeable with the conventional AN Flange Mounting instruments (MS33548) such as Weston Model 727.

Bezel mounting holes drilled for use of Tinnerman Nuts—size #6-32 Thd., ⅜" stem, Tinnerman Part A 8943-632-24G

AN Receptacles: 4 Pin—mates with Plug No. AN3106-14s-2S. Note—Type 4 has a 3 Pin receptacle which mates with Plug No. AN3106-10SL-3S.

Use with Weston Resistance Thermometer Bulbs, Part Nos. 112638 (AN5525-1), 112639 (AN5525-2), 122688 (USAF D-1), 125586 (USAF G-1) or 135707 (USAF B-1). Refer to page 21.

Weston Type	Service Type	Scale Ranges
†6	AN5791T1	50/0/50°C
7	MS28008-1	50/0/50°C
8	MS28009-1	70/0/150°C
*9	MS28004-1	0/300°C
*†10	AN5792-1	50/0/300°C
15	MS28039-1	20/0/300°C

*Cylinder Temperature Indicator adjusted for use with bayonet type resistance bulb AN5546-1.

†Note: AN5791T1 furnished with mounting bezel at no additional cost.

(Continued on other side)

INSTALLATION

Cut a hole in the instrument panel for the indicator case. When mounting bezel is used, drill four holes for mounting in accordance with dimensions shown in diagram below. Mount the resistance bulb, by means of the threads provided on the bulb body, at the point where the temperature is to be measured. It will be noted from the wiring diagrams shown below, that two connecting wires from the resistance bulb to the instrument are used, regardless of the fact that the system is grounded. This eliminates possible apparent resistance changes in the bulb circuit, resulting from introduction of voltage drops across poorly bonded structural members.

Wire the bulb to the indicator, using #20 AWG copper wire to connect the resistance bulb in the circuit. If more than one resistance bulb is used, necessitating the use of a suitable switch, make connections as shown in the switch wiring diagram on page 24. Make sure all connections are clean and tight.

DIMENSIONAL AND WIRING DIAGRAMS

(Note: Dimensions in parentheses are millimeters.)

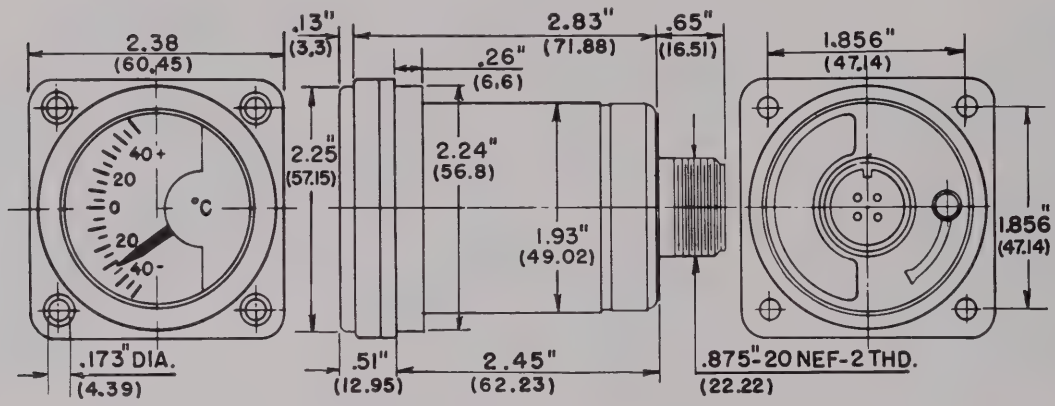

Model 1123 with Mounting Bezel

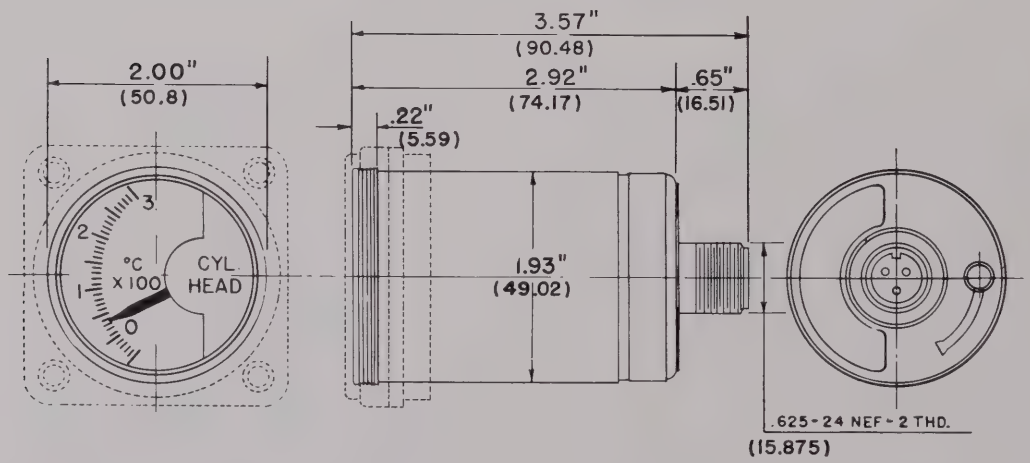

Model 1123 without Mounting Bezel

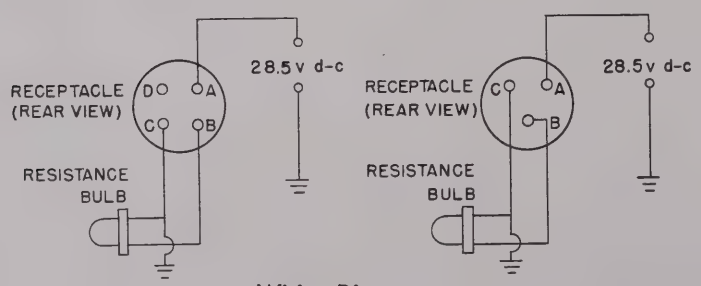

Wiring Diagrams

Resistance Thermometer Bulbs . . . Refer to Page 23

RESISTANCE BULBS

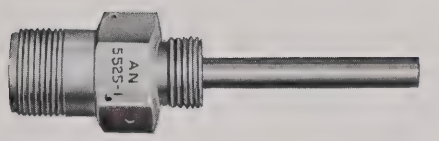

Tubular Resistance Bulb-Service Type MS28034-1

Tubular Resistance Bulb-Service Type MS28034-2

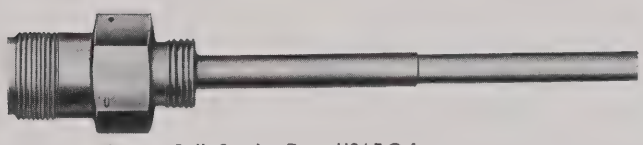

Tubular Resistance Bulb-Service Type USAF G-1

Flush Type Free Air Resistance Bulb-Service Type USAF B-1

TUBULAR TYPE RESISTANCE BULBS

Consist of a carefully adjusted wire resistor with a calibrated temperature coefficient, wound on an anodized aluminum support, which is inserted in a sealed housing.

Identical characteristics provide complete interchangeability.

Sturdy construction permits use under severe conditions of temperature and vibration

Meets all government specifications of accuracy, response time, strength, etc. for this type of equipment

AN receptacle: Part No. AND 10066-12s-3P (2 Pin)

Use Plug No. AN 3106-12s-3S or Weston Part No. 92844

Mounting thread (⅝"-18)

FLUSH TYPE FREE AIR RESISTANCE BULB

Consists of a carefully adjusted wire resistor with calibrated temperature coefficient, secured to a metal diaphragm forming the sensitive portion of the sealed housing.

High-speed response as compared with tubular type resistance bulbs.

Drag reduced to zero at all aircraft speeds.

Inaccuracies due to icing conditions reduced or eliminated depending upon mounting location.

Temperature rise, due to air friction, minimized because bulb mounts flush with skin of ship.

Installation is substantially pressurized.

Identical characteristics provide complete interchangeability with each other and may be used with any Free Air Thermometer calibrated for use with Tubular Resistance Bulbs MS28034-1 or 2.

Sturdy construction permits use under severe conditions of temperature and vibration.

Meets all government specifications of accuracy, response time, strength, etc. for this type of equipment.

AN Receptacle: AND10066-10SL-4P (2 pin).

Use Plug No. AN3106-10SL-4S.

Mounting lugs equipped with approved self-locking nuts.

Supplied with four #6-32 thd. mounting screws.

Supplied with nine gaskets of various thickness to pressurize and facilitate mounting of sensitive surface flush with skin of ship.

WEIGHTS

Order under Model 9975 with appropriate Service Type Number

Service Type	Application	Approx. Weight
MS28034-1	Cabin Air or Carb. Mixture	2.40 oz.
MS28034-2	Oil, Coolant	2.56 oz.
USAF B-1	Free Air	2.10 oz.
USAF G-1	Carburetor*	2.65 oz.

*Reinforced stem for added strength.

(Continued on other side)

INSTALLATION

TUBULAR TYPE RESISTANCE BULBS

Mount the resistance bulb by means of the threads provided on the bulb body at the point where the temperature is to be measured. It is suggested that "anti-seize" compound be used on connector threads as an aid in preventing "galling" of the threads and loosening under vibration.

Caution: Before inserting bulb make sure that stem of bulb *will not rest or vibrate against any obstruction.*

FLUSH TYPE FREE AIR RESISTANCE BULBS

Considerable care must be exercised in selecting a suitable mounting location. All top surfaces of the aircraft should be avoided in order to eliminate errors due to solar radiation. Heated slipstreams and any heated portions of the fuselage, wings, or engine cowling must also be avoided. In avoiding heated slipstreams, substantial allowance for yaw should be made. Portions of the aircraft surface subject to periodic or occasional removal should be avoided as should leading edges subject to icing and high impinging air pressures.

Prepare the location selected with a suitable reinforcing plate, drill and countersink the four mounting holes and cut the large hole to receive the sensitive element, as shown in the diagrams below. Select the proper number and thickness of gaskets so that the sensitive surface of the bulb is flush with the skin of the airplane when the mounting screws are tightened firmly. Moderate caution in handling the flush type bulb is sufficient to prevent damage to the sensitive element.

DIMENSIONAL AND WIRING DIAGRAMS

(Note: Dimensions in parentheses are millimeters)

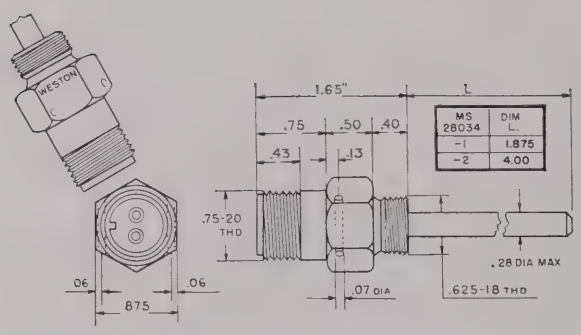

Tubular Resistance Bulb (Types MS28034-1, -2)

Type USAF G-1 same as Type MS28034-2 except with reinforced stem portion 2.00" long and a diameter of .310".

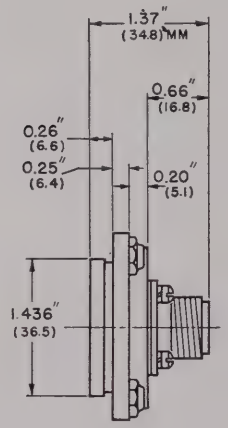

SUPPLIED WITH
4-SCREWS AN-507-632-12

	TYPE	INCHES	M M	WESTON PART
3 GASKETS	1	.031	(.08)	120284
3 GASKETS	2	.062	(.16)	120285
3 GASKETS	3	.094	(.24)	120419

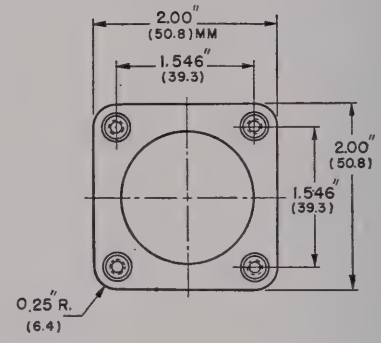

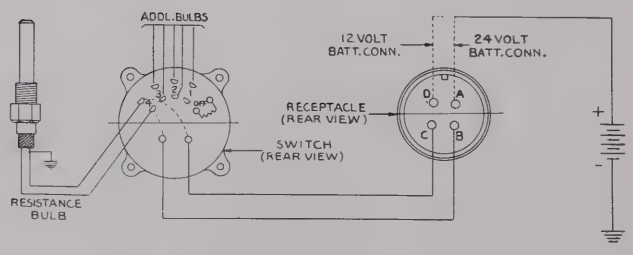

Multiple Bulb Wiring Diagram

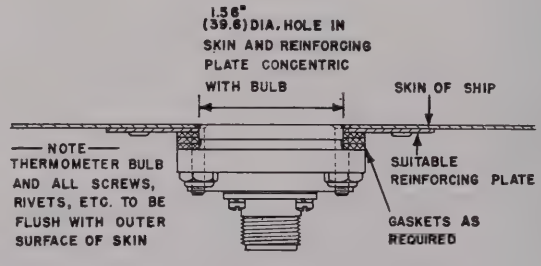
1.56"
(39.6) DIA. HOLE IN SKIN AND REINFORCING PLATE CONCENTRIC WITH BULB
SKIN OF SHIP
NOTE
THERMOMETER BULB AND ALL SCREWS, RIVETS, ETC. TO BE FLUSH WITH OUTER SURFACE OF SKIN
SUITABLE REINFORCING PLATE
GASKETS AS REQUIRED

Flush Type Free Air Resistance Bulb Type USAF B-1

DUAL THERMOCOUPLE THERMOMETER–MODEL 827

Cylinder . . . Bearing . . . Exhaust

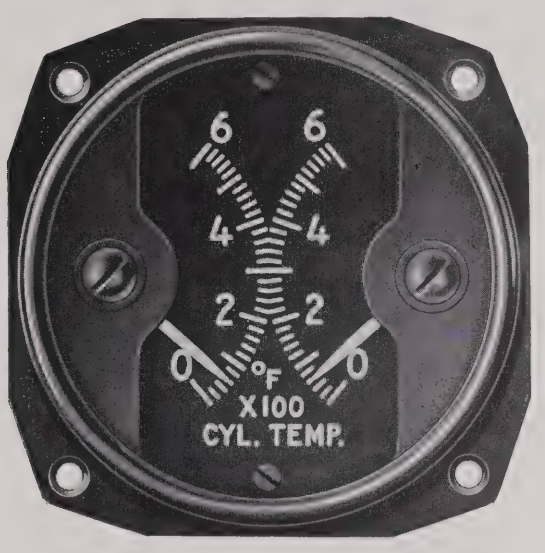

SPECIFICATIONS

Design: Instrument is of the permanent magnet, moving coil type, and is suitably compensated to correct for varying ambient temperatures.

Standard 2¾" aircraft case (MS 33550)

Black background on dial

Magnetically shielded

Calibration: The instrument can be calibrated for use with suitable Thermocouples and Ranges as indicated below. (Specify details when ordering)

Thermocouple Leads: It is necessary to specify the resistance of the thermocouple leads with which the instrument will be used. Standard thermocouple leads are usually cut to either 2 ohms or 8 ohms. This value must be stated when ordering the instrument.

Approx. Weight: 19.2 oz. (.52 kg.)

MOUNTING INFORMATION

Suitable for front or rear panel mounting.

Tinnerman Nuts #A8943-632-24G and mounting screws #6-32 x 1" suitable for rear panel mounting are supplied with the indicator.

Connections to threaded studs on rear of instrument

Weston Type	Service Type	Scale Ranges	Thermo-couple	Lead Res.
		Cylinder Temperature		
8	. . .	0/600°F	C.C.	2 ohms
14	. . .	0/600°F	I.C.	8 ohms
4	AN5536T2A	50/0/300°C	I.C.	8 ohms
9	. . .	0/350°C	C.C.	2 ohms
15	. . .	0/350°C	I.C.	8 ohms
3	FSSC-88-1-2655	0/350°C	C.C.	2 ohms
		Cylinder and Oil Temperature		
29Y1	. . .	50/0/300°C	I.C.	8 ohms
		Bearing Temperature		
6	. . .	50/0/300°C	I.C.	8 ohms
		Exhaust Temperature		
11	. . .	0/1000°C	Ch.-Al.	8 ohms
7	. . .	400/1000°C	Ch.-Al.	8 ohms

Pointer and Dial treated with Green Phosphorescent, Yellow Fluorescent, or Deep Orange Fluorescent. Radioactive Green, Yellow, or Deep Orange is at a surcharge.

C.C.—Copper Constantan *I.C.—Iron Constantan* *Ch.-Al.—Chromel Alumel (A registered trade-mark of Hoskins Manufacturing Co.)*

(Continued on other side)

INSTALLATION

Cut a hole in the instrument panel for the indicator face and drill four mounting holes in accordance with the dimensions given on the diagrams below. When the instrument is mounted from the rear of the panel, Tinnerman Nuts may be used. For front panel mounting, a suitable screw and nut is necessary. Install the thermocouple and leads.

Before connecting the leads to the indicator, check the pointer settings by comparing with an accurate thermometer placed near the indicator. Allow the indicator time to acquire the same temperature as the surrounding air, and then adjust the pointers by means of the zero adjusting screw to the temperature indicated by the thermometer. Once this adjustment is made the automatic compensators in the indicator will take care of any variations in the temperature of the surrounding air.

After the above adjustments have been made, complete the wiring as shown in the diagram below.

Due to the small amount of energy produced by the thermocouples, it is important that all connections be made clean and tight.

DIMENSIONAL AND WIRING DIAGRAMS

(Note: Dimensions in parentheses are millimeters.)

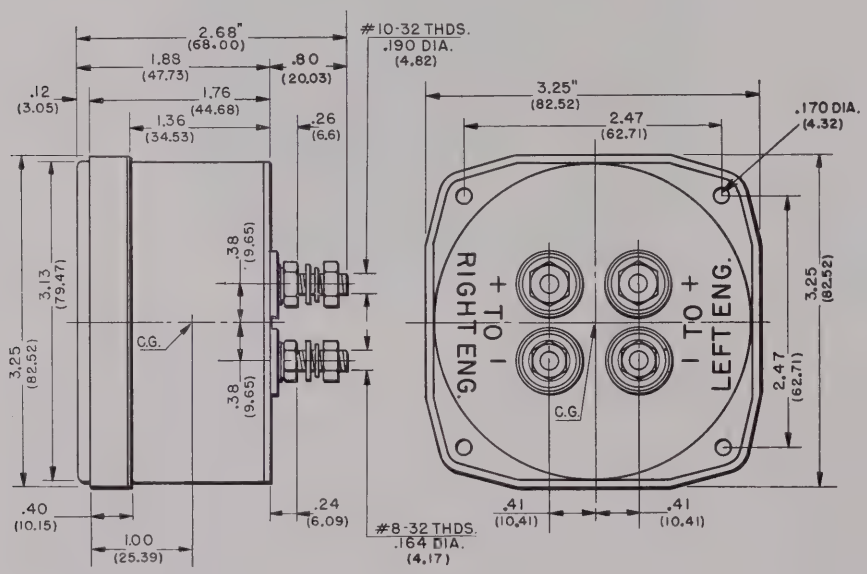

Model 827 Dual Thermocouple Thermometer

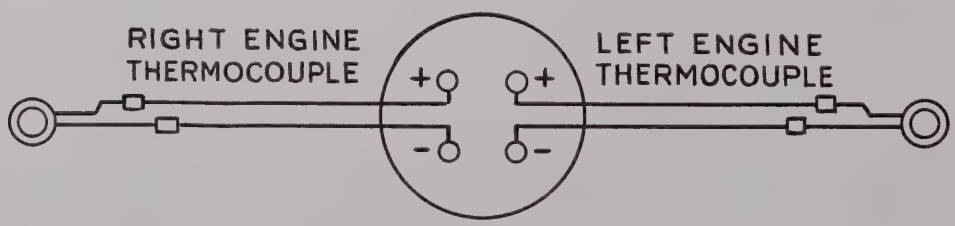

Wiring Diagram

THERMOCOUPLE THERMOMETER — MODEL 840

Cylinder . . . Bearing . . . Exhaust

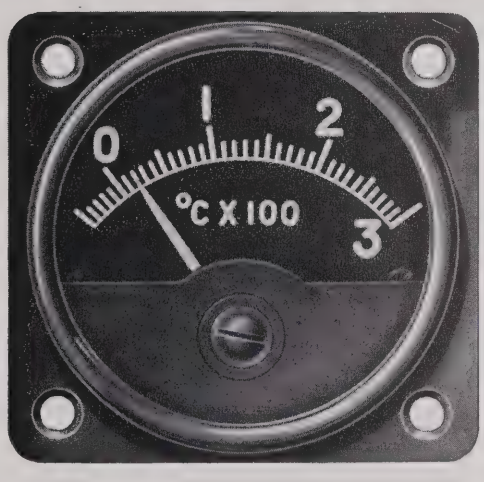

SPECIFICATIONS

Design: Instrument is of the permanent magnet, moving coil type, and is suitably compensated to correct for varying ambient temperatures.

Standard 1⅞" aircraft case (MS 33548)

Black background on dial

Magnetically shielded

Calibration: The instrument can be calibrated for use with suitable Thermocouples and Ranges as indicated below. (Specify details when ordering)

Thermocouple Leads: It is necessary to specify the resistance of the thermocouple leads with which the instrument will be used. Standard thermocouple leads are usually cut to either 2 ohms or 8 ohms. This value must be stated when ordering the instrument.

Approx. Weight: 9.6 oz. (.27 kg.)

MOUNTING INFORMATION

Suitable for front or rear panel mounting

Tinnerman Nuts #A8943-632-24G and mounting screws #6-32 x 1" suitable for rear panel mounting are supplied with the indicator.

Connections to threaded studs on rear of instrument.

Type	Scale Ranges	Thermocouple	Lead Res.
	Cylinder Temperature		
11	0/600°F	C.C.	2 ohms
14	0/600°F	I.C.	2 ohms
13	50/0/300°C	I.C.	8 ohms
12	0/350°C	C.C.	2 ohms
15	0/350°C	I.C.	2 ohms
	Bearing Temperature		
3	50/0/300°C	I.C.	8 ohms
	Exhaust Temperature		
36	0/1000°C	Ch.-Al.	8 ohms
10	400/1000°C	Ch.-Al.	8 ohms

Pointer and Dial treated with Green Phosphorescent, Yellow Fluorescent, or Deep Orange Fluorescent. Radioactive Green, Yellow, or Deep Orange is at a surcharge.

C.C.—Copper Constantan *I.C.—Iron Constantan* *Ch.-Al.—Chromel Alumel* *(A registered trade-mark of Hoskins Manufacturing Co.)*

(Continued on other side)

INSTALLATION

Cut a hole in the instrument panel for the indicator face and drill four mounting holes in accordance with the dimensions given on the diagrams below. When the instrument is mounted from the rear of the panel, Tinnerman Nuts may be used. For front panel mounting, a suitable screw and nut is necessary. Install the thermocouple and leads.

Before connecting the leads to the indicator, check the pointer setting by comparing with an accurate thermometer placed near the indicator. Allow the indicator time to acquire the same temperature as the surrounding air, and then adjust the pointer by means of the zero adjusting screw to the temperature indicated by the thermometer. Once this adjustment is made the automatic compensator in the indicator will take care of any variations in the temperature of the surrounding air.

After the above adjustment has been made, complete the wiring as shown in the diagram below. Due to the small amount of energy produced by the thermocouples, it is important that all connections be made clean and tight.

DIMENSIONAL AND WIRING DIAGRAMS

(Note: Dimensions in parentheses are millimeters.)

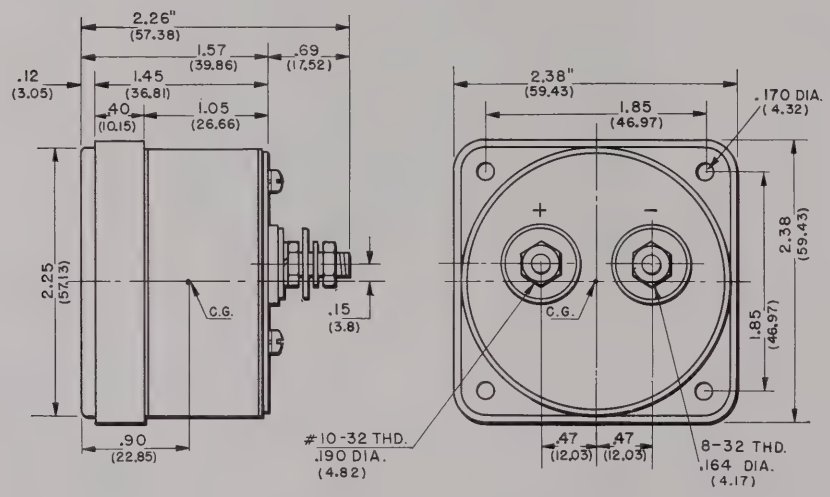

Model 840 Thermocouple Thermometer

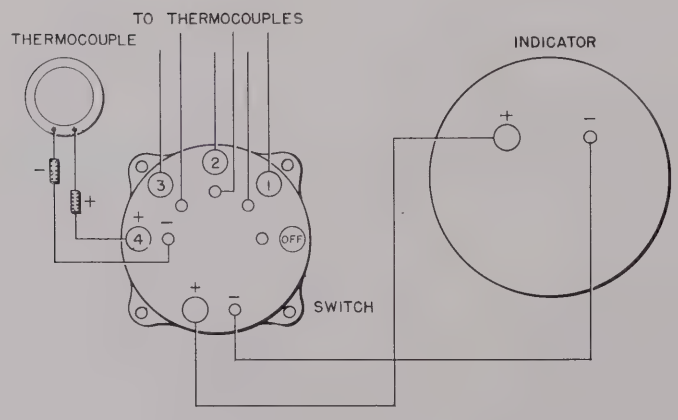

Wiring Diagram

THERMOCOUPLE THERMOMETER — MODEL 841

Cylinder . . . Exhaust

SPECIFICATIONS

Design: Instrument is of the permanent magnet, moving coil type, and is suitably compensated to correct for varying ambient temperatures.

Standard 2¾" aircraft case (MS 33550)

Black background on dial

Approx. Weight: 14.4 oz. (.4 kg.)

Magnetically shielded

Calibration: The instrument can be calibrated for use with suitable Thermocouples and Ranges as indicated below. (Specify details when ordering)

Thermocouple Leads: It is necessary to specify the resistance of the thermocouple leads with which the instrument will be used. Standard thermocouple leads are usually cut to either 2 ohms or 8 ohms. This value must be stated when ordering the instrument.

MOUNTING INFORMATION

Suitable for front or rear panel mounting

Tinnerman Nuts #A8943-632-24G and mounting screws #6-32 x 1" suitable for rear panel mounting are supplied with the indicator.

Connections to threaded studs on rear of instrument

Weston Type	Service Type	Scale Ranges	Thermocouple	Lead Res.
		Cylinder Temperature		
3	. . .	0/600°F	C.C.	2 ohms
6	. . .	0/600°F	I.C.	2 ohms
2	AN5536T1A	50/0/300°C	I.C.	8 ohms
4	. . .	0/350°C	C.C.	2 ohms
7	. . .	0/350°C	I.C.	2 ohms
		Exhaust Temperature		
19	USAF B-9	0/350°C	I.C.	2 ohms
18	USAF K-7	0/1000°C	Ch.-Al.	8 ohms
13	. . .	400/1000°C	Ch.-Al.	8 ohms

Pointer and Dial treated with Green Phosphorescent, Yellow Fluorescent, or Deep Orange Fluorescent. Radioactive Green, Yellow, or Deep Orange is at a surcharge.

C.C.—Copper Constantan *I.C.—Iron Constantan* *Ch.-Al.—Chromel Alumel (A registered trade-mark of Hoskins Manufacturing Co.)*

(Continued on other side)

INSTALLATION

Cut a hole in the instrument panel for the indicator face and drill four mounting holes in accordance with the dimensions given on the diagrams below. When the instrument is mounted from the rear of the panel, Tinnerman Nuts may be used. For front panel mounting, a suitable screw and nut is necessary.

Before connecting the leads to the indicator, check the pointer setting by comparing with an accurate thermometer placed near the indicator. Allow the indicator time to acquire the same temperature as the surrounding air, and then adjust the pointer by means of the zero adjusting screw to the temperature indicated by the thermometer. Once this adjustment is made the automatic compensator in the indicator will take care of any variations in the temperature of the surrounding air.

After the above adjustment has been made, complete the wiring as shown in the diagram below. Due to the small amount of energy produced by the thermocouples, it is important that all connections be made clean and tight.

DIMENSIONAL AND WIRING DIAGRAMS

(Note: Dimensions in parentheses are millimeters.)

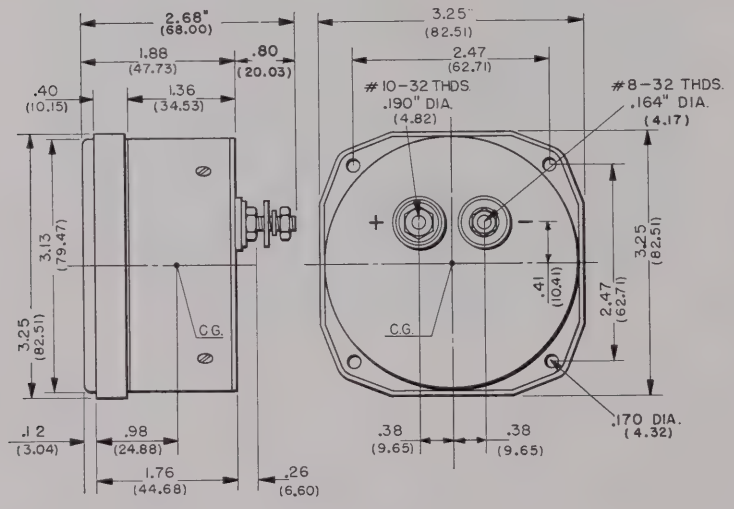

Model 841 Thermocouple Thermometer

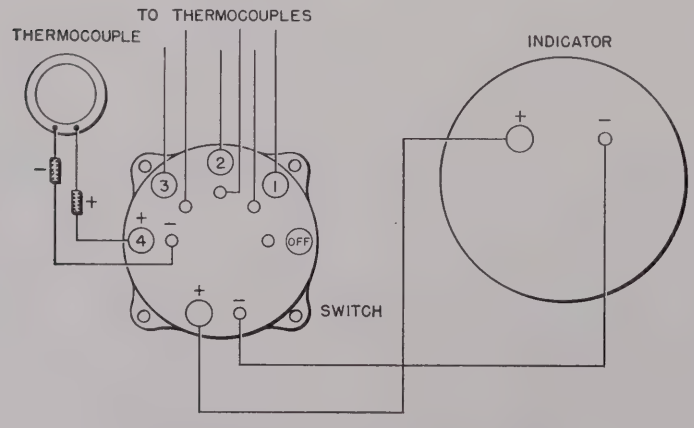

Multiple Thermocouple Wiring Diagram

THERMOCOUPLE THERMOMETER — MODEL 1121

(Hermetically Sealed)

Cylinder . . . Bearing . . . Exhaust . . .

Model 1121 with Mounting Bezel

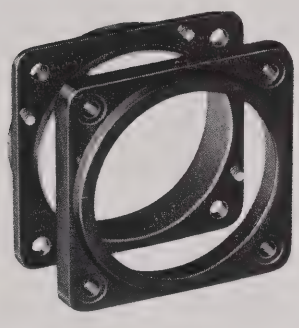

Mounting Bezel

Model 1121 for Clamp Mounting

SPECIFICATIONS

Design: Instrument is of the permanent magnet moving coil type, and is suitably compensated to correct for varying ambient temperatures.

Hermetically Sealed Case 2" Aircraft (AND 10412)

Normally supplied with Black Background on Dial with pointer, scale, and caption per type suffix.

Calibration: Can be calibrated for use with suitable thermocouples and ranges as indicated below.

Thermocouple Leads: It is necessary to specify the resistance of the thermocouple leads with which the instrument will be used. Standard thermocouple leads are usually cut to 2 or 8 ohms. This resistance value, as well as type of thermocouple, must be stated when ordering the instrument.

Magnetically shielded

Approx. Weight: 0.6 lbs. (270 gms.)

Decal Captions: Multi-function instrument normally supplied with appropriate decal captions such as CYL HEAD, BEARING.

Connection to screw type connections on rear of instrument.

MOUNTING INFORMATION

Normally supplied for mounting by means of a mounting clamp (Mounting Clamp AN5808-1 supplied by the aircraft manufacturer) attached to the rear of the panel, which is actuated by the turn of a small screwhead on the front of the panel. When equipped with Mounting Bezel AN5809-1, Weston Part No. 137134, the instrument is suitable for front or rear panel mounting, interchangeable with the conventional AN Flange mounting instruments (MS 33548) such as Weston Model 840.

Bezel mounting holes drilled for use of Tinnerman Nuts — size #6-32 Thd., ⅜" stem, Tinnerman Part A8943-632-24G.

Weston Type	Service Type	Scale Range	Thermocouple	Lead Res.
3	MS28006-1	0-1000°C	Ch.-Al.	8 ohms
4	MS28006-2	0-1000°C	Ch.-Al.	22 ohms
5	MS28007-1	50/0/300°C	I. C.	8 ohms
10	.....	400/1000°C	Ch.-Al.	8 ohms
11	.....	0-600°F	C. C.	2 ohms
12	.....	0-350°C	C. C.	2 ohms
14	.....	0-600°F	I. C.	2 ohms
15	.....	0-350°C	I. C.	2 ohms

Pointer and Dial treated with Green Phosphorescent, Yellow Fluorescent, or Deep Orange Fluorescent. Radioactive Green, Yellow, or Deep Orange is at a surcharge.

C.C.—Copper Constantan *I.C.—Iron Constantan* *Ch.-Al.—Chromel Alumel (A registered trade-mark of Hoskins Manufacturing Co.)*

(Continued on other side)

INSTALLATION

Cut a hole in the instrument Panel for the indicator case. When mounting bezel is used, drill four holes for mounting in accordance with dimensions shown in diagram below. When the instrument is mounted from the rear of the panel, Tinnerman Nuts may be used. For front panel mounting, a suitable screw and nut is necessary. Install the thermocouple and leads. Before connecting the leads to the indicator, check the pointer setting by comparing with an accurate thermometer placed near the indicator. Allow sufficient time for the indicator to reach the same temperature as the surrounding air, and adjust the pointer by means of the zero adjusting screw on the rear of the instrument to the temperature indicated by the Thermometer. Once the adjustment is made, the automatic compensator in the instrument will take care of any variations in the temperature of the surrounding air.

After the above adjustment has been made, complete the wiring as shown in the diagram below. Due to the small amount of energy produced by thermocouples, it is important that all connections be made clean and tight, that themocouples and leads be in good condition, and that the polarity of the thermocouple and lead wires not be transposed between the thermocouple and the instrument.

DIMENSIONAL AND WIRING DIAGRAMS

(Note: Dimensions in parentheses are millimeters)

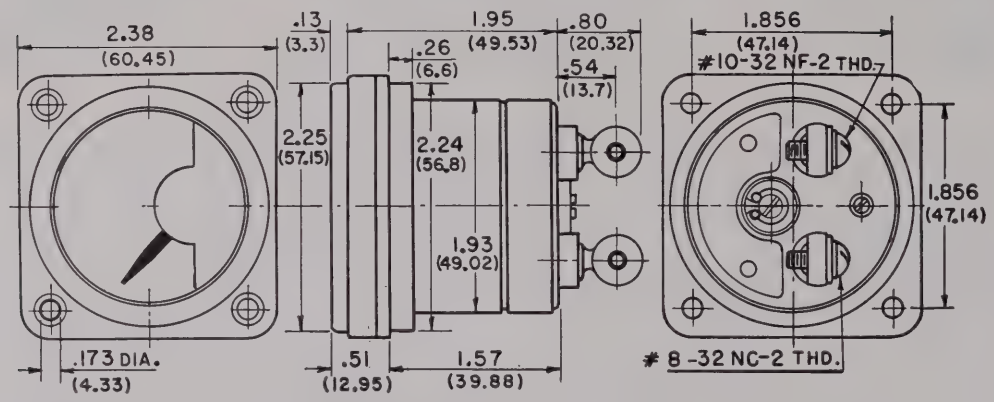

Model 1121 with Mounting Bezel

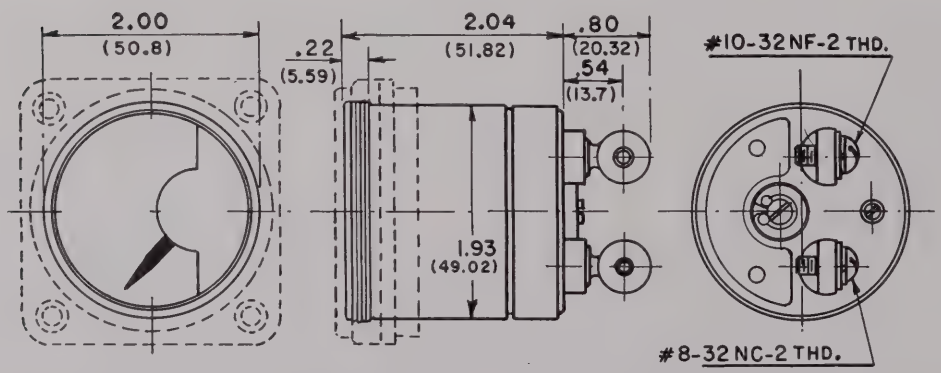

Model 1121 without Mounting Bezel

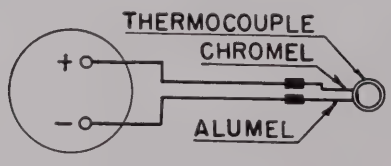

Wiring Diagram

LONG SCALE THERMOCOUPLE THERMOMETER — MODEL 1122

(Hermetically Sealed)

Turbine Inlet . . . Exhaust

Model 1122 with Mounting Bezel

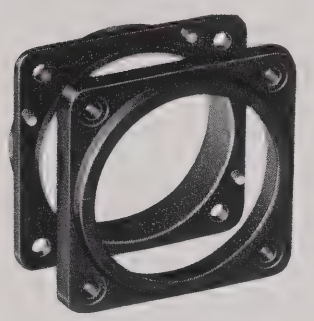

Mounting Bezel

Model 1122 for Clamp Mounting

SPECIFICATIONS

Design: Instrument is of the 250 degree deflection permanent magnet moving coil type, and is suitably compensated to correct for varying ambient temperatures.

Hermetically Sealed Case 2" Aircraft (AND 10412)

Normally supplied with Black Background on Dial with pointer, scale, and caption per type suffix.

Calibration: Can be calibrated for use with suitable thermocouples and ranges as indicated below.

Thermocouple Leads: It is necessary to specify the resistance of the thermocouple leads with which the instrument will be used. Standard thermocouple leads are usually 2 or 8 ohms. This resistance value, as well as type of thermocouple, must be stated when ordering the instrument.

Magnetically shielded

Approx. Weight: 0.75 (340 gms.)

Connection to screw type terminals on rear of instrument.

The Model 1122, while primarily designed as a thermocouple type temperature indicator, can be supplied with special scales and sensitivities for application where a small size, long scale instrument is required.

MOUNTING INFORMATION

Normally supplied for mounting by means of a mounting clamp (Mounting Clamp AN5808-1 supplied by the aircraft manufacturer) attached to the rear of the panel, which is actuated by the turn of a small screwhead on the front of the panel. When equipped with Mounting Bezel AN5809-1, Weston Part No. 137134, the instrument is suitable for front or rear panel mounting, interchangeable with the conventional AN Flange mounting instruments (MS 33548) such as Weston Model 840.

Bezel mounting holes drilled for use of Tinnerman Nuts — size #6-32 Thd., ⅜" stem, Tinnerman Part A 8943-632-246.

Weston Type	Service Type	Scale Range	Thermocouple	Lead Res.
3	MJ2	0-1000°C	Ch-AL	8 ohms
4	MJ1	0-1000°C	Ch-AL	22 ohms
5	MJ6	0-1200°C	Ch-AL	8 ohms
6	MJ3	0-1200°C	Ch-AL	22 ohms

Pointer and Dial treated with Green Phosphorescent, Yellow Fluorescent, or Deep Orange Fluorescent. Radioactive Green, Yellow, or Deep Orange is at a surcharge.

(Continued on other side)

INSTALLATION

Cut a hole in the instrument Panel for the indicator case. When mounting bezel is used, drill four holes for mounting in accordance with dimensions shown in diagram below. When the instrument is mounted from the rear of the panel, Tinnerman Nuts may be used. For front panel mounting, a suitable screw and nut is necessary. Install the thermocouple and leads. Before connecting the leads to the indicator, check the pointer setting by comparing with an accurate thermometer placed near the indicator. Allow sufficient time for the indicator to reach the same temperature as the surrounding air, and adjust the pointer by means of the zero adjusting screw on the rear of the instrument to the temperature indicated by the Thermometer. When special accuracy is required at a given mark on the scale, the exact equivalent millivoltage for that mark, based on existing ambient temperatures, may be applied to the instrument terminals through the resistance for which the instrument is calibrated and the zero corrector adjusted so that the pointer reads on the desired mark. Once the adjustment is made, the automatic compensator in the instrument will take care of any variations in the temperature of the surrounding air.

After the above adjustment has been made, complete the wiring as shown in the diagram below. Due to the small amount of energy produced by thermocouples, it is important that all connections be made clean and tight, that thermocouples and leads be in good condition, and that the polarity of the thermocouple and lead wires not be transposed between the thermocouple and the instrument.

DIMENSIONAL AND WIRING DIAGRAMS

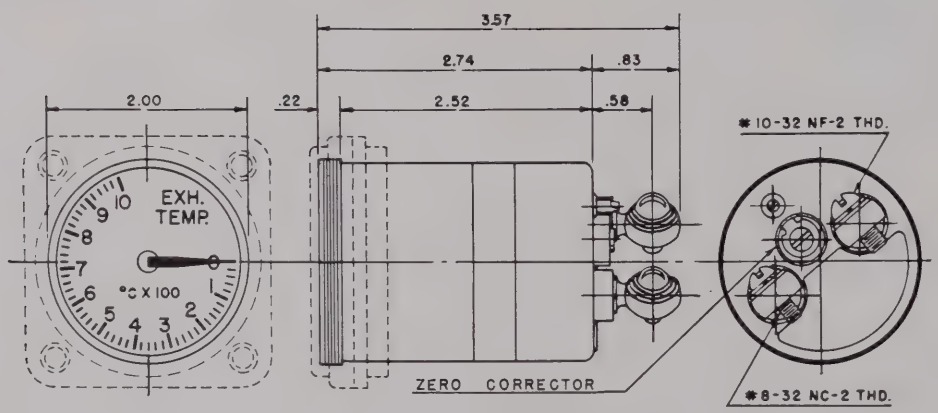

Model 1122 with Mounting Bezel

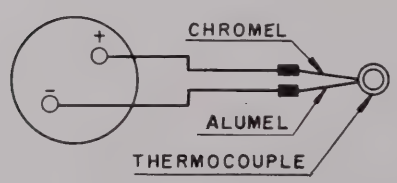

Wiring Diagram

LONG SCALE INDICATOR—MODEL 955

Turbine Inlet . . . Exhaust

SPECIFICATIONS

Design: Instrument is of the 250 degree deflection permanent magnet moving coil type, and is suitably compensated to correct for varying ambient temperatures.

Standard 2¾" dial Aircraft Case (MS33550)

Normally supplied with black background on Dial with pointer, scale, and caption per type suffix. See index and ordering data sheet for types of available dial and pointer finishes.

Calibration: Can be calibrated for use with suitable thermocouples and ranges as indicated below.

Thermocouple Leads: It is necessary to specify the resistance of the thermocouple leads with which the instrument will be used. Standard thermocouple leads are usually 2 or 8 ohms. This resistance value, as well as type of thermocouple, must be stated when ordering the instrument.

Magnetically shielded

Approx. Weight: 0.9 lbs. (408 gms.)

Zero corrector on rear of instrument

Connection to screw type terminals on rear of instrument.

While the Model 955 illustrated is a Thermocouple Type Temperature Indicator, the instrument can also be supplied as a Resistance Thermometer, Voltmeter, Milliammeter or Microammeter. Sensitivities as low as 100 microamps for 250 degrees deflection are available for special applications. Receptacles or headers can be furnished in place of the screw type terminals as shown.

MOUNTING INFORMATION

Suitable for front or rear panel mounting.

Tinnerman Nuts #8943-632-24G and mounting screws #6-32 x 1" suitable for rear panel mounting are supplied with the indicator.

Weston Type	Service Type	Scale Ranges	Thermocouple	Lead Res.
3	....	0/800°C	Ch.Al.	25 ohms

(Continued on other side)

INSTALLATION

Cut a hole in the instrument panel for the indicator face and drill four mounting holes in accordance with dimensions given on the diagrams below. When the instrument is mounted from the rear of the panel, Tinnerman Nuts may be used. For front panel mounting, a suitable screw and nut is necessary.

Install the thermocouple and leads. Before connecting the leads to the indicator, check the pointer setting by comparing with an accurate thermometer placed near the indicator. Allow sufficient time for the indicator to reach the same temperature as the surrounding air, and adjust the pointer by means of the zero adjusting screw on the rear of the instrument to the temperature indicated by the Thermometers.

When special accuracy is required at a given mark on the scale, the exact equivalent millivoltage for that mark, based on existing ambient temperatures, may be applied to the instrument terminals through the resistance for which the instrument is calibrated and the zero corrector adjusted so that the pointer reads on the desired mark. Once the adjustment is made, the automatic compensator in the instrument will take care of any variations in the temperature of the surrounding air.

After the above adjustment has been made, complete the wiring as shown in the diagram below. Due to the small amount of energy produced by thermocouples, it is important that all connections be made clean and tight, that thermocouples and leads be in good condition, and that the polarity of the thermocouple and lead wires not be transposed between the thermocouple and the instrument.

For other than thermocouple type temp. indicators, see illustrations with the instrument.

DIMENSIONAL AND WIRING DIAGRAMS

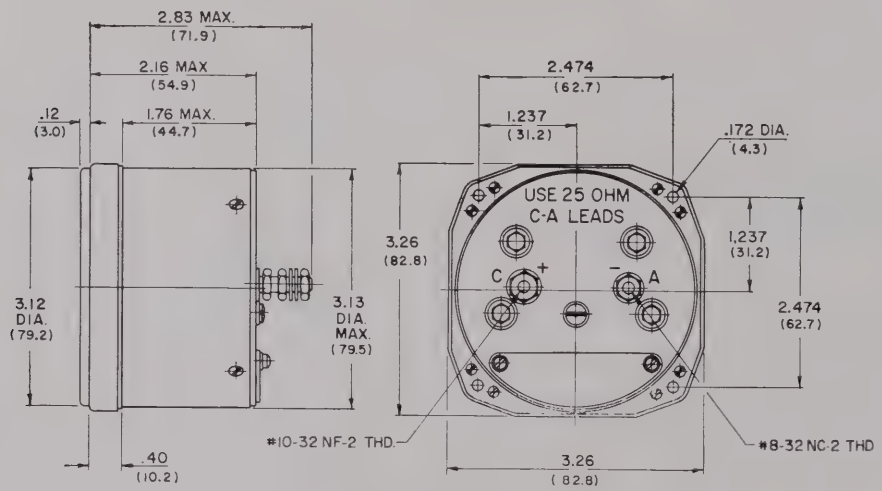

Model 955 Long Scale Indicator

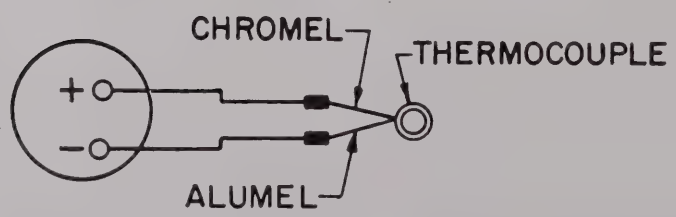

Wiring Diagram when used as a Thermocouple Thermometer

LONG SCALE INDICATOR—MODEL 1132

(HERMETICALLY SEALED)

Turbine Inlet . . . Exhaust

SPECIFICATIONS

Design: Instrument is of the 250 degree deflection permanent magnet moving coil type, and is suitably compensated to correct for varying ambient temperatures.

Hermetically Sealed Case 3¼" Aircraft (MS 33516)

Normally supplied with black background on Dial with pointer, scale, and caption per type suffix. See index and ordering data sheet for types of available dial and pointer finishes.

Calibration: Can be calibrated for use with suitable thermocouples and ranges as indicated below.

Thermocouple Leads: It is necessary to specify the resistance of the thermocouple leads with which the instrument will be used. Standard thermocouple leads are usually 2 or 8 ohms. This resistance value, as well as type of thermocouple, must be stated when ordering the instrument.

Magnetically shielded

Zero Corrector on rear of instrument

Approx. Weight: 1.03 lbs. (468 gms.)

Connection to screw type terminals on rear of instrument.

While the *Model 1132* illustrated is a Thermocouple Type Temperature Indicator, it can also be supplied as a Resistance Thermometer, Voltmeter, Ammeter, Milliammeter or Microammeter. Sensitivities as low as 100 microamps for 250 degrees deflection are available for special application. Receptacles or headers can be furnished in place of the screw type terminal as shown.

MOUNTING INFORMATION

Normally supplied for mounting by means of a mounting clamp (Mounting Clamp AN5808-2 supplied by the aircraft manufacturer) attached to the rear of the panel, which is actuated by the turn of a small screwhead on the front of the panel.

Weston Type	Service Type	Scale Range	Thermocouple	Load Res.
3	MJ-4	0-1000°C	Ch-AL	8 ohms

(Continued on other side)

INSTALLATION

Cut a hole in the instrument panel for the indicator case, and suitable holes for supporting the instrument clamp.

Install the thermocouple and leads. Before connecting the leads to the indicator, check the pointer setting by comparing with an accurate thermometer placed near the indicator. Allow sufficient time for the indicator to reach the same temperature as the surrounding air, and adjust the pointer by means of the zero adjusting screw on the rear of the instrument to the temperature indicated by the thermometer.

When special accuracy is required at a given mark on the scale, the exact equivalent millivoltage for that mark, based on existing ambient temperatures, may be applied to the instrument terminals through the resistance for which the instrument is calibrated and the zero corrector adjusted so that the pointer reads on the desired mark. Once the adjustment is made, the automatic compensator in the instrument will take care of any variations in the temperature of the surrounding air.

After the above adjustment has been made, complete the wiring as shown in the diagram below. Due to the small amount of energy produced by thermocouples, it is important that all connections be made clean and tight, that thermocouples and leads be in good condition, and that the polarity of the thermocouple and lead wires not be transposed between the thermocouple and the instrument.

DIMENSIONAL AND WIRING DIAGRAMS

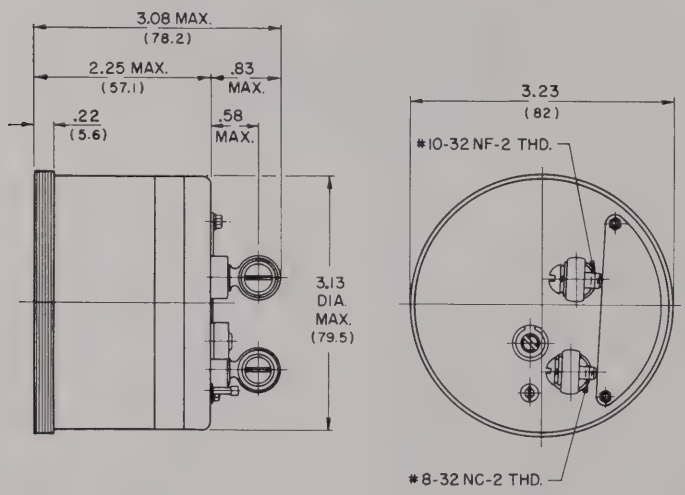

Model 1132 Long Scale Indicator

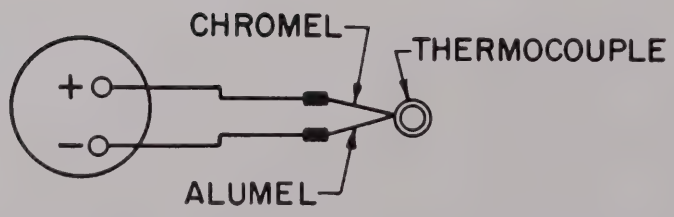

Wiring Diagram when used as a Thermocouple Thermometer

CROSS - POINTER INDICATOR – MODEL 888

Similar to USAF Type ID-48
For Instrument Landing System

SPECIFICATIONS

Design: Instrument contains 4 permanent magnet moving coil mechanisms with current sensitivity and response time to suit electrical characteristics of the receiver circuits. Similar to USAF Type ID-48.

Cross Pointers: Vertical and Horizontal pointers are operated from the localizer and glide path receivers respectively.

Warning Signals: Two brilliant fluorescent red colored "flag pointers" operate as warning signals to show when the receiver circuits are functioning properly. When circuits are inoperative, pointers lie on dotted lines and show "OFF" signal. As current is built up, the flag pointers move away from the dotted line and at full operating current, disappear behind the black shield.

2¾" aircraft case similar to MS 33549

Black background on dial

Pointers and dots are treated with luminous material to provide against failure of the aircraft lighting system.

Fluorescent blue and yellow sectors at base of dial are activated by ultra-violet light.

Marker beacon lamp mounted in lower left corner of case is fitted with small shutter which can be adjusted for light intensity by turning the knob.

Lamp Bulb can be tested by depressing the knob. The lamp should light. (For replacement, use Mazda #313—28 volt bulb.)

Magnetically shielded

Radio shielded

Approx. Weight: 30 oz. (.85 kg.)

MOUNTING INFORMATION

Suitable for front or rear of panel mounting

Tinnerman Nuts #A8943-632-24G and mounting screws #6-32 x 1" suitable for rear panel mounting are supplied with the indicator.

AN receptacle for Indicator mechanism, AN-3102-18-1P (Use Plug AN-3106-18-1S. Not supplied.)

AN receptacle for Marker Beacon Lamp. AN-3102-14s-7P (Use Plug AN-3106-14s-7S. Not supplied.)

(Continued on other side)

INSTALLATION

Cut a hole in the instrument panel for the indicator face, and drill mounting holes in accordance with dimensions given on the applicable diagram below. When instrument is mounted from the rear of the panel, Tinnerman Nuts may be used. For front panel mounting, suitable screws and nuts are necessary.

Wire in accordance with the appropriate diagram below. Make sure all connections are clean and tight.

DIMENSIONAL AND WIRING DIAGRAMS

(Note: Dimensions in parentheses are millimeters)

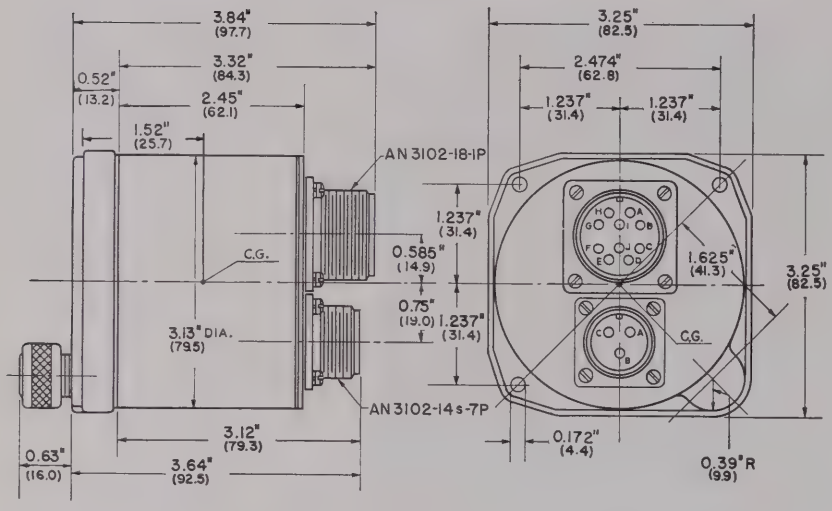

Model 888

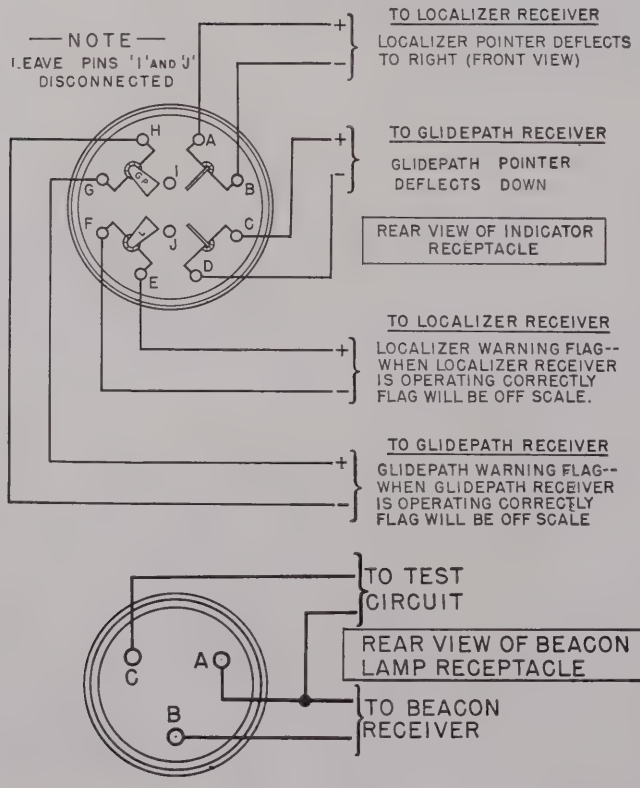
— NOTE —
LEAVE PINS 'I' AND 'J' DISCONNECTED
TO LOCALIZER RECEIVER
LOCALIZER POINTER DEFLECTS TO RIGHT (FRONT VIEW)
TO GLIDEPATH RECEIVER
GLIDEPATH POINTER DEFLECTS DOWN
REAR VIEW OF INDICATOR RECEPTACLE
TO LOCALIZER RECEIVER
LOCALIZER WARNING FLAG-- WHEN LOCALIZER RECEIVER IS OPERATING CORRECTLY FLAG WILL BE OFF SCALE.
TO GLIDEPATH RECEIVER
GLIDEPATH WARNING FLAG-- WHEN GLIDEPATH RECEIVER IS OPERATING CORRECTLY FLAG WILL BE OFF SCALE
TO TEST CIRCUIT
REAR VIEW OF BEACON LAMP RECEPTACLE
TO BEACON RECEIVER

Wiring Diagram

Panel Cut-Out

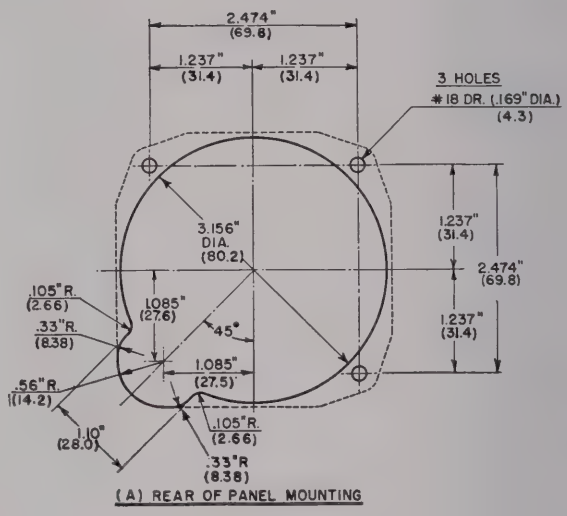

(A) REAR OF PANEL MOUNTING

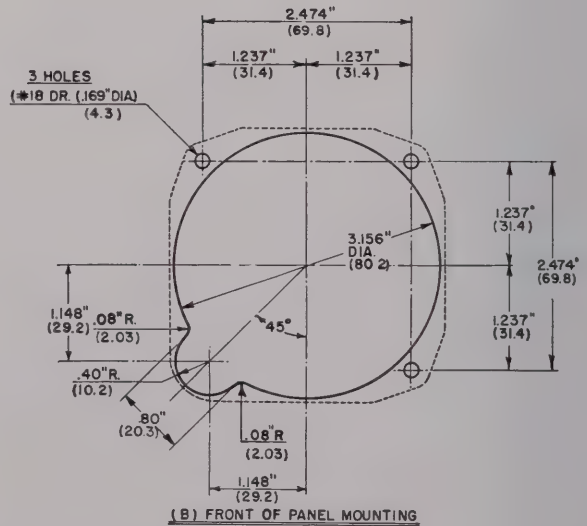

(B) FRONT OF PANEL MOUNTING

TRIM/TAB INDICATORS

SPECIFICATIONS

Designs: *Model 1883 Trim Tab*—This instrument contains up to three separate permanent magnet-moving coil type, d-c mechanisms and half of a calibrated Wheatsone-Bridge circuit associated with each mechanism. The other half of the bridge circuit consists of a potentiometer contained in, and mechanically linked to actuators which operate the control surfaces which the instrument is to monitor. Excellent accuracy is attained under all conditions in the region of zero tab angle, the usual angle of importance. Usually operating from 500 to 1000 ohm potentiometers this instrument has proved versatile in many different aircraft applications.

The scale shown (right) is only typical and may be supplied with a wide selection of scale ranges. Correspondence is invited in connection with applications of this instrument since the potentiometer zero position, angular travel, and unused angle for each application are of considerable importance.

Model 1883 and Model 1889 Trim Indicators—These instruments each contain up to three permanent magnet-moving coil type mechanisms arranged for zero center indications. The individual mechanisms are usually quite heavily damped to minimize the effect of sudden small fluctuations.

Usually applied in automatic pilot installations, these indicators can be supplied in a wide variety of current sensitivities and resistances. Specifications are usually in terms similar to those of zero center voltmeters, stating voltage range and resistance.

Standard 2¾" aircraft case (MS 33550)—Model 1883 only

Black background on dial

Magnetically and Radio shielded

App. Wt.: Model 1883: 1 lb., Model 1889: .51 lb.

MOUNTING INFORMATION

Model 1883 is suitable for either front or rear panel mounting and is usually supplied with #6-32 Thd. Tinnerman Nuts. *Model 1889* is available for front panel mounting only.

Pointer and Dial treated with Green Phosphorescent, Yellow Fluorescent, or Deep Orange Fluorescent. Radioactive Green, Yellow, or Deep Orange is at a surcharge.

Model 1883 Trim Tab

Model 1883 Trim

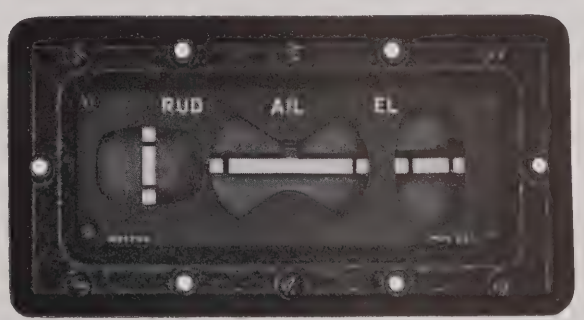

Model 1889 Trim

(Continued on other side)

INSTALLATION

Cut a hole in the instrument panel for the indicator face, and drill mounting holes in accordance with dimensions given on the applicable diagram below. When instrument is mounted from the rear of the panel, Tinnerman Nuts may be used. For front panel mounting, suitable screws and nuts are necessary.

Wire in accordance with the appropriate diagram below. Make sure all connections are clean and tight.

DIMENSIONAL AND WIRING DIAGRAMS

(Note: Dimensions in parentheses are millimeters)

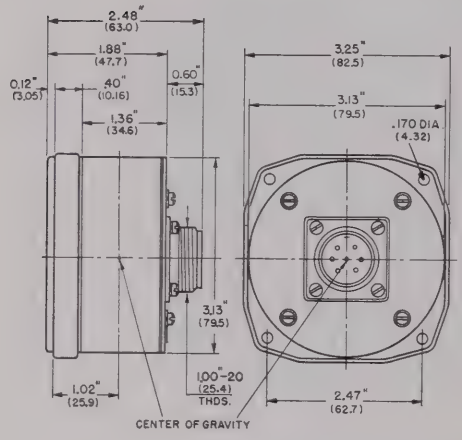

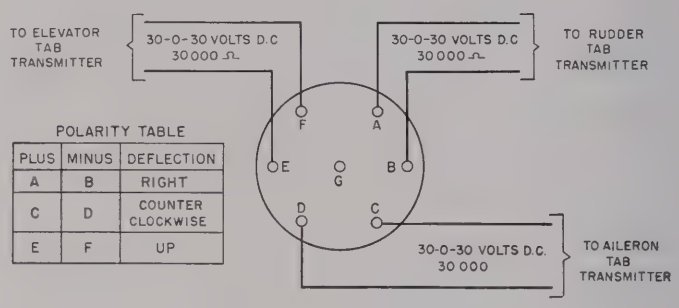

Model 1883 Trim Tab

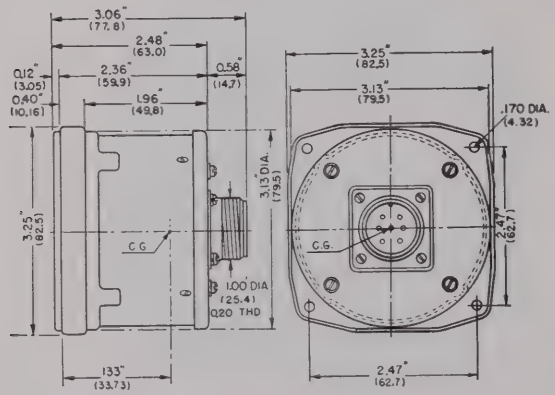

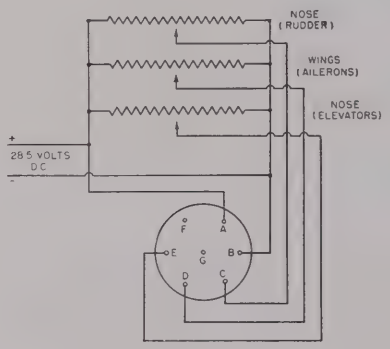

Model 1883 Trim

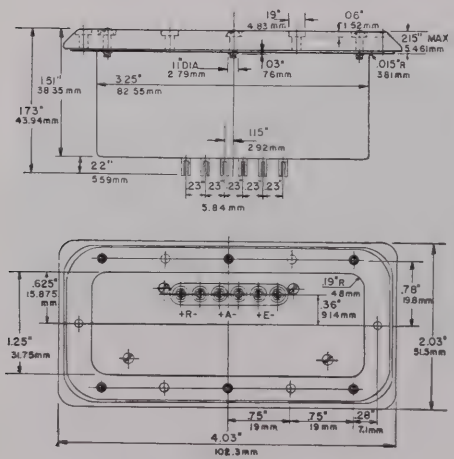

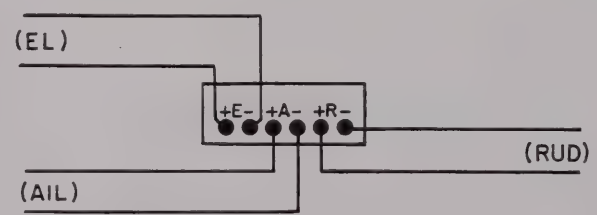

Model 1889 Trim

COURSE INDICATOR — MODEL 1856

Similar to USAF Type ID-351B/ARN

For Omni Directional Range (VOR) and Instrument Landing System

(Interchangeable with ID-249/ARN, ID-249B/ARN, ID-351/ARN, ID-351A/ARN)

SPECIFICATIONS

General: The Course Indicator is a pictorial heading, cross pointer instrument combining information from localizer, glide slope and marker beacon equipment with course indications obtained from a gyrosyn type compass to assist in an asymptotic approach to the localizer course.

The omni directional range function includes a course selector and an ambiguity indicator which operate from the omni-range receiver. The localizer pointer is used as a course deviation indicator and the deviation and heading indications provide a means of making an asymptotic approach to the omni-directional range course. A heading datum synchro (control transformer) is provided for coupling to the automatic pilot equipment where desired.

The course indicator is designed to operate with AN/ARN-14 Omni-Range Receivers or Commercial equivalents.

The entire instrument is hermetically sealed to assure maximum reliability under extreme environmental conditions.

Mechanisms:

1. Localizer or Omni-range Pointer.....150-0-150 μa
2. Glide Slope Pointer.....150-0-150 μa
3. Ambiguity ("To-From") Indicator 150-0-150μa to 250-0-250 μa
4. Localizer Flag.....180 μa (leave stop), 245 μa (concealed)
5. Glide Slope Flag.....180 μa (leave stop), 245 μa (concealed)

Synchros:

1. Heading (Repeater).....26 v 400 cps (rotor)
2. Resolver.....0.36 v 30 cps (stator)
3. Heading Datum (control transformer).....11.8 v 400 cps (stator)

Lamp: Marker Beacon Lamp Assembly.....28 volts d-c

Case: 3" Aircraft

Bezel: AN Style

Dial: Dull black background with yellow fluorescent dots and heading pointer graduations.

Cross Pointers: Yellow fluorescent

Alarm Flags: "OFF" printed in black on red fluorescent background.

Ambiguity Pointer: "TO" and "FROM" yellow fluorescent on dull black background.

Course Selector: Yellow fluorescent numerals on dull black background.

Receptacles, Hermetically Sealed:

26-Pin — Similar to AN3102D-28-12P

3-Pin — Similar to AN3102D-10-SL-2P

Approx. Weight: 3 lbs. 14 oz (1.76 kgs.)

Mounting: Front or rear panel mounting.

(Continued on other side)

INSTALLATION

Cut a hole in the instrument panel for the indicator face, and drill mounting holes in accordance with dimensions given on the applicable diagram below. For front panel and rear mounting, suitable screws and nuts are necessary. Wire as indicated.

DIMENSIONAL AND WIRING DIAGRAMS

(Note: Dimensions in parentheses are millimeters)

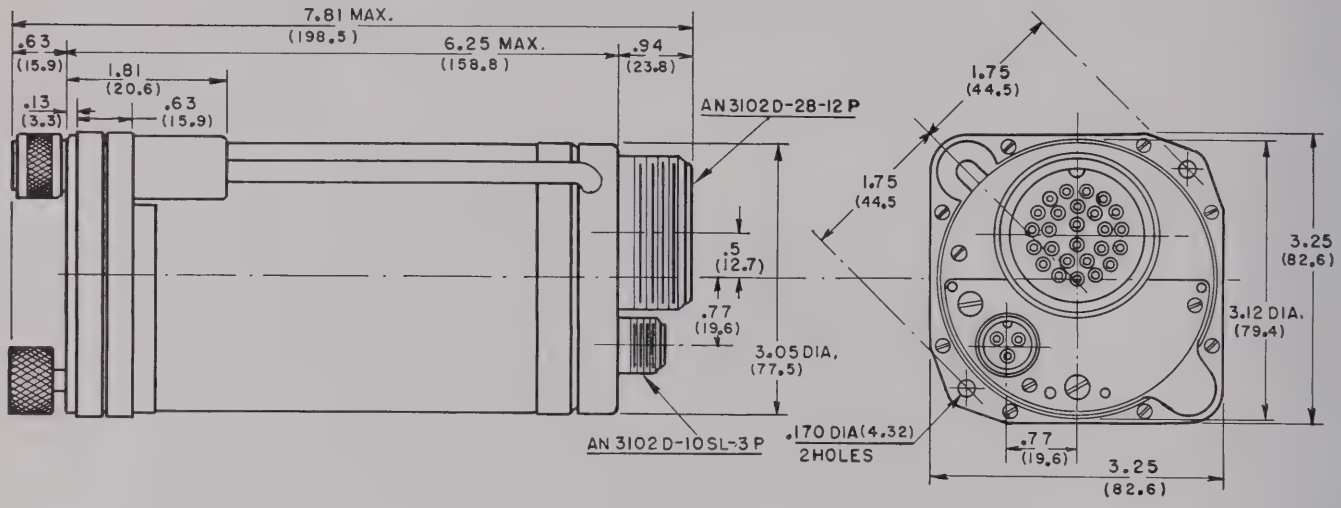

Model 1151

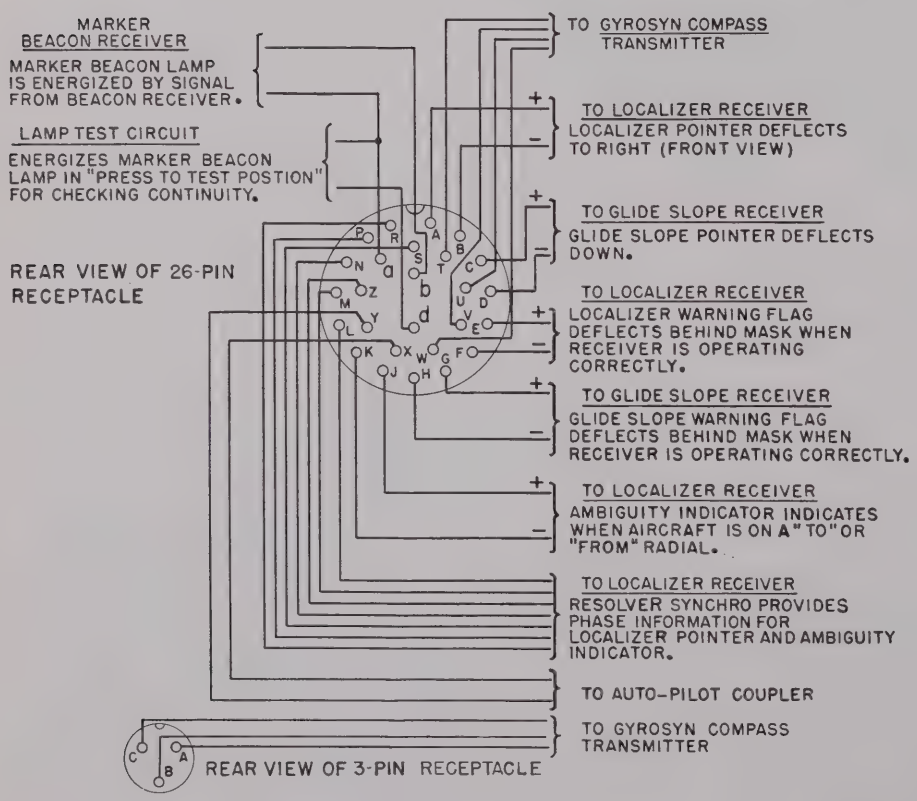
MARKER BEACON RECEIVER
MARKER BEACON LAMP IS ENERGIZED BY SIGNAL FROM BEACON RECEIVER.
LAMP TEST CIRCUIT
ENERGIZES MARKER BEACON LAMP IN "PRESS TO TEST POSTION" FOR CHECKING CONTINUITY.
REAR VIEW OF 26-PIN RECEPTACLE
TO GYROSYN COMPASS TRANSMITTER
TO LOCALIZER RECEIVER
LOCALIZER POINTER DEFLECTS TO RIGHT (FRONT VIEW)
TO GLIDE SLOPE RECEIVER
GLIDE SLOPE POINTER DEFLECTS DOWN.
TO LOCALIZER RECEIVER
LOCALIZER WARNING FLAG DEFLECTS BEHIND MASK WHEN RECEIVER IS OPERATING CORRECTLY.
TO GLIDE SLOPE RECEIVER
GLIDE SLOPE WARNING FLAG DEFLECTS BEHIND MASK WHEN RECEIVER IS OPERATING CORRECTLY.
TO LOCALIZER RECEIVER
AMBIGUITY INDICATOR INDICATES WHEN AIRCRAFT IS ON A" TO" OR "FROM" RADIAL.
TO LOCALIZER RECEIVER
RESOLVER SYNCHRO PROVIDES PHASE INFORMATION FOR LOCALIZER POINTER AND AMBIGUITY INDICATOR.
TO AUTO-PILOT COUPLER
TO GYROSYN COMPASS TRANSMITTER
REAR VIEW OF 3-PIN RECEPTACLE

Wiring Diagram

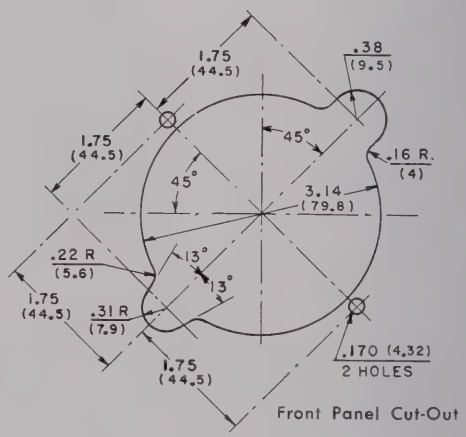

Front Panel Cut-Out

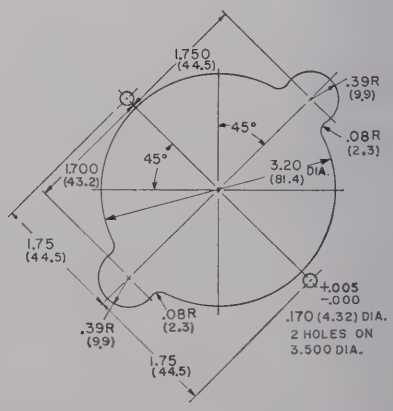

Rear Panel Cut-Out

DAYSTROM, INCORPORATED, Weston Instruments Division, Newark 12, N. J., U. S. A. PRINTED IN U S A

NDUSTRIAL MULTI-PURPOSE
OLT-AMMETER • MODEL 980
T SIZE INSTRUMENT • PANEL
ECTRICAL RECORDERS • LIG
-C AND D-C PORTABLE TEST
PORTABLE TEST INSTRUME
S • MINIATURE PORTABLE
AND CURRENT TRANSFORM
NSTRUMENTS • A-C CLAMP
LINE TEST EQUIPMENT • P
NSTRUMENTS • MINIATURE
HT MEASURING INSTRUMEN
INSTRUMENTS • A-C AND
NTS AND CURRENT TRANS
D D-C INSTRUMENTS AND
NDUSTRIAL MULTI-PURPOSE
OLT-AMMETER • MODEL 980
T SIZE INSTRUMENT • PANEL
ECTRICAL RECORDERS • LIG
A-C AND D-C PORTABLE
D-C PORTABLE TEST INSTR
S • INDUSTRIAL MULTI-PUR
OLT-AMMETER • MOD
T SIZE INSTRUME
ECTRICAL RECOI
A-C AND D-C
D-C PORTABLE
CURRENT TRANSFO
ISTRUMENTS • A-C CLAMP
NSTRUMENTS • MINIATURE
HT MEASURING INSTRUME
INSTRUMENTS • A-C AND
NTS AND CURRENT TRANS
D D-C INSTRUMENTS AND
NDUSTRIAL MULTI-PURPOSE
OLT-AMMETER • MODEL 980

FOR PRODUCTION TESTING MAINTENANCE AND SERVICE

INDICATE
WESTON
Instruments
SINCE 1888
RECORD — CONTROL

WESTON

This catalogue, as a convenience to you, provides a listing of a practical group of portable, multi-range and multi-purpose instruments suitable for production testing, maintenance and service, together with a comprehensive listing of panel instruments. They are representative of a very broad line of instruments meeting the requirements of practically any electrical or electronic measurements. Further information or catalogues covering the complete line of Weston Instruments are available through your Distributor or Weston Representative.

INDEX

	Page
A-C and D-C Portable Test Instruments	2-3
A-C and D-C Portable Test Instruments and Current Transformers	4-5
Miniature Portable A-C and D-C Instruments and Current Transformers	6-7
Miniature Electrical Recorders	8
Light Measuring Instruments	9
Test Equipment	10-11-12
Pocket Size Instrument	12
Panel Instruments	13-14-15
Industrial Multi-Purpose Instruments	16
A-C Clamp Volt-Ammeter	17
Pocket-Size Clamp Volt-Ammeter and Plug-In Adapter	18
You Might Want to Know	19-20-21

Weston A-C and D-C Portable

Model 931 D-C Instruments

Accurate within ½ of 1% Scale Length 4.04"
Size 5¼" x 5" x 3¼" Approx. Weight 2 lbs.
Self-Shielded Permanent Magnet Moving Coil Type

D-C VOLTMETERS

Self-contained up to 1000 volts inclusive.

Range	Scale Div.	Range	Scale Div.
75/30/7.5	150	500, 100, 10	100
150/15/3	150	750/300/150	150
300/150/3	150		

D-C AMMETERS

Self-contained up to 50 amperes inclusive.

Range	Scale Div.	Range	Scale Div.
1	100	15/3/0.15	150
5	100	25/10/2.5	100
15	150	30/15/3	150
30	150	50/5/0.5	100
5, 0.5, 0.05	100	50/25/10	100
10/1/0.1	100		

D-C MILLIAMMETERS

Range	Approx. Res. Ohms	Scale Divisions
1	93	100
15	1.0	150
150	----	150
3, 0.3, 0.03	----	150
150, 15, 1.5	----	150
1500, 150, 15	----	150
3000, 300, 30	----	150

Single range milliammeters with ranges above 30 ma are shunted and have a drop of 50 mv ± 5%.

D-C MICROAMMETERS

Range	Scale Div.	High Resistance Approx. Res. Ohms	Low Resistance Approx. Res. Ohms
30	150	2300	490
100	100	2000	60
200	100	600	15

Model 433 A-C Instruments

Accurate within ¾ of 1% Scale Length 4.04"
Size 5¼" x 5" x 3¼" Approx. Weight 2½ lbs.
Movable Iron Type

A-C AMMETERS

Power Consumption: 5 ampere range at 5 amperes, 60 cycles,— 0.50 watt, 0.52 volt-ampere.

Range	Scale Div.	Approx. Res. Ohms
1	100	0.48
1.5	150	0.20
2	100	0.12
3	150	0.053
5	100	0.020
10	100	0.007
15	150	0.0038
25	125	0.0016
30	150	0.00063
50	100	0.00038
10/5	100	0.0083, 0.028
20/10	100	0.004/0.0108
3/1.5/0.75	150	0.18/0.43/0.59
5/2.5/1	100	0.13/0.26/0.37
10/5/1	100	0.030/0.070/0.37
10/5/2.5	100	0.030/0.060/0.075
15/7.5/1.5	150	0.023/0.044/0.19
20/5/2	100	0.040/0.19/0.30
30/7.5/3	150	0.0090, 0.036, 0.040
50/20/5	100	0.0084/0.011/0.020
50/20/10	100	0.0073/0.0080/0.019

A-C MILLIAMMETERS

Range	Scale Div.	Approx. Res. Ohms
30	150	460
75	150	78
100	100	49
150	150	13
200	100	8.8
250	125	6.0
300	150	3.9
500	100	2.0
750	150	0.74

A matched set of portable instruments invaluable for highly accurate laboratory, production and general a-c and d-c testing. All have hand calibrated mirror scales and knife-edge pointers to eliminate parallax errors. They are moderately priced, compact and lightweight. Leather carrying cases are available.

Only The Most Commonly Used Ranges Are Listed . . . Any Practical Range Can Be Supplied

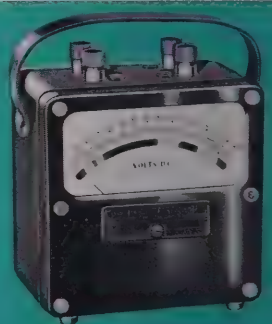

MODEL 931

PRICE LIST FOR CIRCULAR A-42
Production, Testing, Maintenance and Service Instruments

PLI-F 856

WESTON

Subject to Change Without Notice

ALL PRICES ARE LIST, F. O. B. FACTORY, NEWARK 5, NEW JERSEY, U. S. A.

Page 6

Model 281—D-C Voltmeters

Range	Price	Range	Price
1.5	$46.00	30/3/1.5	$53.50
3	46.00	30/15/3	53.50
7.5	46.00	50/5/2.5	53.50
10	46.00	50/25/5	53.50
15	46.00	100/25/2.5	53.50
50	46.00	100/50/5	53.50
75	46.00	150/15/1.5	54.25
150	46.75	150/15/3	54.25
400/40	68.50	150/30/3	54.25
500/50	70.00	150/60/3	54.25
25/10/2.5	53.50	150/75/3	54.25

Model 281—D-C Millivoltmeters

Range	Price	Range	Price
50	$47.50	500	$44.50
150	44.50		

Model 281—D-C Ammeters

Range	Price	Range	Price
1	$44.50	10/5/0.5	$52.00
5	44.50	10/2.5/1	52.00
10	44.50	15/3/0.15	52.00
15	44.50	15/3/1.5	52.00
30	44.50	25/2.5/0.5	52.00
*100	58.00	25/5/2.5	52.00
*150	58.00	25/10/5	52.00
5/2.5/0.25	52.00	30/3/1.5	52.00
10/1/0.1	52.00	30/15/3	52.00

*Provided with external shunt having a drop of 50 mv. For ranges higher than those listed, add price of shunt to the instrument base price of $47.50.

Model 281—D-C Milliammeters

Range	Price
1.5, 10, 50, 100, 500	$44.50
30/15/3, 50/10/1, 125/25/5, 150/15/1.5, 600/120/30	52.00

Page 6, cont.

Model 281—D-C Volt-Ammeters

Ranges		
Volts	Amperes	Price
30/3/1.5	30/3/1.5	$65.50
30/15/3	15/3/0.15	65.50
30/3/1.5	30/3/0.3	65.50
50/5/2.5	10/1/0.1	65.50
50/25/2.5	25/2.5/0.5	65.50
60/30/6	6/0.6/0.03	65.50
150/15/1.5	15/1.5/0.15	66.25
150/15/3	15/1.5/0.15	66.25
150/15/3	15a/150/15 ma	66.25
150/15/3	30/3/1.5	66.25
150/30/3	30/15/3	66.25
150/30/3	30/0.6/0.06	66.25
150/60/3	30/15/1.5	66.25
**30/3/.05	30/0.6/0.06	88.25
250/125/12.5	300/30/3	81.25
300/150/6	125/12.5/2.5 ma	82.00
600/150/15	600/150/15 ma	86.50

**A leather carrying case for the instrument, 3 shunts and leads is priced at $24.00. An external multiplier for 150 volts can be supplied at $12.50.

"Duplastic" Case for Model 281....$6.75

Page 13

Model 301—D-C Voltmeters

Range	Approx. Ohms per Volt	Price	1000 Ohms per Volt Price
1.5	62	$17.25	$18.00
3	62	17.25	18.00
5	62	17.25	18.00
8	62	17.25	18.00
10	62	17.25	18.00
15	62	17.25	18.00
30	62	17.25	18.00
50	200	17.25	18.00
80	200	17.25	18.00
100	200	18.00	18.75
150	200	18.75	19.50
200	250	19.50	20.25
300	-----	-----	21.75
500	-----	-----	26.25
800	-----	-----	30.75

Page 13, cont.

Model 301—D-C Ammeters

Range	Price
1	$17.25
1.5	17.25
2	17.25
3	17.25
5	17.25
10	17.25
15	17.25
30	17.25
50	17.25

Zero Center Ammeters	
5-0-5	$17.25
10-0-10	17.25
15-0-15	17.25
20-0-20	17.25
30-0-30	17.25
50-0-50	17.25

Page 14

Model 301—D-C Milliammeters

Range	Price	Range	Price
1	$17.25	30	$17.25
1.5	17.25	50	17.25
2	17.25	100	17.25
3	17.25	150	17.25
5	17.25	200	17.25
10	17.25	300	17.25
15	17.25	500	17.25
20	17.25		

Model 301—D-C Microammeters

Range	Approx. Res.	Price	Range	Approx. Res.	Price
100	600	$28.50	500	195	$21.00
200	55	27.50			

Page 14, cont.

Model 301

Rectifier Type A-C Voltmeters

Range	1000 Ohms per Volt	2000 Ohms per Volt
1	------	$29.50
1.5	------	29.50
3	$26.50	29.50
5	26.50	29.50
10	26.50	29.50
15	26.50	29.50
25	26.50	29.50
50	26.50	29.50
100	27.25	30.25
150	28.00	31.00
300	30.25	------

Model 301

Rectifier Type A-C Milliammeters

Range	Price	Range	Price
0.5	$29.50	2	$25.75
1	25.75	5	25.75

Model 301

Rectifier Type A-C Microammeters

Range	Price
500	$29.50

Model 301—VU Meters

Model 301 (Scale A)	$36.50
Model 301 (Scale B)	36.50

Page 3

Model 432—D-C and Single Phase A-C Wattmeters

FOR GENERAL USE

Volts		Amperes		Watts			
Normal	Max.	Normal	Max.	High Rg.	Low Rg.	Scale Div.	Price
150/75	200/100	1	1.5	150	75	75	$139.75
		2	3	300	150	75	139.75
		5	7.5	750	375	75	139.75
		10	15	1.5 KW	.75 KW	75	147.25
		20	30	3 KW	1.5 KW	75	147.25
		50	75	7.5 KW	3.75 KW	75	147.25
300/150	400/200	1	1.5	300	150	75	142.00
		2	3	600	300	60	142.00
		5	7.5	1.5 KW	.75 KW	75	142.00
		10	15	3 KW	1.5 KW	75	149.50
		20	30	6 KW	3 KW	60	149.50
		50	75	15 KW	7.5 KW	75	149.50

Page 3, cont.

Y-Boxes For Model 432 Wattmeters

Type Box	Normal Voltage of Instrument	Y-Box Multiplying Constant	Normal Line Voltage With Y-Box	Maximum Voltage With Y-Box	Price
51	75	3	150	170	$41.25
52	150	3	300	340	41.25
52	150	4	400	450	41.25
53	150	5	500	550	41.25
53	150	6	600	650	41.25

All orders for Y-Boxes must give the instrument potential range with which the box will be used and the line voltage of the 3 phase system to be measured.

All orders for Y-Boxes to be used with meters already in possession of the purchaser must give the serial number of the instrument, since the box is for use with a specific instrument only.

Page 2

Model 433—A-C Ammeters

Range	Price
1, 1.5, 2, 3, 5, 10	$ 70.50
15, 25, 30, 50	76.50
10/5	85.50
20/10	91.50
3/1.5/0.75, 5/2.5/1, 10/5/1, 10/5/2.5	130.50
15/7.5/1.5, 20/5/2, 30/7.5/3, 50/20/5, 50/20/10	136.50

Page 2, cont.

Model 433—A-C Milliammeters

Range	Price
30, 75, 100, 150, 200, 250, 300, 500, 750	$70.50

Page 3

Model 433—A-C Voltmeters

Range	Price	Range	Price
10	$72.00	20/10	$79.50
15	72.00	30/15	79.50
30	72.00	60/30	79.50
50	72.00	150/15	80.25
75	72.00	150/75	80.25
125	72.75	300/150	82.50
150	72.75	450/300/150	101.25
250	74.25	600/300/150	103.50
300	75.00	750/300/150	105.75
10/5	79.50		

Model 455—A-C and D-C Voltmeters

Supplied in most ranges listed for Model 433 although their resistance may not correspond. Prices for equivalent ranges for frequency span of 25-125 cycles are $66.00 higher. For other frequency spans, correspondence is invited.

Page 5

Model 461 Current Transformer

Ranges, Amperes	Type 1	Type 2	Type 5
800/400/200/100/50/20/10 Pri. to 5 Sec.	$132.00	$169.00	.....
1000/500/250/100/50/25/10 Pri. to 5 Sec.	132.00	169.00	.....
500/250/100/50/25/10/5/2.5/1/0.5 Pri. to 5 Sec.	.....	.....	$182.00

Page 14

Model 476—A-C Voltmeters

Range	Price	Range	Price
1.5	$17.25	50	$17.25
3	17.25	100	18.00
5	17.25	130	18.75
8	17.25	150	18.75
10	17.25	250	20.25
15	17.25	300	21.00
30	17.25	500	24.00

Page 14, cont.

Model 476—A-C Ammeters

Ranges	Price
1, 1.5, 2, 3, 5, 10, 15, 30, 50	$17.25

Page 14

Model 476—A-C Milliammeters

Ranges	Price
15, 25, 50, 100, 250, 500	$17.25

Page 7

Model 489—D-C Voltmeters

125 ohms per volt

Range	Price
150/7.5	$30.50
200/8	31.25

1000 ohms per volt

Range	Price
200/8	$32.75
150/7.5/3	34.25
750/250/10	43.25

Model 489—D-C Ammeters

Range	Price
1	$27.50
30	27.50
15/3	29.75

Model 489—D-C Milliammeters

Range	Price
150/15	$28.25
150/30	28.25

Leather Case for Model 489 .....$5.00

Page 7, cont.

Model 528—A-C Voltmeters

Range	Price	Range	Price
150/15	$29.75	150/15/3	$32.75
300/150	32.00	150/8/4	37.25
600/150	36.50	300/8/4	39.50
600/300	36.50		

Model 528—A-C Ammeters

Range	Price	Range	Price
1	$26.00	50	$26.00
3	26.00	15/3	32.00
5	26.00	15/5	36.50
10	26.00	30/3	32.00
15	26.00	30/5	36.50
30	26.00		

Model 528—A-C Milliammeters

Range	Price	Range	Price
15	$26.00	100	$26.00
50	26.00	500	26.00

Leather Case for Model 528 .....$5.00

Page 7

Model 539 Miniature Current Transformer

Ranges, Amperes	Price
200/100/50/20/10/5/2 Pri. to 1 Sec.	$ 82.50

Page 12

Model 564 Type 3C (Inc. Test Leads) $64.50

Page 9

Model 614 Foot-Candle Meter

Model 614 0-100/250/500 foot-candles (with VISCOR® and cosine correction filters) $94.00

Model 614 0-60/120/600 foot-candles (with VISCOR® filter) 91.00

Page 17

Model 633 Type VA-1 (Incl. Potential Leads) $114.50
Model 633 Type A-1 ..... 106.50
Model 633 Type A-2 ..... 106.50
Model 633 Type A-3 ..... 114.50
Model 9958, 50 Foot Extension Cable, Plug and Receptacle for Model 633 Types A-1, A-2, A-3 ..... 72.00
Leather Carrying Case (Model 633 Types VA-1, A-1, A-2, A-3) 13.50
Leather Carrying Case (Model 9958—Cable, Plug and Receptacle) 22.50

Page 16

Model 639 Type 2 ..... $763.00

Page 9

Model 703 Sightmeters

Model 703 Type 7 Sightmeter, 0-100 foot-candles (with VISCOR® and cosine correction filters) $45.00
Model 703 Type 6A Sightmeter, 0-75 foot-candles (with VISCOR® filter) 42.00
Model 703 Type 3A Sightmeter, 0-75 foot-candles (Unfiltered) 30.00
Model 9924 Multiplier Disc (x10), not usable with cosine corrected instruments 1.50
Model 9959 Leather Carrying Case 3.00

Model 749 Clamp Volt-Ammeter

Model 749 ..... $49.00

Page 9

Model 756 Illumination Meter

0-20/100/500 foot candles (with VISCOR® and cosine correction filters) including leather carrying case $294.00
0-20/50/500 foot-candles (with VISCOR® filter) including leather carrying case 285.50
0-6/12/60/120/600 foot-candles (with VISCOR® filter) including leather carrying case 338.00

Page 16

Model 785 Type 6 in Oak Carrying Case $170.25
Model 785 Type 6 in Steel Case for Bench Use 140.25

Page 4

Model 901—D-C Voltmeters

Range	1000 Ohms Per Volt
0.2-0-2.8	$133.50
150	134.25
150/15/3	149.25
300/150/3	151.50
750/300/150	158.25

Model 901—D-C Volt-Ammeters

750/300/150 Volts (200 ohms/volt) and 50 mv. Ampere ranges obtained with external shunts of ranges required. Price less shunts but with 5' leads, $165.75.

Model 901—D-C Ammeters

Range	Price	Range	Price
5	$136.50	10/5/1	$151.50
50	136.50	15/7.5/3	151.50
2/1/.5	151.50	30/7.5/1.5	151.50
5/2/1	151.50	50/25/10	151.50

Also available for use with external 50 mv. shunts and 5-foot leads. Price $136.50.

Page 4, cont.

Model 901—D-C Milliammeters

Range	Price	Range	Price
200μa	$138.00	300	$132.00
500μa	138.00	30/7.5/1.5	147.00
1	132.00	750/300/30	147.00

Page 5

Model 904—A-C Voltmeters

Range	Price	Range	Price
150	$122.75	600/300/150	$144.50
300	125.00	750/300/150	147.75
300/150	132.50		

Model 904—A-C Ammeters

Range	Price	Range	Price
5	$120.50	2/1	$143.00
10	120.50	5/2.5	143.00
25	120.50	10/5	143.00
1/.5	143.00		

Model 904—A-C Milliammeters

Range	Price	Range	Price
50	$120.50	500	$120.50
150	120.50	750	120.50

Page 5

Model 905—A-C and D-C Single Phase Wattmeters

Volts		Amperes		Watts			
Normal	Max.	Normal	Max.	High Range	Low Range	Scale Div.	Price
100/50	150/75	10	20	1 KW	.5 KW	100	$172.50
		5	10	500	250	100	165.00
200/100	300/150	10	20	2 KW	1 KW	100	174.00
		5	10	1 KW	.5 KW	100	166.50
100/50	150/75	10/5	20/10	1000/500	500/250	100	191.25
		5/2.5	10/5	500/250	250/125	125	183.75
200/100	300/150	10/5	20/10	2/1 KW	1/.5 KW	100	192.75
		5/2.5	10/5	1000/500	500/250	100	185.75

Page 2

Model 931—D-C Voltmeters

Range	1000 Ohms Per Volt	Range	1000 Ohms Per Volt
75/30/7.5	$97.00	500/100/10	$103.00
150/15/3	97.75	750/300/15	106.750
300/150/3	100.00		

Model 931—D-C Ammeters

Range	Price
1, 5, 15, 30	$ 85.00
5/0.5/0.05, 10/1/0.1, 15/3/0.15	100.00
25/10/2.5, 30/15/3, 50/5/0.5, 50/25/10	100.00

Also available for use with external 50 mv. shunts and 5-foot leads. Price is $85.00.

Model 931—D-C Milliammeters

Range	Price	Range	Price
1	$80.50	150/15/1.5	$95.50
15	80.50	1500/150/15	100.00
150	80.50	3000/300/30	100.00
3/0.3/0.03	119.50		

Model 931—D-C Microammeters

Range	High Resistance Price	Low Resistance Price
30	$104.50	$112.00
100	97.00	104.50
200	89.50	97.00

Page 14

Model 962
Rectifier Type A-C Voltmeters

Range	1000 Ohms per Volt	2000 Ohms per Volt
1	.....	$47.50
1.5	$44.50	47.50
3	44.50	47.50
5	44.50	47.50
10	44.50	47.50
15	44.50	47.50
50	44.50	47.50
100	45.25	48.25
150	46.00	49.00
300	48.25	51.25

Model 962
Rectifier Type A-C Milliammeters

Range	Price	Range	Price
1	$36.25	5	$36.25
2	36.25		

Page 15

Model 962
Rectifier Type A-C Microammeters

Range	Price	Range	Price
100	$49.00	500	$40.00
200	40.00		

Page 15, cont.

Model 962—Type 30 VU Meters

Scale A or B $46.50

Model 964—A-C Voltmeters

Range	Price	Range	Price
1.5	$31.50	50	$31.50
3	31.50	100	32.25
5	31.50	130	33.00
8	31.50	150	33.00
10	31.50	250	34.50
15	31.50	300	35.25
30	31.50	500	38.25

Model 964—A-C Ammeters

Range	Price	Range	Price
1	$31.50	10	$31.50
1.5	31.50	15	31.50
2	31.50	20	31.50
3	31.50	30	31.50
5	31.50	50	31.50
8	31.50		

Model 964—A-C Milliammeters

Range	Price	Range	Price
15	$31.50	100	$31.50
25	31.50	250	31.50
50	31.50	500	31.50

Models 1301 and 1302 are supplied in 3½" round or rectangular flush Bakelite cases. These self-shielded instruments can be mounted interchangeably on magnetic or non-magnetic panels and are supplied with solder type terminals.

Model 1301—D-C Instrument

Accurate within 2% Scale Length 2.36"
Core Magnet Moving Coil

D-C Voltmeters

Range	Scale Div.	Price
1.5	75	$13.25
3	60	13.25
5	50	13.25
10	50	13.25
15	75	13.25
30	60	13.25
50	50	13.25
100	50	13.25
150	75	13.25
200	40	13.75
300	60	13.75

Sensitivity is approximately 1000 ohms per volt.

D-C Ammeters

Range (Self-contained)	Scale Div.	Price
1	50	$12.75
2	40	12.75
3	60	12.75
5	50	12.75
10	50	12.75
15	75	13.75
30	60	13.75
50	50	13.75

Ranges above 50 amperes require external shunts.

Page 15, cont.

D-C Milliammeters

Range	Scale Div.	Approx. Res.	Price
1	50	88	$12.75
3	60	18	12.75
5	50	8	12.75
10	50	1.1	12.75
15	75	1.1	12.75
20	40	1.1	12.75
30	60	1.0	12.75
50	50	2.0	12.75
100	50	1	12.75
200	40	0.5	12.75
300	60	0.33	12.75
500	50	0.2	12.75

D-C Microammeters

Range	Scale Div.	Approx. Res.	Price
100	50	1700	$15.75
200	40	600	13.25
500	50	230	13.25

Model 1302
A-C Rectifier Type Instruments

Accurate within 3% of full scale on wave forms closely approximating sine wave at ordinary room temperature.

Rectifier Type A-C Voltmeters

Range	Scale Div.	1000 Ω/v	2000 Ω/v
1.5	75	-------	$19.25
3	60	$18.75	19.25
5	50	18.75	19.25
10	50	18.75	19.25
15	75	18.75	19.25

Can be supplied in most ranges with a sensitivity of 1000 or 2000 ohms per volt.

Rectifier Type A-C Milliammeters

Range	Scale Div.	Approx. Res.	Price
1	50	470	$18.75
5	50	150	18.75

Rectifier Type A-C Microammeters

Range	Scale Div.	Approx. Res.	Price
200	40	2400	$21.25
500	50	750	18.75

Page 10

Model 980 ..... $ 46.75
Model 981 Type 3 ..... 239.50

Page 11

Model 982 ..... $ 76.50
Model 983 ..... 395.50

Page 12

Model 984 ..... $199.50
Model 985 ..... 199.50

Page 8

Model 6401 D-C

100 Charts and Ink Set are furnished with each instrument.

	Chart Drive Spring Wound	Electric
0-1 Milliampere D-C	$160.00	$175.00
0-2 Milliamperes D-C	150.00	165.00
0-150 V. D-C (500 Ω/v)	160.00	175.00
0-300 V. D-C (500 Ω/v)	165.00	180.00
0-150 V. D-C (1000 Ω/v)	170.00	185.00
0-300 V. D-C (1000 Ω/v)	175.00	190.00
0-600 V. D-C	185.00	200.00
0-5 Amperes D-C	175.00	190.00
0-100 Millivolts D-C	165.00	180.00

Page 8, cont.

Model 6402 A-C

100 Charts and Ink Set are furnished with each instrument.

	Chart Drive Spring Wound	Electric
0-150 Volts A-C	$195.00	$210.00
0-300 Volts A-C	195.00	210.00
0-150/300 Volts A-C	225.00	240.00
80-130 Volts A-C	210.00	235.00
0-600 Volts A-C	215.00	230.00
0-5 Amperes A-C	195.00	210.00

ACCESSORIES

Wall Bracket—D-147304 ..... $4.50

WESTON ELECTRICAL INSTRUMENT CORPORATION

A Subsidiary of Daystrom, Incorporated

Newark 5, New Jersey, U.S.A.

PRINTED IN U. S. A.

Test Instruments

WESTON

A-C VOLTMETERS

Power Consumption: 150 volt range at 115 volts, 60 cycles — 2.5 watts. 2.5 volt-amperes.

Range	Scale Div.	Approx. Res. Ohms
10	100	80
15	150	168
30	150	425
50	100	1140
75	150	2680
125	125	4400
150	150	5300
250	125	18,200
300	150	22,000
10/5	100	40/20
20/10	100	160/80
30/15	150	336/168
60/30	150	850/425
*150/15	150	5300/530
150/75	150	5300/2680
300/150	150	22,000/11,000
450/300/150	150	33,000/22,000/11,000
†600/300/150	150	44,000/22,000/11,000
†750/300/150	150	55,000/22,000/11,000

*The low range of this combination has an accuracy of 3%.
† These triple range voltmeters have an extension on the case to accommodate the additional resistance necessary.

Model 455
A-C and D-C Voltmeters

Accurate within ½ of 1 % Scale Length 4.04"
Size 5¼" x 5" x 3¼" Approx. Weight 2½ lbs.

Used on d-c and a-c of frequencies from 25 to 125 cycles. Single and double range instruments can be provided for frequencies of 25 to 1,000 cycles; higher frequencies up to 2,500 cycles are available at a surcharge. Similar in appearance to Model 433.

Model 432 D-C and Single Phase A-C Wattmeters

Accurate within ½ of 1 % Scale Length 4.04"
Size 5¼" x 5" x 3¼" Approx. Weight 3¼ lbs.
Electrodynamometer Type

Power Consumption: Potential circuit at 115 volts, 60 cycles — 1.2 watts, 1.2 volt-amperes. Current circuit at 5 amperes, 60 cycles — 0.65 watt, 0.68 volt-amperes.

FOR GENERAL USE

Volts Normal	Volts Max.	Amperes Normal	Amperes Max.	Watts High Rg.	Watts Low Rg.	Scale Div.
150/75	200/100	1	1.5	150	75	75
		2	3	300	150	75
		5	7.5	750	375	75
		10	15	1.5 KW	.75 KW	75
		20	30	3 KW	1.5 KW	75
		50	75	7.5 KW	3.75 KW	75
300/150	400/200	1	1.5	300	150	75
		2	3	600	300	60
		5	7.5	1.5 KW	.75 KW	75
		10	15	3 KW	1.5 KW	75
		20	30	6 KW	3 KW	60
		50	75	15 KW	7.5 KW	75

Y BOXES FOR MODEL 432 WATTMETERS

A Model 432 single phase a-c wattmeter can be used to measure the power in a balanced 3 phase, 3 wire system by means of an external Y-Box.

Type Box	Normal Voltage of Instrument	Y-Box Multiplying Constant	Normal Line Voltage With Y-Box	Maximum Voltage With Y-Box
51	75	3	150	170
52	150	3	300	340
52	150	4	400	450
53	150	5	500	550
53	150	6	600	650

Note: All orders for Y-Boxes must give the instrument potential range with which the box will be used and the line voltage of the 3-phase system to be measured.

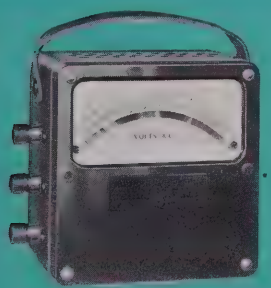

MODEL 433

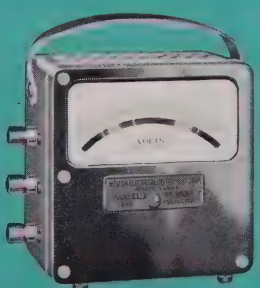

MODEL 455

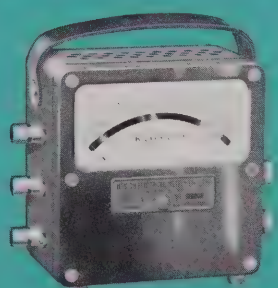

MODEL 432

Weston A-C and D-C Portable Test

MODEL 901

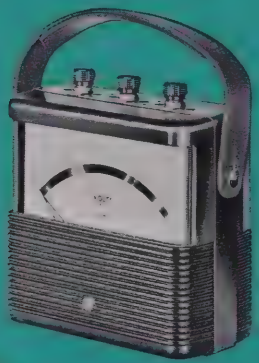

MODEL 904

MODEL 905

MODEL 461

These matched instruments are used for general testing where easily read scales and high shielding are desired. Modern in design, they feature a curved, shadow reducing, wide angle window that is non-breakable and specially treated against electrostatic effects. Long 5½" hand calibrated mirror scales, combined with knife edge pointers, eliminate parallax errors. Leather carrying cases available.

Only The Most Commonly Used Ranges Are Listed . . . Any Practical Range Can Be Supplied

Model 901 D-C Instruments

Accurate within ½ of 1 % **Scale Length 5.5"**
Size 7½" x 7¼" x 3⅝" **Approx. Wt. 3¾ lbs.**
Self-Shielded Permanent Magnet Moving Coil Type

D-C VOLTMETERS

Maximum self-contained range 1000 volts.

Range	Scale Div.	Range	Scale Div.
0.2-0-2.8	150	300/150/3	150
150	150	750/300/150	150
150/15/3	150		

D-C VOLT-AMMETERS

750/300/150 volts (200 ohms/volt) and 50 mv. Ampere ranges obtained with external shunts of ranges required and 5′ leads.

D-C AMMETERS

Self-contained up to and including 50 amperes in single or triple range combinations.

Range	Scale Div.	Range	Scale Div.
5	100	10/5/1	100
50	100	15/7.5/3	150
2/1/.5	100	30/7.5/1.5	150
5/2/1	100	50/25/10	100

D-C MILLIAMMETERS

Range	Scale Div.	Approx. Res. Ohms
200μα	100	900
500μα	100	480
1	100	95
300	150	.170
30/7.5/1.5	150	3.3/12/23
750/300/30	150	.067/.168/1.68

Instruments and Current Transformers

Model 902
A-C Rectifier Type Instruments

Essentially the Model 901 with a copper oxide rectifier. Rectifier type instruments inherently indicate average values, however, they are usually calibrated in terms of the rms values of a sine wave. Supplied as Voltmeters and Milliammeters. Correspondence invited.

Model 904 A-C Instruments

Accurate within ½ of 1 % Scale Length 5.5"
Size 7½" x 7¼" x 3⅝" Approx. Wt. 4¾ lbs.
Radial Vane, Moving Iron Type

A-C VOLTMETERS

Power Consumption: 15 volt range at 115 volts, 60 cycles — 2.2 watts, 2.2 volt-amperes. Frequency 25 to 125 cycles.

Range	Scale Div.	Approx. Res. Ohms
150	150	6800
300	150	25000
300/150	150	13600/6800
*600/300/150	150	27200/13600/6800
*750/300/150	150	34000/13600/6800

*Supplied with non-locking contact key in high range. This high range for intermittent duty only.

A-C AMMETERS

Power Consumption: 5 ampere range at 5 amperes, 60 cycles — 0.38 watt, 0.44 volt-ampere. Frequency 25 to 500 cycles.

Range	Scale Divisions	Approx. Res. Ohms	Approx. Inductance Milli-Henries
5	100	0.013	0.026
10	100	0.0060	0.0061
25	125	0.0025	0.00097
1/.5	100	0.30/1.2	0.61/2.4
2/1	100	0.085/0.34	0.15/0.61
5/2.5	100	0.011/0.039	0.027/0.11
10/5	100	0.0063/0.022	0.0061/0.024

A-C MILLIAMMETERS

Frequencies from 25 to 500 cycles.

Range	Scale Divisions	Approx. Res. Ohms	Approx. Inductance Milli-Henries
50	100	142	230
150	150	16	32
500	100	1.1	2.3
750	150	0.52	1.1

Model 905 A-C and D-C Single Phase Wattmeters

Accurate within ½ of 1 % Scale Length 5.5"
Size 7½" x 7¼" x 3⅝" Approx. Weight 5 lbs.

Power Consumption: Potential circuit at 115 volts, 60 cycles — 2.7 watts, 2.7 volt-amperes. Current circuit at 5 amperes, 60 cycles — 0.81 watt, 0.83 volt-ampere. Frequency 25 to 60 cycles.

Volts		Amperes		Watts		
Normal	Max.	Normal	Max.	High Range	Low Range	Scale Div.
100/50	150/75	10	20	1 KW	.5 KW	100
		5	10	500	250	100
200/100	300/150	10	20	2 KW	1 KW	100
		5	10	1 KW	.5 KW	100
100/50	150/75	10/5	20/10	1000/500	500/250	100
		5/2.5	10/5	500/250	250/125	125
200/100	300/150	10/5	20/10	2/1 KW	1/.5 KW	100
		5/2.5	10/5	1000/500	500/250	100

Current Transformers

Used with a-c instruments where higher ranges are required. Four self-contained primary ranges are brought out to a switch or to binding posts.

Model 461
Current Transformer

A general purpose current transformer providing wide varieties of ranges in three types, with adequate accuracy for most industrial measurements. Contained in a black bakelite case.

Size 7.97" x 6.63" x 2.75" Approx. Weight { Type 1 — 8 lbs. / Type 2 — 8.4 lbs. / Type 5 — 7.8 lbs.

Inserted Primary Opening 2.12" Diameter

Type 1 is primarily for use with ammeters. Type 2 is preferable for wattmeters as well as ammeters. Type 5 is similar to Type 2 but designed primarily to standardize ammeters, particularly in the lower ranges, but can be used with wattmeters and ammeters to measure load currents and power.

RANGES, AMPERES

*800/*400/*200/100/50/20/10 Pri. to 5 Sec.
*1000/*500/*250/100/50/25/10 Pri. to 5 Sec.
*500/*250/*100/50/25/10/5/2.5/1/0.5 Pri. to 5 Sec.

*These ranges are obtained by inserting one, two, etc. turns, respectively, of the primary through the core opening; other ranges are on binding posts.

Weston Miniature Portable A-C and

Model 281 D-C Instruments

Accurate within 1 % — Scale Length 2.97"
Size 4 2/5" x 4 3/5" x 1 1/2" — Approx. Wt. 14 ounces
Core Magnet Moving Coil Type

D-C VOLTMETERS

Resistance of approximately 100 ohms per volt.

Range	Scale Div.	Range	Scale Div.	Range	Scale Div.
1.5	75	150	75	50/25/5	50
3	60	*400/40	40	100/25/2.5	50
7.5	75	*500/50	50	100/50/5	50
10	50	25/10/2.5	50	150/15/1.5	75
15	75	30/3/1.5	60	150/15/3	60
50	50	30/15/3	60	150/30/3	60
75	75	50/5/2.5	50	150/60/3	60
				150/75/3	75

* Push button for low range. Sensitivity 1000 ohms per volt.
All voltmeters listed are self-contained.

D-C MILLIVOLTMETERS

Range	Scale Div.
*50	50
150	75
500	50

* Supplied with 5' leads.

D-C AMMETERS

Range	Scale Div.	Range	Scale Div.
1	50	10/1/0.1	50
5	50	10/5/0.5	50
10	50	10/2.5/1	50
15	75	15/3/0.15	60
30	60	15/3/1.5	60
*100	50	25/2.5/0.5	50
*150	75	25/5/2.5	50
5/2.5/0.25	50	25/10/5	50
		30/3/1.5	60
		30/15/3	60

* Provided with external shunt having a drop of 50 mv and 5' leads.

D-C MILLIAMMETERS

Range	Approx. Res.	Scale Div.	Range	Approx. Res.	Scale Div.
1.5	45	75	30/15/3	.....	60
10	1.6	50	50/10/1	.....	50
50	2.0	50	125/25/5	.....	50
100	1.0	50	150/15/1.5	.....	75
500	0.2	50	600/120/30	.....	60

Milliammeters with ranges above 30 milliamperes are shunted and have a drop of approximately 100 millivolts.

D-C VOLT-AMMETERS

Ranges		Scale Div.
Volts	Amperes	
30/3/1.5	30/3/1.5	60
30/15/3	15/3/0.15	60
30/3/1.5	30/3/0.3	60
50/5/2.5	10/1/0.1	50
50/25/2.5	25/2.5/0.5	50
60/30/6	6/0.6/0.03	60
150/15/1.5	15/1.5/0.15	75
150/15/3	15/1.5/0.15	60
150/15/3	30/3/1.5	60
150/15/3	30/15/3	60
150/30/3	30/15/1.5	60
150/30/3	30/0.6/0.06	60
150/60/3	30/0.6/0.06	60
*30/3/.05	300/30/3	60
†250/125/12.5	125/12.5/2.5 ma	50
†300/150/6	15a/150/15 ma	60
†600/150/15	600/150/15 ma	60

* Recommended for testing automotive starting, lighting, ignition and battery charging equipment. External shunts and leads supplied for use with 50 mv instrument range. A leather carrying case for the instrument, 3 shunts, and leads are available.

An external multiplier for 150 volts can also be supplied.

† The voltage sensitivity is 1000 ohms per volt. These instruments have been particularly selected for automobile radio set servicing, portable battery set servicing, and for the servicing of larger radio sets or industrial electronic devices.

Dependable, lightweight portables contained in black bakelite cases and ruggedly built for long service. Model 281, used for precision testing, has hand calibrated scales, with knife edge pointers, and a mirror combined to eliminate parallax errors. Model 528 A-C is the companion to Model 489 D-C. These instruments are used for general testing and laboratory work where accuracy of a precision portable is not required. "Duplastic" carrying case available for Model 281; leather case for Models 489 and 528.

MODEL 281

Only The Most Commonly Used Ranges Are Listed . . . Any Practical Range Can Be Supplied

D-C Instruments and Current Transformers

Model 528 A-C Instruments

Accurate within 2 % Scale Length 2.03"
Size 3 27/32" x 3 5/32" x 2 1/8" Approx. Wt. 11 ounces
Movable Iron Type

A-C VOLTMETERS

For use on frequencies from 25 to 125 cycles.

Range	Approximate Res. Ohms	Scale Divisions
150/15	7800/780	30
300/150	31,600/15,800	30
600/150	100,000/25,000	30
600/300	100,000/50,000	30
150/15/3	10,000/150/30	30/30
150/8/4	10,000/80/40	30/40
300/8/4	43,000/80/40	30/40

A-C AMMETERS

For use on frequencies from 25 to 500 cycles.

Range	Approximate Res. Ohms	Scale Divisions
1	0.22	50
3	0.025	30
5	0.011	50
10	0.0046	50
15	0.0036	30
30	0.0020	30
50	0.0017	50
15/3	0.0058/0.053	30
15/5	0.0058/0.024	30/50
30/3	0.0018/0.091	30
30/5	0.0018/0.030	30/50

A-C MILLIAMMETERS

For use on frequencies from 25 to 500 cycles.

Range	Approximate Res. Ohms	Scale Divisions
15	2300	30
50	171	50
100	34	50
500	1.14	50

Model 489 D-C Instruments

Accurate within 2 % Scale Length 2.36"
Size 3 27/32" x 3 5/32" x 1 29/32" Approx. Wt. 11 ounces
Permanent Magnet Moving Coil Type

D-C VOLTMETERS

125 Ohms Per Volt Range	Scale Div.	1,000 Ohms Per Volt Range	Scale Div.
150/7.5	75	200/8	40
200/8	40	150/7.5/3	75
		750/250/10	75/50

D-C AMMETERS

Range	Scale Div.
1	50
30	60
15/3	75/60

D-C MILLIAMMETERS

Range	Approximate Res. Ohms	Scale Division
150/15	0.7/4.1	75
150/30	0.7/2.6	60

Model 539 Miniature Current Transformers

Accurate within 1 % Core Opening 1 1/2"
Size 5 1/4" x 4 1/8" x 1 7/8" Approx. Weight 3 lbs.

This is a small, lightweight, inexpensive transformer for use where only moderate accuracy is required with low burden ammeters having a range of one ampere. Contained in a black bakelite case.

RANGES, AMPERES

*200/*100/*50/20/10/5/2 primary to one secondary

* These ranges are obtained by inserting one, two, etc. turns respectively, of the primary through the core opening; other ranges are on binding posts selected through a switch.

MODEL 528

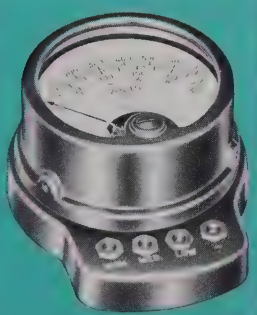

MODEL 489

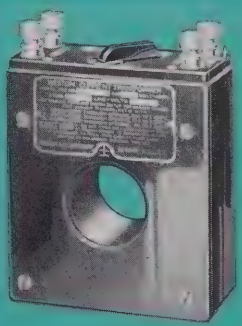

MODEL 539

Weston Miniature Electrical Recorders

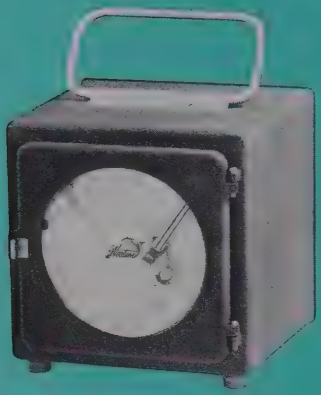

MODEL 6401

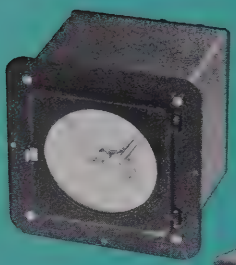

FLUSH MOUNTING

WALL BRACKET MOUNTING

Portable, lightweight, direct-writing instruments designed for voltage and current records. Used to record ampere-hour demand, in power company surveys, as a guide to transformer need; also used to check reports of low voltage, excessive motor loads, or unbalanced conditions, etc. Embodies the core magnet mechanism which provides excellent shielding and high torque-to-weight ratio.

Model 6401 D-C Instruments

Available in current ranges from 1 milliampere to 5 amperes and in voltage ranges from 100 millivolts to 300 volts, self-contained. Higher ranges can be obtained through the use of accessory shunts or multipliers.

Model 6402 A-C Instruments

Available in current ranges up to 5 amperes, self-contained, and in voltage ranges up to 300 volts, self-contained. Higher voltage ranges can be obtained through the use of external multipliers; higher current ranges with a Model 604 Type 1 Current Transformer.

STANDARD RANGES (Other Ranges Available)

Model 6401 d-c

0-1 Milliampere (approx. 1800 Ω) d-c
0-2 Milliamperes (approx. 440 Ω) d-c
0-150 Volts d-c (500 Ω/v); 0-300 Volts d-c (500 Ω/v)
0-150 Volts d-c (1000 Ω/v); 0-300 Volts d-c (1000 Ω/v)
0-600 Volts d-c (external multiplier for use with 0-300 volt instruments)
Can be furnished with minimum d-c voltage range of 0-3 volts with approximately 200 ohms per volt.
0-5 Amperes d-c (self-contained)
0-100 Millivolts d-c (for use with 100 mv shunts. D-8986 Shunt leads, 5 ft. long, (.065 ohm) normally supplied.)
0-50 Millivolts d-c (for use with 50 mv shunts. D-8986 Shunt leads 5 ft. long (.065 ohm) normally supplied.)
Can be furnished calibrated for use with Weston D-C Tachometer Generators.
100 Charts and ink set are furnished with each instrument.

Model 6402 a-c

0-150 Volts a-c; 0-300 Volts a-c
0-150/300 Volts a-c; 80-130 Volts a-c
0-600 Volts a-c (external multiplier for use with 0-300 volt instruments)
0-5 Amperes a-c (self-contained)
100 Charts and ink set are furnished with each instrument.

ACCESSORIES: Wall Bracket—D-147304

SPECIFICATIONS FOR MODEL 6401 AND MODEL 6402

Size:
Portable—6¾" x 6¼" x 7"
Wall Mounted—6½" x 6½" x 7½"
Flush Mounted—7¼" x 7¼" x 6½"

Approx. Weight: 7½ lbs.

ACCURACY: Model 6401 d-c ± 2% of full scale.
Model 6402 a-c ± 3% of full scale.

CHART: Pen arc length, 1.6". Chart 4" in diameter.

INK SET: D-154448.

RECORD: Ink on paper chart, lightweight "V" pen directly operated by movement.

MOVEMENT: CORMAG type magnet system, inherently shielded. Core diameter, 1.67".

CHART DRIVES: Spring wound or 115 volt 60 cycle a-c electric chart drive (approx. 6 ft. line cord incl.). Rotation 24 hours or 7 days; other speeds available on application.

Weston Light Measuring Instruments

Completely self-contained and permanently calibrated instruments for factory, home and office lighting surveys. Invaluable for architects, liability insurance groups, industrial safety men, lighting engineers, etc.

Model 614 Foot-Candle Meter

Size 7 3/8" x 3 3/8" x 2 1/4" Scale Length 2.36"
Approx. Weight 1 lb., 13 ozs.

For general commercial lighting surveys and measurements requiring a wide range of light values. No correction factors are necessary.

RANGES

0-100/250/500 foot-candles (with VISCOR† and cosine correction filters)

0-60/120/600 foot-candles (with VISCOR† filter)

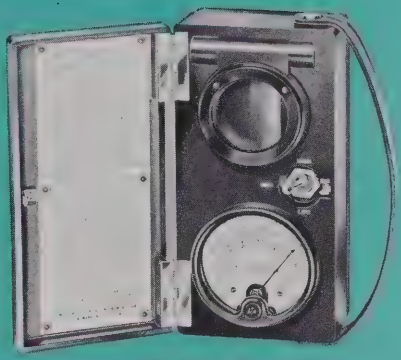

MODEL 614

Model 703 Sightmeters

Size 4 5/8" x 2 5/8" x 1 5/16" Scale Length 1.57"
Approx. Weight 10 ounces

A pocket sized meter for checking the amount of light at work positions. Ideal for selling home lighting equipment such as lamps and reflectors.

RANGES

Model 703 Type 7, 0-100 foot-candles (with VISCOR† and cosine correction filters)

Model 703 Type 6A, 0-75 foot-candles (with VISCOR† filter)

Model 703 Type 3A, 0-75 foot-candles (unfiltered)

The Model 9924 Multiplier Disc used over the PHOTRONIC* Cell will extend the range ten times its normal full scale value. The Multiplier Disc (X10) is not usable with cosine corrected instruments.

MODEL 703

Model 756 Illumination Meter

Size 6 1/32" x 5 1/16" x 3 1/2" Scale Length 4.04"
Approx. Weight 4-5 lbs.

A broad range instrument for light measurements requiring a high degree of accuracy. Used for research or routine work or as a master instrument for checking other light measuring devices.

RANGES

0-20/100/500 foot-candles (with VISCOR† and cosine correction filters)

0-20/50/500 foot-candles (with VISCOR† filter)

0-6/12/60/120/600 foot-candles (with VISCOR† filter)

MODEL 756

*PHOTRONIC, †VISCOR } registered trademarks

MODEL 981 TYPE 3

Weston Te

A diversified group of highly a
to meet the many service problems e
cations as well as TV and radio se
the most simple, accurate and rapi

Model 981 Tubechecker (TYPE 3)

Size 17½" x 13¼" x 6" Approx. Wt. 23½ lbs.

For industrial, laboratory and general testing of receiving tubes, voltage regulator tubes and low power thyratron tubes. Provides meter measurement of leakage resistance as high as 5 megohms between tube elements, nine single circuit, twelve position selector switches protect against obsolescence, three toggle switches make it possible to check and compare sections of twin-section tubes at only one setting of the selector switch.

FILAMENT VOLTAGES: 0.6a, 0.65, 1.1, 1.5, 2, 2.5, 3.3, 5, 6.3, 7.5, 10, 13, 20, 27.5, 35, 47, 70, 85, 115.

PLATE VOLTAGES: 90, 130, 220 volts d-c; 22, 44, 160 volts a-c.

GRID BIAS: 0-5V, 0-20 volts d-c.

SIGNAL VOLTAGES: 5.2, 2.6, 1.3, 0.65 volts peak to peak.

Gm Ranges up to 30,000 micromhos.

POWER REQUIREMENTS: 100 to 125 volts, 60 cycles single phase a-c, 30 watts.

CASE: Gray hammertone finished steel.

FEATURES

Gm Measurements made more accurately by using filtered d-c plate, screen grid and control grid potentials.

Meter Measurement of High Leakage Resistance provides accurate meter measurement of leakage resistance as high as 5 megohms between tube elements, thus being particularly useful for TV servicing and TV line production assembly.

Multiple Switching Facilities assure protection against obsolescence through the use of nine single circuit, twelve position, selector switches.

Twin Section Tubes. Three toggle switches make it possible to rapidly check and compare the respective sections of twin section tubes at only one setting of the selector switches.

Roll Index Chart provides comprehensive, up-to-date test data on commonly encountered tubes as well as those infrequently used.

Model 980 Analyzer

Accurate within 2% d-c; 3% a-c
Size 6¼" x 7½" x 3¼" Scale Length 4.63"
Approx Wt. 2 lbs., 11 ozs.

A highly sensitive, accurate and rugged volt-ohm-milliammeter with a combination of functional ranges which provide a wide range of test measurement applications in the electronic field. D-c sensitivity 20,000 ohms/volt; a-c sensitivity 1000 ohms/volt.

RANGES

D-C Volts	1.6	8	40	160	400	1600 at 20,000 Ohms/Volt
A-C Volts	1.6	8	40	160	400	1600 at 1,000 Ohms/Volt
D-B Range						−15 db to +54 db (in six ranges)
D-C Milliamperes	8	80	800			
D-C Microamperes	80					
D-C Amperes	8					

Ohms Range	Center Scale	Full Scale
R x 1	25	1,000
R x 10	250	10,000
R x 100	2,500	100,000
R x 1,000	25,000	1 megohm
R x 10,000	250,000	10 megohms

CASE: Black molded bakelite.

PANEL: Black molded bakelite with engraved white markings.

MODEL 980

st Equipment

WESTON

urate instruments carefully designed
ountered in general industrial appli-
icing. The 980 Group listed offers
method of visual alignment.

Model 982
Vacuum Tube Voltmeter

Size 10" x 7⅜" x 3 1/16" Scale Length 4.63"
Approx. Wt. 6 lbs. (incl. batteries and accessories)

Self-contained, battery operated. Adaptable to the Radio-TV servicing industry where requirements of peak to peak measurements of a-c voltages exclude the use of conventional meters. Makes possible quantitative measurement of all complex wave form voltages utilized in video, sync and deflection circuits with no a-c line interference in critical measurements. Extremely useful in high impedance and high frequency circuitry measurements. Peak to peak measurement with 10 megohms impedance shunted only by a capacitance of 15 mmf prevents circuit loading.

Accuracy ± 3% d-c, ± 5% a-c rms, sinusoidal wave form. Impedance 10 megohms d-c; 2.8 megs a-c rms; 1 meg a-c, peak to peak.

RANGES

D-C Volts	1.6	8	40	160	400	800	1600
A-C Volts	1.6	8	40	160	400	800	1200
Peak to Peak Volts	1.6	8	40	160	400	800	1600
Low-C Peak to Peak Volts	16	80	400	1600			
Ohms	X1 meg	X100K	X10K	X1K	X100	X10	X1 (10 Ohm Center)

CASE: Gray hammertone finished steel.
PANEL: Aluminum finish, etched black markings.

Model 983 Oscilloscope

Size 10" x 14" x 19.5" Approx. Wt. 40 lbs.

A high gain, wide band oscilloscope designed to accurately reproduce wave-forms comprising a wide band of frequencies. High sensitivity of 15 mv per inch RMS makes it ideal for setting resonant traps, signal tracing in low level stages, as a general null indicator, for phase characteristic measurement in Industrial Applications and for sweep frequency visual alignment of TV receivers. Has provisions for internal calibration, internal phased sine wave (adjustable through 170°) and Z-axis intensity modulation. Reversal of polarity of both horizontal and vertical signals accomplished by means of toggle switching. Identical vertical and horizontal amplifiers, direct coupling used throughout.

WIDE BAND FREQUENCY RESPONSE: Flat within 1.5db from 0-3.6 mc and within —3db to 4.5 mc on both vertical and horizontal amplifiers. Transient response: negligible overshoot. Rise time: 0.15 microsecond.

PHASE SHIFT: Between horizontal-vertical amplifiers, 0-500 kc—0°, to 1 mc within 2°; by internal adjustment with gain controls at max 0° phase shift possible on any specific frequency to 6 mc.

CALIBRATING VOLTAGES: 500 millivolts, 5 volts, 50 volts, 500 volts, peak to peak. Readily available and adjustable by front panel controls.

SWEEP FREQUENCIES: 10-500,000 cps, variable. Preset TV/V Position—30 cps. Preset TV/H Position—7875 cps. Retrace Time—better than 2% to 100 kc; at 500 kc less than 10%.

INPUT IMPEDANCE: Vertical Amplifier (without Shielded Cable), 1 meg shunted by 60 μμf. Vertical Amplifier (with Shielded Cable), 1 meg shunted by 120 μμf. Vertical Amplifier (with Low Capacitance Probe), 2 meg shunted by 15 μμf. Horizontal Amplifier (without Shielded Cable), 1 meg shunted by 60 μμf.

CASE: Gray hammertone finished steel.
PANEL: Aluminum finish, etched black markings.

(continued) →

MODEL 982

MODEL 983

MODEL 985

Model 984 Sweep Generator

Size 13½" x 10" x 6¾" Approx. Wt. 14¼ lbs.

Precision built for efficient trouble shooting and lab practice in problems of sound and video IF circuits, associated trap circuits, TV tuners, video amplifiers and all-purpose visual alignment.

RF OUTPUT: Frequency modulated signal, TV channels 2 to 13 inclusive, complete FM coverage available by means of two preset selector positions.

IF/VIDEO OUTPUT: Frequency modulated signals ranging to 50 megacycles, continuous tuning, signals free from harmonics.

SWEEP WIDTH: Full 10 mc on all channels.

OUTPUT VOLTAGE (RMS): 0.1 volt, sweep is linear.

HORIZONTAL SWEEP FOR OSCILLOSCOPE: Phase adjustment range: 165°. Frequency: Power Line 50-60 cycles per second.

CABLE TERMINATION: RF output 300 ohms balanced. IF output 100 ohms.

CASE: Gray hammertone finished steel.

PANEL: Etched aluminum satin finish.

Model 985 Calibrator

Size 13½" x 10" x 6¾" Scale Length 8¼ ft.
Approx. Weight 18 lbs., 12 ozs.

A time saving instrument for TV shop, engineering, laboratory and industrial alignment applications. Negative and positive Z-axis markers are provided for wave form pattern analysis. Used for making linearity adjustments, calibrating signal generators, and determining signals of unknown frequencies. Generated markers are visible even at trap frequencies. Simultaneous multiple marker insertion, no distortion of response curve, fewer connections to TV receiver.

FREQUENCY RANGE (with Variable Frequency Oscillator): 4-110 megacycles in 7 bands. 170-260 megacycles in 3 bands. Use of second harmonic is suitable for UHF—340-520 megacycles in 3 bands.

OUTPUT ATTENUATOR RANGE: 100% of 1%.

CRYSTAL MARKER ACCURACY: 1.5 mc position ±0.01%; 4.5 mc position ±0.01%.

INTERNAL MODULATION FREQUENCIES: 400 cps, 300 KC, 4.5 mc.

HETERODYNE INPUT SENSITIVITY: 500 microvolts.

LINEARITY ADJUSTMENT: Horizontal—400 cycles, Vertical—300 KC.

DUAL MARKERS: Video and sound . . . available for either Z-axis intensity modulation of scope or conventional marker pip display.

CASE: Gray hammertone finished steel.

PANEL: Aluminum finish, etched black markings.

← See illustration

MODEL 984

MODEL 564 TYPE 3 C

Pocket Size Instrument

Accurate within 2% Scale Length 2.36"
Size 4 33/64" x 3 45/64" x 2 9/16" Approx. Wt. 1¾ lbs.

This volt-ohmmeter has a broad selection of resistance and d-c voltage ranges available from pin jacks molded in the bakelite panel. A toggle switch is used to connect the meter in circuit. All voltage ranges have a sensitivity of 1,000 ohms per volt. A self-contained battery provides the necessary potential for the ohm ranges.

RANGES

	Ohms	
D-C Volts	Full Scale	Center Scale
600	1,000,000	35,000
300	100,000	3,500
30	10,000	350
3	1,000	35

Weston Panel Instruments

Noted for sustained accuracy and long term reliability. Supplied in a wide selection of ranges for all industrial, electronic, TV and radio requirements. Models 301 and 476 are available in 3½" or 3⅜" round flush bakelite cases, and 3¼" metal cases. Also in round surface metal, round surface bakelite and rectangular flush bakelite cases. Models 962 and 964 are supplied in 4½" rectangular semi-flush bakelite cases.

Models 1301 and 1302 are supplied in 3½" round or rectangular flush Bakelite cases. These self-shielded instruments can be mounted interchangeably on magnetic or non-magnetic panels and are supplied with solder type terminals.

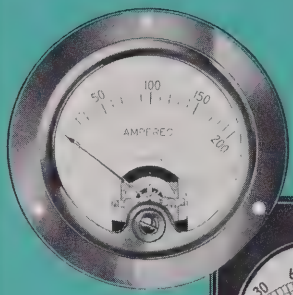

MODEL 301

MODEL 476

Model 301 D-C Instruments

Accurate within 2% Scale Length 2.36"
Permanent Magnet Moving Coil Type

D-C VOLTMETERS

Approximate resistance in ohms per volt: 1 to 40 volts, 62; 50 to 150 volts, 200; 200 volts, 250.

Range	Scale Div.	Range	Scale Div.	Range	Scale Div.	Range	Scale Div.
1.5	75	8	40	30	60	100	50
3	60	10	50	50	50	150	75
5	50	15	75	80	40	200	40

*With Resistance of 1,000 Ohms Per Volt.

Range	Scale Div.	Range	Scale Div.	Range	Scale Div.	Range	Scale Div.
1.5	75	10	50	80	40	300	60
3	60	15	75	100	50	†500	50
5	50	30	60	150	75	†800	40
8	40	50	50	200	40		

* JAN-I-6 and/or MIL-M-6A specifications require 1000 ohms per volt sensitivity.
† Type WF instruments (flush type only) are equipped with a sub-base containing hermetically sealed, wire wound resistors as protection against excessive humidity.

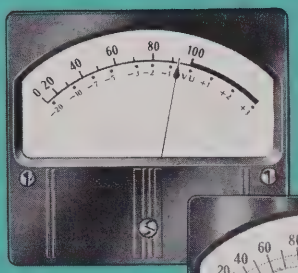

MODEL 962

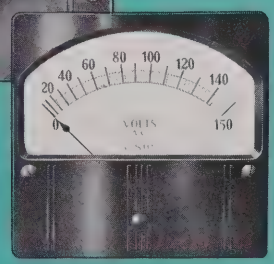

MODEL 964

D-C AMMETERS

Supplied in self-contained ranges up to 50 amperes inclusive, and have a drop of 50 MV ± 5%. Ranges above 50 amperes require external shunts.

Single Ranges: 1/1.5/2/3/5/10/15/30/50.

D-C ZERO CENTER AMMETERS

Range	Scale Div.	Range	Scale Div.
5-0-5	50	20-0-20	40
10-0-10	40	30-0-30	60
15-0-15	60	50-0-50	50

Regularly supplied with self-contained shunts up to and including 50 amperes, but can be supplied with external 50 mv shunts and 5 ft. (0.065 ohm) leads.

(continued next page) ——→

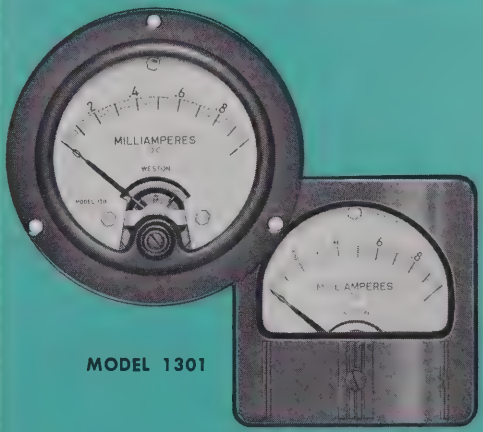

MODEL 1301

Weston Panel Instruments

D-C MILLIAMMETERS

Range	Scale Div.	Approx. Res. Ohms	Range	Scale Div.	Approx. Res. Ohms
1	50	105	30	60	1.2
1.5	75	27	50	50	2.0
2	40	27	100	50	1.0
3	60	18	150	75	0.66
5	50	5.7	200	40	0.5
10	50	2.0	300	60	0.33
15	75	2.0	500	50	0.2
20	40	2.0			

Milliammeters with ranges above 40 MA are shunted, and have a drop of approximately 100 MV.

D-C MICROAMMETERS

Range	Scale Div.	Approx. Res. Ohms
100	50	600
*200	40	55
†500	50	195

*Recommended for use in horizontal or 45° position.
†Recommended for use with Weston Photoelectric Cell.

RECTIFIER TYPE A-C VOLTMETERS

The only practical means of measuring minute a-c currents. They can be relied upon to within 5% of full scale value on wave forms closely approximating the sine wave at ordinary room temperatures.

Range	Scale Div.	Range	Scale Div.
1	50	25	50
1.5	75	50	50
3	60	100	50
5	50	150	75
10	50	300	60
15	75		

Supplied in most ranges with a sensitivity of 1000 or 2000 ohms per volt.

RECT. TYPE A-C MILLIAMMETERS

Range	Scale Div.	Approx. Res. Ohms
0.5	50	1030
1	50	470
2	40	270
5	50	150

RECT. TYPE A-C MICROAMMETERS

Range	Scale Div.	Approx. Res. Ohms
500	50	1030

VU METERS

Available with a choice of two scales. Type A stresses the level in VU and is used largely in monitoring wire lines. Type B emphasizes per cent use of transmitter output and is the standard for broadcast service.

Model 476 A-C Instruments

Accurate within 2% Scale Length 2.03"
Movable Iron Type

Power Consumption: 150 volt range at 115 volts; 0.84 watt. At 60 cycles, 0.84 volt-ampere.

Normally adjusted for use on frequencies of 25 to 125 cycles; they can be adjusted for use on 400, 800 or 1600 cycles or any specified frequency up to 2500 cycles for a nominal surcharge.

A-C VOLTMETERS

Range	Scale Div.	Approx. Ohms Per Volt	Range	Scale Div.	Approx. Ohms Per Volt
1.5	30	3	50	50	52
3	30	6	100	50	110
5	50	10	130	26	110
8	40	10	150	30	110
10	50	14	250	25	167
15	30	14	300	30	167
30	30	26	500	50	167

Higher ranges require external resistors or potential transformers.

A-C AMMETERS

Power Consumption: 5 ampere range at 5 amperes, 0.25 watt. At 60 cycles, 0.26 volt-ampere.

Range	Approx. Res.	Scale Div.
1	0.22	50
1.5	0.092	30
2	0.052	40
3	0.024	30
5	0.010	50
10	0.0037	50
15	0.0027	30
30	0.00085	30
50	0.00072	50

For higher ranges, 5 ampere instruments should be used with Model 604 Current Transformer.

A-C MILLIAMMETERS

For use on frequencies from 25 to 500 cycles.

Range	Approx. Res.	Scale Div.
15	2300	30
25	650	25
50	171	50
100	34	50
250	4.61	25
500	1.14	50

Model 962
A-C Rectifier Type Instruments

Accurate within 5% of full scale value on wave forms closely approximating sine wave at ordinary room temperature.

RECTIFIER TYPE A-C VOLTMETERS

Range	Scale Div.	Range	Scale Div.
1	50	15	75
1.5	75	50	50
3	60	100	50
5	50	150	75
10	50	300	60

Can be supplied in most ranges with a sensitivity of 1000 or 2000 ohms per volt.

RECT. TYPE A-C MILLIAMMETERS

Range	Scale Div.	Approx. Res. Ohms
1	50	500
2	40	360
5	50	240

RECT. TYPE A-C MICROAMMETERS

Range	Scale Div.	Approx. Res. Ohms
100	50	2700
200	40	2100
500	50	900

TYPE 30 VU METERS

This is the most practical form of VU meter because of its size and balanced design. Available with a choice of two scales. Type A scale stresses the level in VU and is largely used in monitoring wire lines. Type B scale emphasizes per cent use of transmitter output and is the standard for broadcast service.

Model 964 A-C Instruments

Accurate within 2 % Scale Length 3.17″
Movable Iron Type

A-C VOLTMETERS

Power Consumption: 150 volt range at 115 volts, 60 cycles — 0.80 watt, 0.80 volt-ampere.

Range	Approx. Ohms Per Volt	Scale Div.	Range	Approx. Ohms Per Volt	Scale Div.
1.5	2.9	75	50	52	50
3	6.3	60	100	110	50
5	6.3	50	130	110	65
8	10	40	150	110	75
10	14	50	250	167	50
15	14	75	300	167	60
30	26	60	500	167	50

Higher ranges require use of external resistors or potential transformers.

A-C AMMETERS

Power Consumption: 5 ampere range at 5 amperes, 60 cycles — 0.25 watt, 0.26 volt-ampere.

Range	Approx. Res.	Scale Div.	Range	Approx. Res.	Scale Div.
1	0.22	50	10	0.0037	50
1.5	0.092	75	15	0.0027	75
2	0.052	40	20	0.0012	40
3	0.024	60	30	0.00085	60
5	0.010	50	50	0.00072	50
8	0.00042	40			

For higher ranges, 5 ampere instruments should be used with Model 604 Current Transformer.

A-C MILLIAMMETERS

Range	Approx. Res.	Scale Div.
15	2300	75
25	650	50
50	171	50
100	34	50
250	4.61	50
500	1.14	50

Model 1301 D-C Instrument

Accurate within 2 % Scale Length 2.36
Core Magnet Moving Coil

D-C VOLTMETERS

Range	Scale Div.	Range	Scale Div.	Range	Scale Div.
1.5	75	15	75	150	75
3	60	30	60	200	40
5	50	50	50	300	60
10	50	100	50		

Sensitivity is approximately 1000 ohms per volt.

D-C AMMETERS

Range (Self-contained)	Scale Div.	Range (Self-contained)	Scale Div.	Range (Self-contained)	Scale Div.
1	50	5	50	30	60
2	40	10	50	50	50
3	60	15	75		

Ranges above 50 amperes require external shunts.

D-C MILLIAMMETERS

Range	Scale Div.	Approx. Res.	Range	Scale Div.	Approx. Res.
1	50	88	30	60	1.0
3	60	18	50	50	2.0
5	50	8	100	50	1
10	50	1.1	200	40	0.5
15	75	1.1	300	60	0.33
20	40	1.1	500	50	0.2

D-C MICROAMMETERS

Range	Scale Div.	Approx. Res.	Range	Scale Div.	Approx. Res.
100	50	1700	500	50	230
200	40	600			

Model 1302 A-C Rectifier Type Instruments

Accurate within 3% of full scale on wave forms closely approximating sine wave at ordinary room temperature.

RECTIFIER TYPE A-C VOLTMETERS

Range	Scale Div.	Range	Scale Div.
1.5	75	10	50
3	60	15	75
5	50		

Can be supplied in most ranges with a sensitivity of 1000 or 2000 ohms per volt.

RECT. TYPE A-C MILLIAMMETERS

Range	Scale Div.	Approx. Res.
1	50	470
5	50	150

RECT. TYPE A-C MICROAMMETERS

Range	Scale Div.	Approx. Res.
200	40	2400
500	50	750

Weston Industrial Multi-Purpose Instruments

Industrial Circuit Tester

Model 785 Type 6

Ultra-Sensitive 28 Ranges **Scale Length 3.17″**
Size 13″ x 12½″ x 5½″ **Approx. Wt. 13½ lbs.**

A deluxe multi-range, multi-purpose analyzer used widely for complete laboratory and industrial checking of electronic and electrical circuits. Current and potential leads connected to the instrument at the same time permit instantaneous current and voltage readings.

D-c sensitivity 20,000 ohms per volt. Accurate within 2% on all d-c ranges except 1000 volts, 3%. On all a-c ranges at 60 cycles accuracy is within 3%. From 25 through 800 cycles on all a-c ranges accuracy is within 5%.

RANGES

Voltage		Current		Resistance	
D-C	A-C	D-C	A-C	Full Scale	Center Scale
1,000	750	10 amps	10 amps	30 megohms	250,000 ohms
500	300	1 amp	5 amps	3 megohms	25,000 ohms
200	150	100 ma	1 amp	300,000 ohms	2,500 ohms
50	30	10 ma	.5 amp	30,000 ohms	250 ohms
10	15	1 ma	—	3,000 ohms	25 ohms
1	5	50 ua	—	—	—

100 millivolts direct or for use with external shunts.

A-C Industrial Analyzer

Model 639 Type 2

Size 18⅞″ x 10⅞″ x 6⅞″ **Scale Length 3.5″**
Approx. Weight 32 lbs.

Complete self-contained power analyzer for industrial maintenance men, utility service engineers, electrical contractors and those engaged in general industrial testing or installation work. Measures a-c current, voltage and power in single and polyphase circuits, as well as power factor in 3 phase, 3 wire, balanced circuits. Uses four 4″ x 4½″ Model 610 instruments. Voltmeter, ammeter and power factor meter accurate within 1%; wattmeter within 2%.

RANGES

Potential ranges 150/300/600 volts. Current ranges 5/25/125 amperes and corresponding wattmeter ranges. Power factor indications are for 3 phase, 3 wire, balanced system only, .30 lag through unity to .80 lead.

On 220 volt 3 phase circuits, the 5 ampere range will take care of loads to 1 hp on the 2 KW scale . . . on the 25 ampere range, up to 7½ hp on the 10 KW scale . . . on the 125 ampere range, up to 40 hp on the 50 KW scale. At 440 or 550 volts the hp and KW ranges are doubled.

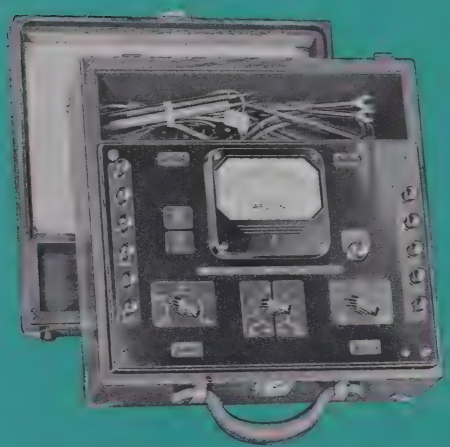

MODEL 785 TYPE 6

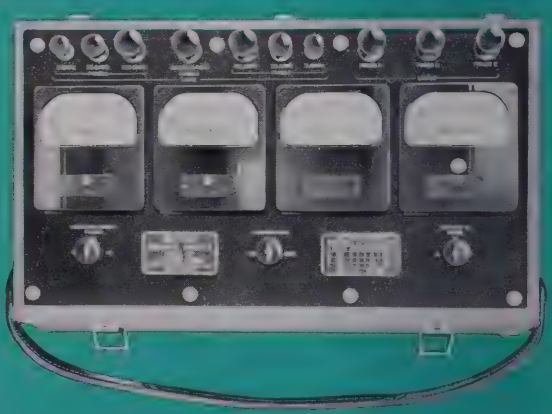

MODEL 639 TYPE 2

Weston A-C Clamp Volt-Ammeter

Accurate within 3 % Scale Length 2.36"
Size 13 5/8" x 4 3/8" x 2 1/2" Approx. Wt. 3 3/4 lbs.

The ideal maintenance tool for on-the-job testing. Rapidly measures a-c voltage and current without breaking the circuit. Combines in one instrument three a-c voltage ranges and five a-c current ranges, completely covering voltages and currents most frequently encountered in industrial and utility service work.

Clamp Ammeter is similar to the Clamp Volt-Ammeter except that it is not provided with the voltage features or regularly equipped with an adjustable pointer stop.

OUTSTANDING FEATURES

1. Dependable Magnetic Circuit.
2. Rugged Bakelite Case.
3. Non-Shatterable Glass.
4. Easily Read, Double Scale.
5. Pear-shaped Pointer for Maximum Visibility.
6. Adjustable Pointer Stop for Measuring Motor-Starting Currents.
7. Successive Voltage and Current Readings at the Flick of a Switch.
8. Positive, Convenient 6-Position Range and Selector Switch.
9. Safety Type Trigger—Designed for Glove or Bare Hand Use.
10. Slot for Carrying Strap.
11. Solid Bakelite Handle—Man-Size Grip.
12. 5 A-C Current Ranges—(1000/250/100/25/10 amperes full scale).
13. Flexible Potential Leads Supplied.
14. 3 A-C Voltage Ranges—(700/350/175 volts full scale).
15. Fast, well damped movement.
16. Complete Instrument Insulated for 750 Volt Service.
17. Clamping Jaw Insulation—Long Service, Replaceable Rubber.
18. Can be Hung on a Conductor, Leaving Operator's Hands Free.
19. Conductors up to 2" in Diameter.

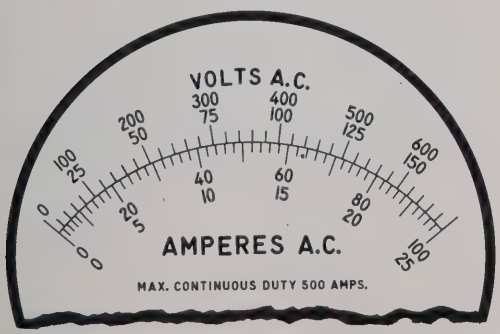

← Actual Size Scale

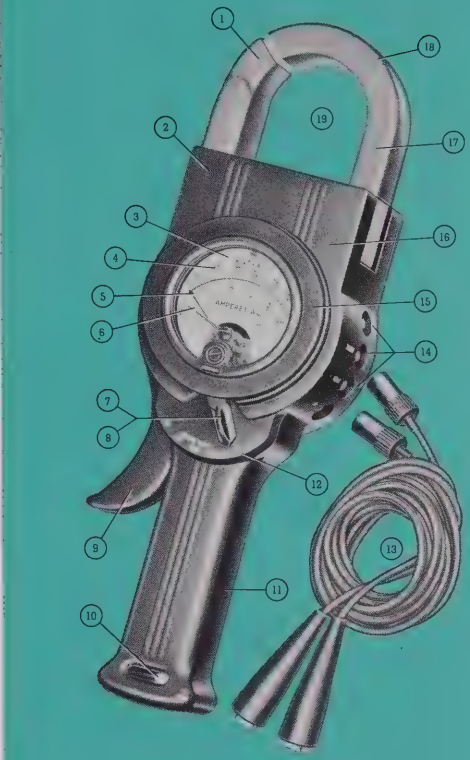

MODEL 633 CLAMP VOLT-AMMETER TYPE VA-1

RANGES

Model 633 Type VA-1 (Incl. Potential Leads)
1000/250/100/25/10 amperes a-c
700/350/175 volts a-c

Model 633 Type A-1—500/250/100/50/25/10 amperes a-c

Model 633 Type A-2—1000/500/250/100/25/10 amperes a-c

Model 633 Type A-3—2000/1000/500/250/100/50 amperes a-c

Model 9958, 50 Foot Extension Cable, Plug and Receptacle for Model 633 Types VA-1, A-1, A-2, A-3

Leather Carrying Case (Model 633 Types VA-1, A-1, A-2, A-3)

Leather Carrying Case (Model 9958—Cable, Plug and Receptacle)

Weston A-C Pocket Size Clamp Volt-Ammeter

MODEL 749
CLAMP VOLT-AMMETER

MODEL 9886
PLUG-IN ADAPTER

Accurate within 3% **Scale Length 2.36″**
Size 7½″ x 3″ x 1¼″ **Approx. Wt. 14 oz.**

An easy to handle, lightweight clamp volt-ammeter designed particularly for the electrician, service man, engineer and motor repair shop. Contains six current ranges and three voltage ranges quickly readable from any angle on one large size scale. Supplied complete with carrying case, voltage test leads with insulated battery clips and three accessory probes.

ADVANTAGES OF MODEL 749

- Light Weight, Compact, Hand-Fitting Design
- Easily Slipped into Pocket
- Precision Ground Faces Provide Positive Jaw Contact
- Accommodates Conductors up to 1″ Round or 1¾″ x ⅜″ Rectangular
- Large, Smooth Action Trigger
- Satin Finish Black Bakelite Case
- Positive Action Range Selector Switch
- Shatterproof Wrap-around Plastic Window
- Only One Scale for all Ranges
- Bright Red Pointer for Easy Reading
- Uses New Shock-Mounted Core Magnet Mechanism
- Fully Insulated for 750 Volt Service
- Sturdy Carrying Case with Convenient Lead Compartment

RANGES

300/150/60/30/15/6 amperes a-c; 600/300/150 volts a-c

PLUG-IN ADAPTER

Designed for use with the Pocket Size Clamp Volt-Ammeter, it provides a single or 10 loop conductor, around which the clamping jaws can be placed to provide current measurements. A safe means of taking voltage measurements is also provided. It is rated at 250 volts a-c and can be used to measure current up to 25 amperes for "Direct Reading" connection and up to 10 amperes for the "Amperes Divided by 10" connection.

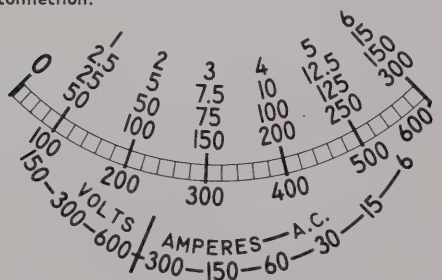

Actual Size Scale

CLAMP VOLT-AMMETER, DIVIDED CARRYING CASE, VOLTAGE TEST LEADS AND THREE PROBES

You Might Want To Know...

COPPER DATA

Resistivity and Density

(Based on National Bureau of Standards)

The international annealed-copper standard of 100% conductivity (NBS Circular No. 31), based on the International Ohm, is as follows at 20 C:

Resistance of a uniform, annealed copper wire one square millimeter in cross section and one meter long = 1/58 ohm = 0.017241 ohm. Density = 8.89 grams per cubic centimeter. These values also can be expressed as:

0.017241 ohm (meter, mm^2)
10.371 ohms per foot for one circular mil cross section
1.7241 microhm per centimeter cube
0.67879 microhm per inch cube
0.15328 ohm per meter-for weight of one gram
875.2 ohms per mile for weight of one pound.

Temperature Coefficient of Resistance

The temperature coefficient of resistance at constant mass and free expansion of standard annealed copper of 100% conductivity is, per degree centigrade, 0.00393 at 20 C or 0.00385 at 25 C.

Resistance values of copper wire of 100% conductivity given in tables at 25 C may be corrected for any temperature by means of the following equation:

$R_t = R_{25}\,[1 + 0.00385\,(t - 25)]$

Where R_t = resistance in ohms at temperature t
R_{25} = resistance in ohms at 25 C
t = temperature of wire in degrees C

ALLOWABLE CURRENT-CARRYING CAPACITIES OF INSULATED COPPER CONDUCTORS

Not More Than Three Conductors in Raceway or Cable*

(Condensed from National Electrical Code)

Amperes

Size Awg or MCM	60 C — Types of Insulation: R, RW, RU; RUW 14-2; T, TW	75 C — Types of Insulation: RH	85 C — Types of Insulation: Paper; V; 90 C; TA; AVB	110 C — Types of Insulation: AVA AVL	125 C — Types of Insulation: A1 14-8 AIA	200 C — Types of Insulation: A 14-8 AA
14	15	15	25	30	30	30
12	20	20	30	35	40	40
10	30	30	40	45	50	55
8	40	45	50	60	65	70
6	55	65	70	80	85	95
4	70	85	90	105	115	120
3	80	100	105	120	130	145
2	95	115	120	135	145	165
1	110	130	140	160	170	190
0	125	150	155	190	200	225
00	145	175	185	215	230	250
000	165	200	210	245	265	285
0000	195	230	235	275	310	340
250	215	255	270	315	335	...
300	240	285	300	345	380	...
350	260	310	325	390	420	...
400	280	335	360	420	450	...
500	320	380	405	470	500	...
600	355	420	455	525	545	...
700	385	460	490	560	600	...
750	400	475	500	580	620	...
800	410	490	515	600	640	...
900	435	520	555	...	...	...
1000	455	545	585	680	730	...

Correction Factors for Room Temperatures Over 30C

C	F						
40	104	0.82	0.88	0.90	0.94	0.95	...
45	113	0.71	0.82	0.85	0.90	0.92	...
50	122	0.58	0.75	0.80	0.87	0.89	...

* This table is based on room temperature of 30 C or 86F. For correction factors above 50 C, for single conductors in free air, for more than three conductors, and for other pertinent factors and data, see NE Code.

DIAMETER, WEIGHT, AND RESISTANCE* OF STANDARD ANNEALED COPPER CONDUCTOR

Round, Solid, Bare Wire

**At 25C(77F)—Based on National Bureau of Standards and on International Ohm.*

Size, Awg	Area, Cir Mils	Diam, Mils†	Lb per 1000 Ft	Ohms per 1000 Ft	Ft per Ohm
0000	211,600	460.0	640.5	0.04998	20,010
000	167,800	409.6	507.9	0.06302	15,870
00	133,100	364.8	402.8	0.07947	12,580
0	105,500	324.9	319.5	0.1002	9980
1	83,690	289.3	253.3	0.1264	7914
2	66,370	257.6	200.9	0.1593	6276
3	52,640	229.4	159.3	0.2009	4977
4	41,740	204.3	126.4	0.2533	3947
5	33,100	181.9	100.2	0.3195	3130
6	26,250	162.0	79.46	0.4028	2482
7	20,820	144.3	63.02	0.5080	1969
8	16,510	128.5	49.98	0.6405	1561
9	13,090	114.4	39.63	0.8077	1238
10	10,380	101.9	31.43	1.018	981.8
11	8234	90.74	24.92	1.284	778.7
12	6530	80.81	19.77	1.619	617.5
13	5178	71.96	15.68	2.042	489.7
14	4107	64.08	12.43	2.575	388.3
15	3257	57.07	9.858	3.247	308.0
16	2583	50.82	7.818	4.094	244.2
17	2048	45.26	6.200	5.163	193.7
18	1624	40.30	4.917	6.510	153.6
19	1288	35.89	3.899	8.210	121.8
20	1022	31.96	3.092	10.35	96.6
21	810.1	28.46	2.452	13.05	76.61
22	642.4	25.35	1.945	16.46	60.75
23	509.5	22.57	1.542	20.76	48.18
24	404.0	20.10	1.223	26.17	38.21
25	320.4	17.90	0.9699	33.00	30.30
26	254.1	15.94	0.7692	41.62	24.03
27	201.5	14.20	0.6100	52.48	19.06
28	159.8	12.64	0.4837	66.17	15.11
29	126.7	11.26	0.3836	83.44	11.98
30	100.5	10.03	0.3042	105.2	9.504
31	79.70	8.928	0.2413	132.7	7.537
32	63.21	7.950	0.1913	167.3	5.977
33	50.13	7.080	0.1517	211.0	4.740
34	39.75	6.305	0.1203	266.0	3.759
35	31.52	5.615	0.09542	335.5	2.981
36	25.00	5.000	0.07568	423.0	2.364
37	19.83	4.453	0.06001	533.4	1.875
38	15.72	3.965	0.04759	672.6	1.487
39	12.47	3.531	0.03774	848.1	1.179
40	9.89	3.145	0.02993	1069	0.9350
41	7.84	2.800	0.02374	1349	0.7415
42	6.22	2.494	0.01883	1701	0.5880
43	4.93	2.221	0.01493	2144	0.4663
44	3.91	1.978	0.01184	2704	0.3698

†Stranding adds approx. 15% to diameter of solid wire.

Stranded, Bare Cable—Concentric Lay

Size, MCM	Diam, Mils	No. of Wires	Lb per 1000 Ft	Ohms per 1000 Ft	Ft per Ohm
2000	1631	127	6180	0.00539	185,500
1750	1526	127	5400	0.00616	162,300
1500	1412	91	4630	0.00719	139,100
1250	1289	91	3860	0.00863	115,900
1000	1152	61	3090	0.0108	92,590
750	998	61	2320	0.0144	69,440
500	814	37	1540	0.0216	46,300
400	728	37	1240	0.0270	37,040
300	630	37	926	0.0360	27,770
250	575	37	772	0.0431	23,200

CONDUCTORS IN CONDUIT OR TUBING

One to Nine Insulated Conductors*
Rubber-covered: Types RF-32, RUF, R, RH, RW, RU, RUW.
Thermoplastic: Types TF, T, and TW.

(From National Electrical Code)

Size of Conduit or Tubing, Inches

Size, Awg or MCM	Number of Conductors in One Conduit or Tubing								
	1	2	3	4	5	6	7	8	9
18	½	½	½	½	½	½	½	¾	¾
16	½	½	½	½	½	½	¾	¾	¾
14	½	½	½	½	¾	¾	1	1	1
12	½	½	½	¾	¾	1	1	1	1¼
10	½	¾	¾	¾	1	1	1	1¼	1¼
8	½	¾	¾	1	1¼	1¼	1¼	1½	1½
6	½	1	1	1¼	1½	1½	2	2	2
4	½	1¼	†1¼	1½	1½	2	2	2	2½
3	¾	1¼	1¼	1½	2	2	2	2½	2½
2	¾	1¼	1¼	2	2	2	2½	2½	2½
1	¾	1½	1½	2	2½	2½	2½	3	3
0	1	1½	2	2	2½	2½	3	3	3
00	1	2	2	2½	2½	3	3	3	3½
000	1	2	2	2½	3	3	3	3½	3½
0000	1¼	2	2½	3	3	3	3½	3½	4
250	1¼	2½	2½	3	3	3½	4	4	4½
300	1¼	2½	2½	3	3½	4	4	4½	4½
350	1¼	3	3	3½	3½	4	4½	4½	5
400	1½	3	3	3½	4	4	4½	5	5
500	1½	3	3	3½	4	4½	5	5	6
600	2	3½	3½	4	4½	5	6	6	6
700	2	3½	3½	4½	5	5	6	6	...
750	2	3½	3½	4½	5	6	6	6	...
800	2	3½	4	4½	5	6	6	...	...
900	2	4	4	5	6	6	6	...	...
1000	2	4	4	5	6	6	...	...	...
1250	2½	4½	4½	6	6	...	...	...	...
1500	3	5	5	6	...	...	...	...	...
1750	3	5	6	6	...	...	...	...	...
2000	3	6	6	...	...	...	...	...	...

* For more than nine conductors, see NE Code.

† Where a service run of conduit or electrical metallic tubing does not exceed 50 feet in length and does not contain more than the equivalent of two quarter bends from end to end, two No. 4 insulated and one No. 4 bare conductors may be installed in 1-inch conduit or tubing.

MELTING POINTS OF 40 ELEMENTS

(Based on National Bureau of Standards)

Element	Melting Point, C	Element	Melting Point, C
Aluminum (Al)	660.1 ± 0.1	Molybdenum (Mo)	2612 ± 50
Antimony (Sb)	630.5 ± 0.1	Nickel (Ni)	1453 ± 1
Beryllium (Be)	1280 ± 40	Niobium (Nb)*	2000 ± 50
Bismuth (Bi)	271.3 ± 0.1	Nitrogen (N)	−210 ± 0.3
Boron (B)	2300 ± 300	Oxygen (O)	−218.8± 0.3
Cadmium (Cd)	320.9 ± 0.1	Platinum (Pt)	1769 ± 1
Carbon, graph (C)	3700 ± 100	Potassium (K)	63 ± 1
Chlorine (Cl)	−101 ± 2	Radium (Ra)	700
Chromium (Cr)	1800 ± 50	Silicon (Si)	1430 ± 20
Cobalt (Co)	1492 ± 20	Silver (Ag)	960.8 ± 0.0
Copper (Cu)	1083.0 ± 0.1	Sodium (Na)	97.7 ± 0.2
Gold (Au)	1063.0 ± 0.0	Sulfur, rhom. (S)	112.8 ± 0.2
Hydrogen (H)	−259.2± 0.1	Tantalum (Ta)	3000 ± 100
Iodine (I)	114 ± 1	Thorium (Th)	1800 ± 150
Iridium (Ir)	2443 ± 3	Tin (Sn)	231.9 ± 0.1
Iron (Fe)	1537 ± 3	Titanium (Ti)	1820 ± 100
Lead (Pb)	327.3 ± 0.1	Uranium (U)	1133 ± 2
Magnesium (Mg)	650 ± 2	Vanadium (V)	1735 ± 50
Manganese (Mn)	1260 ± 20	Wolfram (W)†	3380 ± 20
Mercury (Hg)	-38.87± 0.02	Zinc (Zn)	419.5 ± 0.1

Temperatures below −182.97C are on the Centigrade Thermodynamic Scale. Others are on the Int. Temp. Scale.

*Columbium. †Tungsten.

HEAT AND ENERGY EQUIVALENTS

1 kilowatt-hour equals
- 1.341 horsepower-hours (hp-hr)
- 2,655,217 foot-pounds (ft-lb)
- 3413 British thermal units (Btu)
- 3,600,000 joules
- 860 kilogram-calories (kg-cal)
- 367,098 kilogram-meters (kg-m)
- 0.235 lb carbon oxidized*
- 3.517 lb water evap. from and at 212 F
- 22.75 lb water raised from 62 to 212 F

1 horsepower-hour equals
- 0.7457 kilowatt-hour (kw-hr)
- 1,980,000 foot-pounds
- 2545 British thermal units
- 2,684,520 joules
- 641.3 kilogram-calories
- 273,745 kilogram-meters
- 0.175 lb carbon oxidized*
- 2.623 lb water evap. from and at 212 F
- 16.96 lb water raised from 62 to 212F

1 British thermal unit equals
- 777.97 foot-pounds
- 1054.8 joules or watt-seconds
- 0.000293 kw-hr = 0.293 whr
- 0.000393 hp-hr

1 kilowatt equals
- 1.341 horsepower
- 44.254 foot-pounds per minute
- 56.883 Btu per minute

1 horsepower equals
- 0.7457 kilowatt = 745.7 watts
- 33,000 foot-pounds per minute
- 42.418 Btu per minute
- 1.0139 metric horsepower

1 lb carbon oxidized* equals
- 4.254 kilowatt-hours
- 5.705 horsepower-hours
- 11,296,000 foot-pounds
- 14,520 British thermal units
- 15,316,000 joules
- 0.76 lb fuel or furnace oil oxidized*†
- 1.11 lb anthracite oxidized*†
- 12.9 cu ft natural gas oxidized*†
- 26.4 cu ft manufactured gas oxidized*†
- 14.97 lb water evap. from and at 212 F

1 lb water evaporated from and at 212 F equals
- 0.284 kilowatt-hour
- 0.381 horsepower-hour
- 754,870 foot-pounds
- 970.3 British thermal units
- 1,023,500 joules
- 0.067 lb carbon oxidized*

* Perfect efficiency assumed. † Varies.

DECIMAL AND METRIC EQUIVALENTS OF COMMON FRACTIONS OF AN INCH

U. S. Inch		Mm	U. S. Inch		Mm
Fraction	Decimal		Fraction	Decimal	
1/32	0.03125	0.794	17/32	0.53125	13.494
1/16	0.06250	1.588	9/16	0.56250	14.288
3/32	0.09375	2.381	19/32	0.59375	15.081
1/8	0.12500	3.175	5/8	0.62500	15.875
5/32	0.15625	3.969	21/32	0.65625	16.669
3/16	0.18750	4.763	11/16	0.68750	17.463
7/32	0.21875	5.556	23/32	0.71875	18.256
1/4	0.25000	6.350	3/4	0.75000	19.050
9/32	0.28125	7.144	25/32	0.78125	19.844
5/16	0.31250	7.938	13/16	0.81250	20.638
11/32	0.34375	8.731	27/32	0.84375	21.431
3/8	0.37500	9.525	7/8	0.87500	22.225
13/32	0.40625	10.319	29/32	0.90625	23.019
7/16	0.43750	11.113	15/16	0.93750	23.813
15/32	0.46875	11.906	31/32	0.96875	24.606
1/2	0.50000	12.700	1/1	1.00000	25.400

MEASUREMENTS AND TABLES

LINEAR MEASURE

12 inches (in.)	= 1 foot (ft.)
3 feet	= 1 yard (yd.)
5½ yards, or 16½ feet	= 1 rod (rd.)
320 rods, or 5,280 feet	= 1 mile (mi.)

SQUARE MEASURE

144 sq. inches (sq. in.)	= 1 sq. foot (sq. ft.)
9 sq. feet	= 1 sq. yard (sq. yd.)
30¼ sq. yards	= 1 sq. rod (sq. rd.)
160 sq. rods	= 1 acre (A)
640 acres	= 1 sq. mile (sq. mi.)
1 acre = 4,840 sq. yds.	= 43,560 sq. ft.

CUBIC MEASURE

1,728 cu. inches (cu. in.)	= 1 cu. foot (cu. ft.)
27 cu. feet	= 1 cu. yard (cu. yd.)
128 cu. feet	= 1 cord (cd.)

DRY MEASURE

2 pints (pt.)	= 1 quart (qt.)
8 quarts	= 1 peck (pk.)
4 pecks	= 1 bushel (bu.)

LIQUID MEASURE

2 pints	= 1 quart
4 quarts	= 1 gallon
63 gallons	= 1 hogshead (hhd.)

MARINER'S MEASURE

6 feet	= 1 fathom
120 fathoms	= 1 cable length
7⅓ cable lengths	= 1 mile
5,280 feet	= 1 statute mile
6,080 feet	= 1 nautical mile
3 marine miles	= 1 marine league

ENGLISH MONEY

4 farthings (far.)	= 1 penny (d.)
12 pence	= 1 shilling (s.)
20 shillings	= 1 pound (£)
21 shillings	= 1 guinea (G.)

TROY WEIGHT

24 grains (gr.)	= 1 pennyweight (pwt.)
20 pennyweight	= 1 ounce (oz.)
12 ounces	= 1 pound (lb.)

APOTHECARIES' WEIGHT

20 grains (gr.)	= 1 scruple (℈)
3 scruples	= 1 dram (ʒ)
8 drams	= 1 ounce (ʒ)
12 ounces	= 1 pound (lb.)

CONVERSION FACTORS

Temperatures

Deg C = 5/9 (Deg F − 32). Deg F = 9/5 (Deg C) + 32
Degrees absolute (Kelvin) = Degrees centigrade + 273.16
Degrees absolute (Rankine) = Degrees Fahrenheit + 459.69

Conversion Ratios

Multiply	By	To Obtain
Diam circle	3.1416	Circumference circle
Diam circle	0.8862	Side of equal square
Diam circle squared	0.7854	Area of circle
Circular mils	0.7854	Square mils
Diam sphere squared	3.1416	Area of sphere
Diam sphere cubed	0.5236	Volume of sphere
U. S. Gallons	0.8327	Imperial gallons (British)
U. S. Gallons	0.1337	Cubic feet
U. S. Gallons	8.330	Pounds of water (20 C)
Cubic feet	62.427	Pounds of water (4 C)
Feet of water (4 C)	0.4335	Pounds per sq inch
In. of mercury (0 C)	0.4912	Pounds per sq inch
Seconds squared	16.08	Feet fallen from rest
Knots	1.1516	Miles per hour
To obtain the above	Divide by	Starting with the above

METRIC EQUIVALENTS

(Based on National Bureau of Standards)

LENGTH

Cm	= 0.3937 in.	In.	= 2.5400 cm
Meter	= 3.2808 ft	Ft	= 0.3048 m
Meter	= 1.0936 yd	Yd	= 0.9144 m
Km	= 0.6214 mile	Mile	= 1.6093 km

AREA

Sq cm	= 0.1550 sq in	Sq in.	= 6.4516 sq cm
Sq m	= 10.7639 sq ft	Sq ft	= 0.0929 sq m
Sq m	= 1.1960 sq yd	Sq yd	= 0.8361 sq m
Hectare	= 2.4710 acres	Acre	= 0.4047 hectare
Sq km	= 0.3861 sq mile	Sq mile	= 2.5900 sq km

VOLUME

Cu cm	= 0.0610 cu in.	Cu in.	= 16.3872 cu cm
Cu m	= 35.3145 cu ft	Cu ft	= 0.0283 cu m
Cu m	= 1.3079 cu yd	Cu yd	= 0.7646 cu m

CAPACITY

Liter	= 61.0250 cu in.	Cu in.	= 0.0164 liter
Liter	= 0.0353 cu ft	Cu ft	= 28.3162 liters
Liter	= 0.2642 gal (U.S.)	Gal	= 3.7853 liters
Liter	= 0.0284 bu (U.S.)	Bu	= 35.2383 liters
Liter	= 1000.027 cu cm = 1.0567 qt (liquid) or 0.9081 qt. (dry) = 2.2046 lb of pure water at 4 C = 1 kg		

WEIGHT

Gram	= 15.4324 grains	Grain	= 0.0648 g
Gram	= 0.0353 oz	Oz	= 28.3495 g
Kg	= 2.2046 lb	Lb	= 0.4536 kg
Kg	= 0.0011 ton (sht)	Ton (sht)	= 907.1848 kg
Ton (met.)	= 1.1023 ton (sht)	Ton (sht)	= 0.9072 ton (met.)
Ton (met.)	= 0.9842 ton (lg)	Ton (lg)	= 1.0160 ton (met.)

PRESSURE

1 kg per sq cm	= 14.223 lb per sq in.
1 lb per sq in.	= 0.0703 kg per sq cm
1 kg per sq m	= 0.2048 lb per sq ft
1 lb per sq ft	= 4.8824 kg per sq m
1 kg per sq cm	= 0.9678 normal atmosphere
1 normal atmosphere	= 1.0332 kg per sq cm = 1.0133 bars = 14.696 lb per sq in.

TV STANDARD FREQUENCIES

Horizontal Frequency	15,750 CPS
Vertical Frequency	60 CPS
Lines per Picture	525
Frame Rate per Second	30

Channel	Picture Carrier Freq. (Megacycles)	Sound Carrier Freq. (Megacycles)
2	55.25	59.75
3	61.25	65.75
4	67.25	71.75
5	77.25	81.75
6	83.25	87.75
7	175.25	179.75
8	181.25	185.75
9	187.25	191.75
10	193.25	197.75
11	199.25	203.75
12	205.25	209.75
13	211.25	215.75

MINIATURE PORTABLE A-C
CURRENT TRANSFORMERS
INSTRUMENTS • A-C CLAMP
LINE TEST EQUIPMENT • POC
INSTRUMENTS • MINIATURE
MEASURING INSTRUMENTS
INSTRUMENTS • A-C AND
AND CURRENT TRANSFORM
A-C AND D-C INSTRUMENT
INDUSTRIAL MULTI-PURPOSE
VOLT-AMMETER • MODEL 9
SIZE INSTRUMENT • PANE
ELECTRICAL RECORDERS •
A-C AND D-C PORTABLE TE
D-C PORTABLE TEST INSTRU
MINIATURE PORTABLE A-C
CURRENT TRANSFORMERS
INSTRUMENTS • A-C CLAMP
LINE TEST EQUIPMENT • POC
INSTRUMENTS • MINIATURE
MEASURING INSTRUMENTS
TEST INSTRUMENTS • A-C A
AND CURRENT TRANSFORM
INSTRUMENTS • A-C CLAMP
LINE TEST EQUIPMENT • POC
INSTRUMENTS • MINIATURE
MEASURING INSTRUMENTS
TEST INSTRUMENTS • A-C A
AND D-C INSTRUMENTS A
INDUSTRIAL MULTI-PURPOSE
SIZE INSTRUMENT • PANE
ELECTRICAL RECORDERS •
A-C AND D-C PORTABLE TE
D-C PORTABLE TEST INSTRU
MINIATURE PORTABLE A C
CURRENT TRANSFORMERS
INSTRUMENTS • A-C CLAMP

CIR. A-42-C

PRINTED IN U.S.A.

APR 1 2 1957 PM

TEST EQUIPMENT FOR ELECTRONIC MEASUREMENTS AND INDUSTRIAL MAINTENANCE

Clamp Volt–Ammeters
Industrial Circuit Tester
A-C Industrial Analyzer
Electron Tube Analyzer
Oscilloscope
Tubechecker
Volt–Ohm–Milliammeters
Vacuum Tube Voltmeter
Sweep Generator
Calibrator
Volt-Ohmmeter
Ohmmeter
Insulation Testers
Power Level Meters
Accessories

INDICATE WESTON Instruments SINCE 1888 RECORD CONTROL

CATALOG
R-36-C

HUGHES-PETERS, INC.
300 W. FIFTH ST. AT PERRY
DAYTON, OHIO
PHONES - MICHIGAN 8551 - 8555

WESTON ELECTRICAL INSTRUMENT CORPORATION, NEWARK 5, NEW JERSEY, U.S.A.

A Subsidiary of Daystrom, Incorporated

A-C CLAMP AMMETERS AND VOLT-AMMETER

Accurate within 3% **Scale Length 2.36″**

Size 13⅝″ x 4⅜″ x 2½″ **Approx. Wt. 3¾ lbs.**

The ideal maintenance tool for on-the-job testing. Rapidly measures a-c voltage and current without breaking the circuit. Combines in one instrument three a-c voltage ranges and five a-c current ranges, completely covering voltages and currents most frequently encountered in industrial and utility service work.

Clamp Ammeter is similar to the Clamp Volt-Ammeter except that it is not provided with the voltage features or regularly equipped with an adjustable pointer stop.

FEATURES

- Dependable Magnetic Circuit
- Rugged Bakelite Case
- Non-Shatterable Glass
- Easily Read, Double Scale
- Pear-shaped Pointer for Maximum Visibility
- Adjustable Pointer Stop for Measuring Motor-Starting Currents
- Successive Voltage and Current Readings at the Flick of a Switch
- Positive, Convenient 6-Position Range and Selector Switch
- Safety Type Trigger—Designed for Glove or Bare Hand Use
- Slot for Carrying Strap
- Solid Bakelite Handle—Man-Size Grip
- 5 A-C Current Ranges—(1000/250/100/25/10 amperes full scale)
- Flexible Potential Leads Supplied
- 3 A-C Voltage Ranges—(700/350/175 volts full scale)
- Fast, well damped movement
- Complete Instrument Insulated for 750 Volt Service
- Clamping Jaw Insulation—Long Service, Replaceable Rubber
- Can be Hung on a Conductor, Leaving Operator's Hands Free
- Conductors up to 2″ in Diameter

Model 633—Clamp Volt-Ammeter, Type VA-1

Ranges

Model 633 Type VA-1 (Incl. Potential Leads)
1000/250/100/25/10 amperes a-c
700/350/175 volts a-c

Model 633 Type A-1—500/250/100/50/25/10 amperes a-c

Model 633 Type A-2—1000/500/250/100/25/10 amperes a-c

Model 633 Type A-3—2000/1000/500/250/100/50 amperes a-c

Model 9958, 50 Foot Extension Cable, Plug and Receptacle for Model 633 Types A-1, A-2, A-3

Leather Carrying Case (Model 633 Types VA-1, A-1, A-2, A-3)

Leather Carrying Case (Model 9958—Cable, Plug and Receptacle)

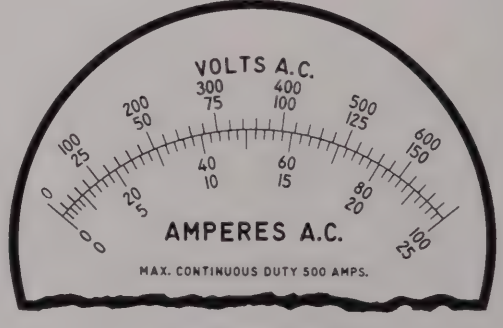

Actual Size Scale
Model 633

PRICE LIST for CATALOG R-36
Weston Test Equipment

Catalog Section 6
PLI-D 856

WESTON

Without Notice
Subject to Change

ALL PRICES ARE LIST, F.O.B. FACTORY, NEWARK 5, NEW JERSEY, U.S.A.

Model 564 Type 3C (Inc. Test Leads)	$ 64.50
Model 633 Type VA-1 (Inc. Potential Leads)	114.50
Model 633 Type A-1	106.50
Model 633 Type A-2	106.50
Model 633 Type A-3	114.50
Model 639 Type 2	763.00
Model 686 Type 10A	975.00
Model 689 Type 1E (Inc. Test Leads)	29.75
Model 689 Type 1F (Inc. Test Leads)	28.25
Model 695 Type 11 and 14	72.00
Model 697 (Inc. Test Leads)	59.50
Model 749 (Inc. Test Leads, Carrying Case, Probes)	49.00
Model 779 Type 1A	153.00
Model 785 Type 6A in Oak Carrying Case	170.25
Model 785 Type 6A in Steel Case for Bench Use	140.25
Model 799 (Inc. leads, tubes, batteries, oak case)	75.00
Model 980	46.75
Model 981 Type 3	239.50
Model 982	76.50
Model 983	395.50
Model 984	199.50
Model 985	199.50

Accessories

Model 604 Type 1 (200:5, 300:5) $18.00 - (400:5, 500:5)	16.50
Model 604 Type 2 (200:5) $30.00 - (400:5, 500:5)	28.50
Model 792	37.50
100 Millivolt External Shunts: 50 amp., $12.75 - 100 amp., $12.75 - 250 amp., $14.00 - 500 amp.	24.00
Model 9958, 50 Foot Extension Cable, Plug and Receptacle for Model 633 Types VA-1, A-1, A-2, A-3	72.00
Model 9886 Plug-In Adapter—D159983	4.75

Carrying Cases

For Model 633 Types VA-1, A-1, A-2, A-3	13.50
For Model 689	11.00
For Models 564, 695 and 697	9.00
For Model 9958—Cable, Plug and Receptacle	22.50
For Model 980	6.75
For Model 982	9.00

Probes

High Voltage for Models 980 and 982	13.50
RF for Model 982	6.95
Low Capacitance Probe for Model 982	3.00
Isolation Probe for Model 982	.75
Low Capacitance for Model 983	13.50
Demodulator for Model 983	13.50
Shielded Input Lead for Model 983	5.95

WESTON ELECTRICAL INSTRUMENT CORPORATION

A Subsidiary of Daystrom, Incorporated

Newark 5, New Jersey, U.S.A.

Printed in U.S.A.

A-C POCKET SIZE CLAMP VOLT-AMMETER

Accurate within ±3% of full scale value when used on 50-60 cycles.

±5% of full scale value when used on 400 cycles.
Scale Length 2.36″

Size 7½″ x 3″ x 1¼″ **Approx. Wt. 14 oz.**

An easy to handle, lightweight clamp volt-ammeter designed particularly for the electrician, service man, engineer and motor repair shop. Contains six current ranges and three voltage ranges quickly readable from any angle on one large size scale. Supplied complete with carrying case, voltage test leads with insulated battery clips and three accessory probes.

FEATURES

- Light Weight, Compact, Hand-Fitting Design
- Easily Slipped into Pocket
- Precision Ground Faces Provide Positive Jaw Contact
- Accommodates Conductors up to 1″ Round or 1¾″ x ⅜″ Rectangular
- Large, Smooth Action Trigger
- Satin Finish Black Bakelite Case
- Positive Action Range Selector Switch
- Shatterproof Wrap-around Plastic Window
- Only One Scale for all Ranges
- Bright Red Pointer for Easy Reading
- Uses New Shock-Mounted Core Magnet Mechanism
- Fully Insulated for 750 Volt Service
- Sturdy Carrying Case with Convenient Lead Compartment

Ranges

300/150/60/30/15/6 amperes a-c; 600/300/150 volts a-c

Plug-In Adapter

Model 9886 Plug-in Adapter is designed for use with the Pocket Size Clamp Volt-Ammeter. It provides a single or 10 loop conductor, around which the clamping jaws can be placed to provide current measurements. A safe means of taking voltage measurements is also provided.

It is rated at 250 volts a-c and can be used to measure current up to 25 amperes for "Direct Reading" connection and up to 10 amperes for the "Amperes Divided by 10" connection.

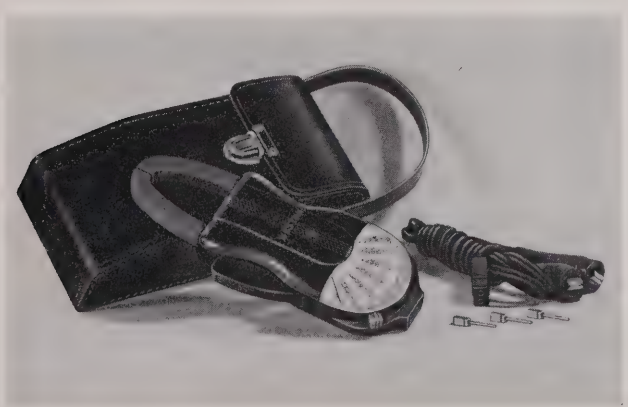

Clamp Volt-Ammeter, Divided Carrying Case, Voltage Test Leads And Three Probes

Model 749 Clamp Volt-Ammeter
Shown Approximately ½ Size

Model 9886 Plug-In Adapter

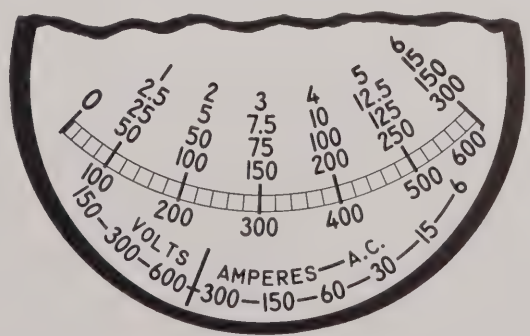

Model 749 Actual Size Scale

INDUSTRIAL CIRCUIT TESTER

Size: 13" x 12½" x 5½" (330 x 318 x 140 mm)
Weight: with batteries, oak case, etc.: 13½ lbs. (6.13 kgs.)

Multi-Purpose—28 Range Tester for:

- Communications Systems—Telephone—Radio, etc.
- Electronic Circuits and Equipment
- Lighting and Power Circuits
- Resistance—in all types of circuits
- Signal Systems—Police, Fire and Burglar Alarms
- Transformers, Loads and Wiring

Weston Model 785 is well established throughout Industry as the most complete single unit for general maintenance and ultra-sensitive test purposes, particularly on electronic equipment.

The widespread use of electronic devices and sensitive relays in circuits has created a definite need for this instrument, although its usefulness is by no means confined to sensitive circuit applications. General maintenance work such as checking motors, lighting circuits, etc., can be accomplished with a minimum expenditure of time.

One outstanding feature of its design is the arrangement permitting current and potential leads to be connected to the instrument at the same time for instantaneous current and voltage readings. All ranges required are instantly available and the wide selection of well overlapped ranges facilitates measurements in the best portion of the scale.

Whenever a control circuit fails to function it is often necessary to suspend operations until all the required instruments are assembled. This loss of time, with its consequent disruption of production schedules, can be eliminated by using an ultra-sensitive, multi-range Model 785.

A distinctive advantage of the Model 785 is that current and voltage ranges can be extended and insulation tested by the use of accessories described on page 14.

APPLICATION MEASUREMENTS

Capacitor Leakage Measurements: The sensitive ohm ranges on Model 785 makes these tests easy. Testing of paper capacitors should always be made using the top range. Leakages lower than 50 megohms can signify moisture presence which may result in unit breakdown.

Electrolytic capacitors utilized in power supplies can be rejected if the leakage resistance is below 600,000 ohms.

Insulation Resistance: Model 792 Insulation Tester when used in conjunction with Model 785 makes possible resistance measurements up to 900 megohms. With this arrangement a d-c potential of approximately 500 volts appears across the test prods for all values of circuit resistance above 50 megohms. For resistance below 50 megohms this voltage decreases gradually until at short circuit it is reduced to zero due to the internal protective resistance. The potential of 500 volts d-c was selected to conform with the recommendations of the A.I.E.E. The voltage is low enough to permit the measurement of leakage of all mica condensers and of all paper capacitors having a voltage rating of 150 volts or higher.

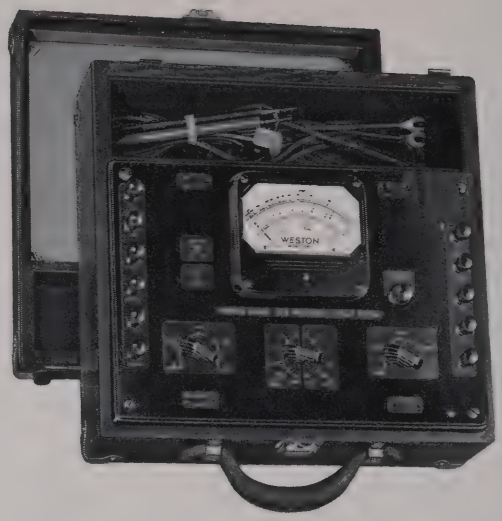

Model 785—Industrial Circuit Tester

Combination Measurements: To check relay circuits for both voltage and current, it is possible to make both the current and voltage connections to the test set and by simple rotation of the functional switch, readings can be taken.

High Current Ranges: Higher current ranges can be obtained by the utilization of an external current transformer such as Model 604. For complete details on this transformer refer to page 14.

SPECIFICATIONS

Standard Weston 4¼" instrument. D-c sensitivity 50 microamperes. New temperature compensated rectifier circuit gives greater a-c accuracy. Can be supplied in oak carrying case or steel case for bench use.

Ranges*

D-C VOLTS.....**Seven Full Scale Ranges Of:**
1/10/50/200/500/1000 volts (20,000 Ohms per volt), and 100 millivolts direct or for use with external shunts. Accurate wtihin 2% to 500 volts—3% at 1000 volts.

A-C VOLTS.....**Six Full Scale Ranges Of:**
5/15/30/150/300/750 volts (1,000 Ohms per volt). Accurate within 3%.

D-C CURRENT.....**Six Full Scale Ranges Of:**
50 Microamps.....1/10/100 Milliamps.....1/10 Amps. Accurate within 2%. Higher ranges, at full scale reading, with 100 mv. external shunts.

A-C CURRENT.....**Four Full Scale Ranges Of:**
.5/1/5/10 Amperes. Accurate within 3% on 60 cycles. Slightly less on 25 and 133 cycles. Higher ranges with external current Transformers.

RESISTANCE.....**Five Full Scale Ranges Of:**
3,000/30,000/300,000 Ohms.....3/30 Megohms
25/250/2,500/25,000/250,000 Ohms.....Center Scale
(Self-contained Batteries). Accurate within 2% of linear arc length on any ohmmeter range.

***For higher a-c and d-c ranges, see current transformer and shunt listings on page 14.**

A-C INDUSTRIAL ANALYZER

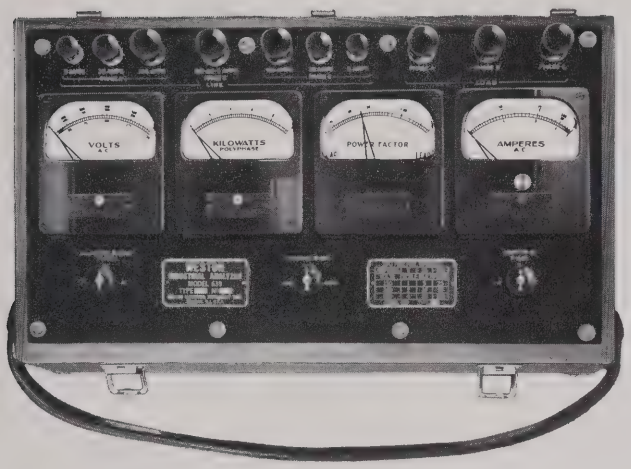

Model 639, Type 2 A-C Industrial Analyzer

Size..... { 18⅞" x 10⅞" x 6⅞" / 479 x 276 x 175 mm } Approx. Wt. 32 lbs. (14.5 kgs.)

Accurate within:

Voltmeter and Ammeter	1%
Power Factor Meter	1%
Wattmeter	2%

Frequency 25-125 Cycles **Scale Lengths 3.5" (89 mm)**

The Weston Model 639 Type 2, a complete power analyzer, has wide acceptance in industry, among plant maintenance men . . . utility service engineers . . . electrical contractors . . . marine service men . . . and those engaged in general testing or installation work.

Model 639 is designed to analyze industrial loads by measuring a-c current, voltage and power, in single and polyphase circuits; as well as power factor in 3 phase, 3 wire, balanced circuits. It is convenient, safe, compact, light-weight, rugged and portable.

The standard specified instrument accuracy for 25-125 cycles operation is cited in the tabulation under the appropriate column for the various frequencies. The second and third columns indicate the relative accuracies that can be expected for 200 and 400 cycle frequency measurements.

Compensation can be made for 200 cycle and 400 cycle operation for any specified range and instrument.

FEATURES

Instruments: Four Model 610 instruments (4" x 4½"), a Voltmeter, Ammeter, Wattmeter, and Power Factor Meter are included in its sturdy oak carrying case. These instruments contain the large, rugged mechanisms as used in the Weston 6" Line.

The Ammeter is equipped with an adjustable pointer stop to facilitate the rapid determination of the maximum value of starting currents. The Wattmeter has a single scale with the multiplying factors conveniently located on the instrument scale.

Safe: Internal connections eliminate possibility of "outage" due to improper connections; or damage to individual meters.

Heavy insulated binding posts are located at top away from operator. Instruments are placed along a horizontal centerline with all switches below.

The danger of interference with other equipment is minimized, due to less external wiring.

Model 639 is insulated for 1000 volt service.

Convenient . . . Saves Time: Model 639 is self-contained and all interconnections are made within the unit, thereby saving considerable time when power studies are being made . . . Only a few simple connections are necessary to place this instrument in circuit, eliminating the maze of interconnecting wires necessary when individual meters and transformers are used . . . Internal switches facilitate rapid measurement of all line currents and voltages . . . Complication of applying multiplying factors to scale readings, when using individual meters and transformers is avoided . . . Fine line scales with knife-edge pointers, and "straight-line" grouping of identical instruments, provides easy readability.

Low Burdens: Potential circuit per phase, 7 volt-amperes. Current circuit per phase, 6 volt-amperes.

High Overload Capacity: Current Circuits are designed to be used continuously at 25% above their rated values and may be subject to greater overloads for shorter periods of time.

Built In Accuracy: Current transformers are hand wound on nickel alloy ring type cores, making it possible to maintain the phase angle and ratio errors at a minimum which is well below transformers having joints and cores of ordinary material. The overall accuracy of the Wattmeter and Power Factor Meter is maintained even at low power factors as a result of the low phase angle of the transformers.

Series resistors are well spaced throughout Model 639 to provide maximum cooling for sustained operation and accuracy.

Ranges

Model 639 has self-contained potential ranges of 150/300/600 volts . . . current ranges of 5/25/125 amperes . . . and corresponding Wattmeter ranges . . . current and potential transformers may be used for extending these ranges.

Power factor indications are for 3-phase, 3-wire, balanced systems only . . . .30 lag through unity to .80 lead.

On 220 volt 3-phase circuits, the 5 ampere range will take care of loads to 1 hp on the 2 kw scale . . . on the 25 ampere range, up to 7½ hp on the 10 kw scale . . . on the 125 ampere range up to 40 hp on the 50 kw scale. At 440 or 550 volts the hp and kw ranges are doubled.

Accuracy Tabulation On 60 Cycle Instruments At Different Frequencies

INST.	RANGE	Accuracy % of Full Scale			INST.	RANGE	Accuracy % of Full Scale		
		25-125 cycles	200 cycles	400 cycles			25-125 cycles	200 cycles	400 cycles
AM.	All	± 1	± 1	+0.5 to —1.5	Vm	600	±1	±1	0 to —2
WATT.	All	± 2	+1 to —3	0 to —4	Vm	300	±1	0 to —2	—2.5 to —4.5
P.F.	All	±.01 P.F.	±.02 P.F.	±.03 P.F.	Vm	150	±1	—2.5 to —4.5	—13.5 to —15.5

TRUE MUTUAL CONDUCTANCE ELECTRON TUBE ANALYZER

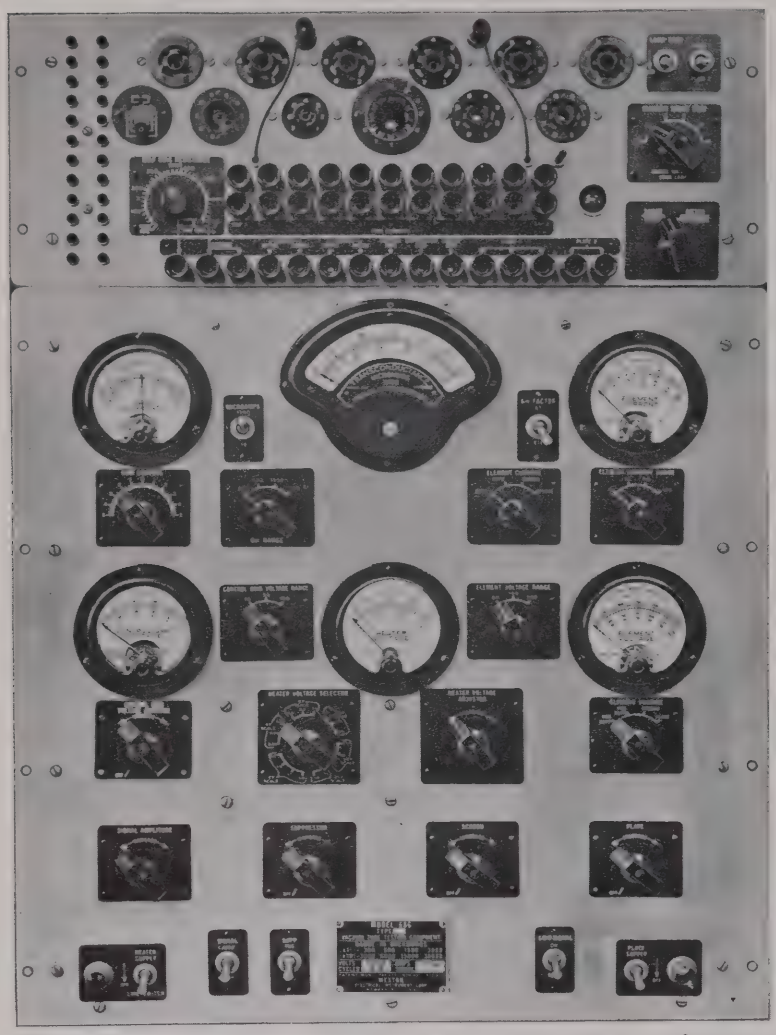

Model 686, Type 10A True Mutual Conductance Electron Tube Analyzer

A Complete Electron Tube Analyzer

Electronic Laboratories — *Accurate determination of tube performance under varied operating conditions . . . experimental tube circuits can easily be set up for study.*

Production Quality Control — *Tube tests on ordinary commercial testers are arbitrary . . . tests on the Model 686 are in complete accordance with the tube manufacturer's specifications.*

Technical Schools and Universities — *Ideal for student observation of tube behavior . . . exceptional flexibility permits testing of unlimited combinations of electronic tube characteristics . . . eliminates loss of time and expense involved in setting up laboratory experimental circuits and equipment.*

TESTS TUBES UNDER EXACT OPERATING POTENTIALS!

Model 686 Type 10A is more than just another tube tester . . . it is a complete "all purpose" electron tube analyzer. It offers for the first time in one instrument, two primary advantages:

1. Accurate testing of *true mutual conductance* of all tubes in accordance with the manufacturer's rated operating conditions, and—
2. Determination of *true mutual conductance* of all tubes at other values not in conformance with standard ratings and operating conditions.

This latter feature facilitates the study of tube performance for non-standard applications, and quickly indicates the suitability of the tube for the circuit under consideration.

The Type 10A provides far greater accuracy than any previous model since the exact amplification factor of the tube under test need not be known. This also eliminates the former slight error due to scale distribution on tubes having an Amp Factor below 20.

Readings in True Mutual Conductance

The application of an a-c signal to the grid of a properly operating tube will cause an a-c component to appear in the plate circuit. An a-c meter in the plate circuit will read in terms of true mutual conductance and may be so calibrated only if the plate circuit resistance and the power supply impedance are known and properly compensated, as in Model 686.

Note that the added sensitivity is especially useful for the measurement of subminiature tubes having low transconductances. The new circuit for measurement of transconductance makes the test independent of all other parameters so that the true Gm is obtained on all triodes and pentodes, even low mu control tubes, without use of correction factors or charts. The scale of the Gm meter has a single arc

TRUE MUTUAL CONDUCTANCE ELECTRON TUBE ANALYZER (Con't)

thus eliminating the chance of error in choice of scale arcs.

No manual adjustment of variable shunts or other networks to correct the final mutual conductance is needed. As a result, no special test data are required other than a knowledge of tube basing and electrode potentials.

In addition to providing for the basic measurement of mutual conductance, tubes may be analyzed for grid-plate and screen current. External components such as resistors, relays, inductors, photo-cells, etc., may be introduced in series or across the various tube elements for study of an experimental or operating electronic circuit.

Unit Description

The unit is divided into two sections. The lower section contains a well filtered d-c power source, with separate controls for each tube element potential. This enables the user to apply any desired d-c potential from 0 to+300 volts to the anode, screen or plate elements, and 0 to —100 volts regulated on the control grid. Adjustable a-c potentials are available in 18 steps from 0.6 to 117 volts covering all normal filament ratings.

The maximum rating of plate supply is 100 Ma at 300 volts and 120 milliamperes at 250 volts.

The lower section also has a complete set of meters and metering switches for the standardization of each tube for plate-screen-suppressor-control grid current and voltage, and heater voltage over the ranges indicated below. All power supply potentials terminate in a row of individual pin jacks.

A new ring shunt in the element milliammeter eliminates the effects of switch contact resistance and a special selector switch limits the voltage drop to a maximum of 75 millivolts.

In the upper section, a separate panel houses a hot leakage and short testing circuit, using a neon indicating lamp; and appropriate sockets for all receiving type tubes. A 500 ohm self-bias control in the upper section can be introduced into the cathode or filament return circuit. This control is suitably by-passed and may be used for any tube measurements under self-bias conditions. Each tube socket pin is brought out to an individual pin jack, permitting each element to be connected to the power source with flexible leads.

The basic design of this analyzer permits tube analysis under any operating condition within the range of the power supply and element measuring instruments. The flexibility of the element terminating arrangement provides maximum protection against obsolescence due to the introduction of new tube types.

SPECIFICATIONS

Power Requirements

115/230 Volts, 175 Watts, 50-60 Cycles A-C

Gm Ranges

	Signal Voltages			
	1.0	0.5	0.2	0.1
Micromhos (x1)	300	600	1500	3000
Micromhos (x10)	3000	6000	15000	30000

Power Supply Ranges

Filament Potentials.....(18 ranges) 0.6 to 117 Volts AC
Plate Potentials.....0 to 300 Volts DC
Screen Potentials.....0 to 300 Volts DC
Suppressor Potentials
0 to 60 Volts Negative, 0 to 300 Volts Positive DC
Control Grid Potentials.....0-10/0-50/0-100 Volts DC
Signal Voltage.....0.1/0.2/0.5/1.0 Volts AC
Power Supply Current.....100 Ma DC Maximum
Self Bias.....0 to 750 ohms by-passed by 1,000 μf capacitor

Meter Ranges

Filament Voltage Ranges.....2/4/8/20/50/125 Volts AC
Plate Voltage Ranges.....60/150/300 Volts DC
Screen Voltage Ranges.....60/150/300 Volts DC
Suppressor Voltage Ranges.....60/150/300 Volts DC
Plate Current Ranges.....3/12/60/120 Ma DC
Screen Current Ranges.....3/12/60/120 Ma DC
Suppressor Current Ranges.....3/12/60/120 Ma DC
Cathode Current Ranges.....3/12/60/120 Ma DC
Control Grid Current.....15-0-15/1500-0-1500 Microamperes DC
Grid Voltage Ranges.....10/50/100 Volts DC

ALL PURPOSE OSCILLOSCOPE

Model 983 — Oscilloscope

Size: 10" x 14" x 19.5" **Approx. Weight: 40 lbs.**

The Model 983 is a high gain, wideband Oscilloscope designed to accurately reproduce waveforms comprising a wide band of frequencies. High sensitivity of 15 millivolts per inch RMS makes this Oscilloscope ideal for—setting resonant traps . . . signal tracing in low level stages . . . as a general null indicator . . . for phase characteristic measurement in Industrial Applications . . . and for sweep frequency visual alignment of TV receivers.

The scope contains identical vertical and horizontal push-pull amplifiers with a choice of a-c or d-c coupling without affecting either sensitivity or bandwidth. Both amplifiers have compensated step attenuators and cathode follower input.

It has excellent square wave reproduction with overshoot of only 2 to 5% with a rise time of 0.1 microsecond. The scope response is essentially flat throughout the specified range of 4.5 mc and is usable to 6 mc.

The unit has provisions for internal voltage calibration, internal phased sine wave, and Z-axis intensity modulation. Reversal of polarity of both horizontal and vertical signals is easily accomplished by means of toggle switching. Tube replacements are non critical, and etched circuitry facilitates quick and rapid maintenance.

SPECIFICATIONS

Wide Band Frequency Response: Flat within 1.5 db from 0-3.6 mc and within –3 db to 4.5 mc on both vertical and horizontal amplifiers. Transient response: overshoot 2 to 5%. Rise time: 0.1 microsecond.

High Deflection Sensitivity: 15.0 millivolts per inch, RMS, on both vertical and horizontal amplifiers.

Phase Shift: Between horizontal-vertical amplifiers, 0-500 kc—0°, to 1 mc within 2°; by internal adjustment with gain controls at max 0° phase shift possible on any specific frequency to 6 mc.

Calibrating Voltages: 500 millivolts, 5 volts, 50 volts, 500 volts, peak to peak. Readily available and adjustable by front panel controls.

Z-Axis Modulation: Input terminal mounted on front panel.

Sweep Frequencies: 10-500,000 cps, variable. Preset TV/V position—30 cps. Preset TV/H Position—7875 cps. Retrace Time—better than 2% to 100 kc; at 500 kc less than 10%.

Internally Phased Sine Wave: Adjustable through 170°.

Vertical and Horizontal Polarity: Reversible.

Input Impedance: Vertical Amplifier (without Shielded Cable), 1 meg shunted by 60 mmf. Vertical Amplifier (with Shielded Cable), 1 meg shunted by 120 mmf. Vertical Amplifier (with Low Capacitance Probe). 2 meg. shunted by 15 mmf. Horizontal amplifier (without Shielded Cable), 1 meg shunted by 60 mmf.

Power Supply: 105/125 volts, 50/60 cycles.

Tube Complement: (1)-1V2, (1)-5U4-GA, (5)-6BQ7A, (4)-12BY7A, (4)-6AH6V, (1)-6U8, (1)-5UP1, (1)-0D3, (1)-5NO60T and (1)-6BK7A.

Case: Grey Hammertone finished steel.

Panel: Aluminum finish with etched, black markings.

TV Waveform Analysis

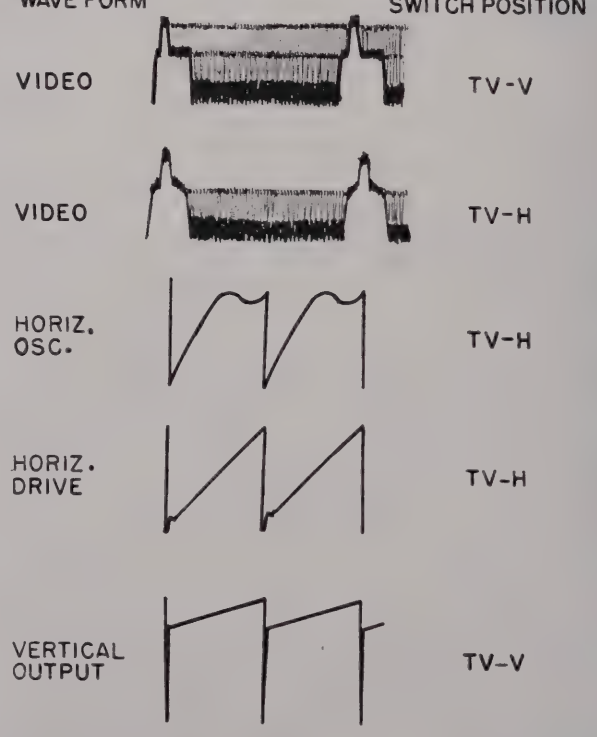

Sweep frequencies of 30 cycles per second are available by simply turning the sweep range switch to the desired range. A Z-axis terminal input on the front panel facilitates instrument test-hook-up when employing the Weston quick and accurate method of visual alignment.

Square Wave Response

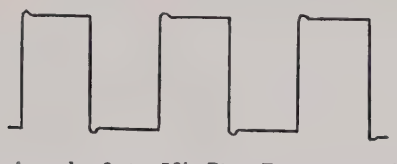

Overshoot is only 2 to 5% Rise Time is 0.1 Microsecond. Square wave depicted 800 kc. A fast, retrace sweep circuit with cathode follower output prevents pattern distortion.

Response Characteristics

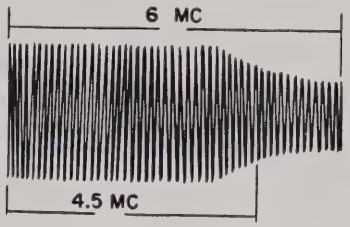

Note flatness throughout specified range; usable to 6 mc.

Audio Measurements

Cross-Over
Badly Matched Tubes

Clipping Due To
Grid Current

Transformer
Magnetizing Distortion

Oscilloscopes with identical amplifiers make audio amplifier analysis a relatively simple problem. The technique comprises connecting the amplifier input to the vertical input or Y terminal of the scope and taking the audio amplifier output across the voice coils and feeding the signal to the horizontal input. In this manner it becomes possible to determine the degree of phase shift or distortion present in the amplifier circuitry.

Phase Measurements

Vertical Signal In Phase With Horizontal Signal

Zero Phase Shift

Phase shift between horizontal-vertical amplifiers, 0-500 kc-0°, to 1 mc within 2°; by internal adjustment with gain controls at max 0° phase shift possible on any specific frequency to 6 mc.

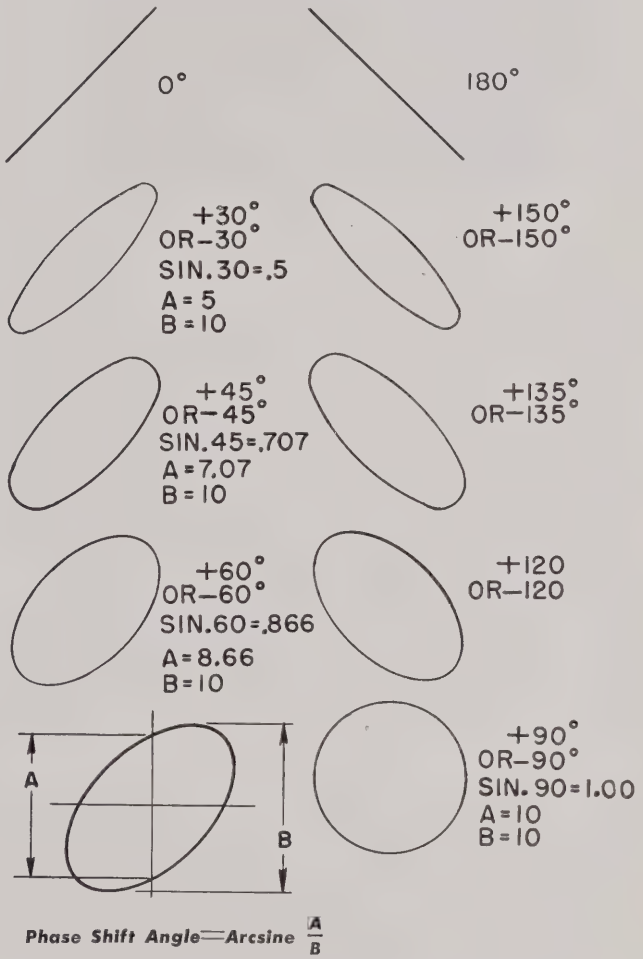

Phase Shift Angle = Arcsine $\frac{A}{B}$

By virtue of identical amplifiers Model 983 Oscilloscope is excellent for phase shift measurements. The phase shift angle is related to ratio of the distance A divided by the distance B. The A distance is the intercept on the vertical line and the B distance is the total height of the pattern.

Vertical-Horizontal Amplifiers

A 6BQ7A tube is employed as a wideband cathode follower. A gain control connected at the two cathodes serves as a variable resistance which effectively changes the output impedance. The low voltage level output available from the cathode follower is then amplified by three stages of direct coupled push-pull amplification.

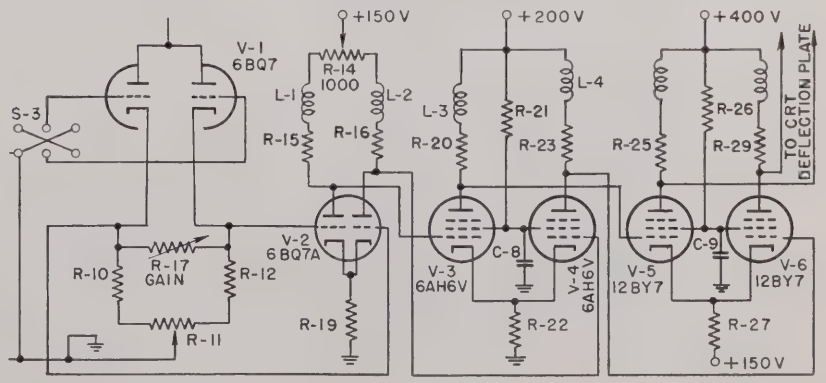

ALL PURPOSE ELECTRONIC TUBECHECKER

Model 981, Type 3—Tubechecker

Size: 17.50" x 13.25" x 6.00". **Weight: 23½ lbs. (10.7 kgs.)**

The Weston Tubechecker Model 981 Type 3 is a new functional tubetester of the Proportional Mutual Conductance type. This model has been especially designed to bring together in one instrument the best features in a portable tubetester. The instrument consists of a vacuum tube and voltage regulator tester and is mounted in one complete assembly within an attractive grey hammertone finished steel case. Constructed of high quality components to assure accuracy and dependability of performance, Model 981 provides for the accurate and rapid measurement of proportional mutual conductances, emission characteristics of rectifiers and diodes, and the firing potential limits of voltage regulators and low power thyratrons.

FEATURES

Gm Measurements—Gm measurements are made more accurately by using filtered d-c plate, screen grid and control grid potentials. A precision voltage divider network and selector switch allows a proportionate value of signal voltage to be chosen for testing tubes having transconductances up to 30,000 micromhos. Signal voltages of 5.2, 2.6, 1.3, and 0.65 volts peak-to-peak having a frequency of 5000 cycles are provided.

Leakage Test—The leakage tests are performed at a d-c potential of 125 volts. For each numbered position of the Leakage Test switch, a specific tube element is isolated and connected into a series ohmmeter circuit consisting of the isolated element, the 125 volt d-c potential, a current limiting resistor, a milliammeter, and all other elements of the tube.

Meter Measurement of High Leakage Resistance—The outstanding feature is the provision for accurate leakage measurement between tube elements. Since tube leakage as high as several megohms can cause poor performance in TV receivers, this tubechecker is designed to provide an accurate meter measurement of leakage resistance as high as 5 megohms between tube elements, thus being particularly useful for TV servicing and TV line production assembly.

Multiple Switching Facilities—Protection against obsolescence over the conventional tubechecker is assured through the use of nine single circuit, twelve position, selector switches.

Twin Section Tubes—Three toggle switches make it possible to rapidly check and compare the respective sections of twin section tubes at only one setting of the selector switches.

Roll Index Chart—A complete listing of tube test data is available at the flick of a finger by means of an easy-to-read, built-in roll chart.

Grid Bias, Screen Grid and Plate Voltage—Filtered d-c potentials of 90, 130, and 220 volts are available for plate and screen potentials. A variable filtered d-c voltage in two ranges of 0-5 and 0-20 volts are used to obtain better resolution of Grid Bias settings. Far greater accuracy is obtainable with filtered d-c potentials than previously possible in portable tubecheckers.

Constant Current Filament Supply—A 600 ma constant current source for checking warm up type tubes used in series string television.

Subminiature Type Tubes—A 45 volt potential source facilitates testing of subminiature tubes.

Voltage Regulator Tubes—A selenium rectifier supply furnishes 200 volts d-c for testing of voltage regulator tubes.

Single Socket for Each Tube Base Regardless of Tube Connection—Only one socket for each type tube base regardless of tube base connection eliminates the possibility of plugging a tube into the wrong socket.

SPECIFICATIONS

Filament Voltage:	.65, 1.1, 1.5, 2, 2.5, 0.6a, 3.3, 5, 6.3, 7.5, 10, 13, 20, 27.5, 35, 47, 70, 115.
Plate Voltage:	90, 130, 220 volts d-c. 22, 44, 160 volts a-c.
Grid Bias:	0-5V, 0-20 volts d-c.
Signal Voltages:	5.2, 2.6, 1.3, 0.65 volts peak-to-peak.
Gm Range:	Up to 30,000 micromhos.
Power Requirements:	100 to 125 volts, 60 cycles single-phase a-c, 30 watts.
Case:	Grey hammertone finished steel.

SIMPLIFIED VOLT-OHM-MILLIAMMETER

Model 980—Volt-Ohm-Milliammeter

Accuracy: 2%, d-c; 3%, a-c **Scale Length: 4.63"**

Size: 6.25" x 7.50" x 3.25" **Approx. Weight: 2 lbs., 11 ozs. (1.25 kgs.)**
(158.8 x 190.5 x 82.6mm)

The Weston Model 980 Volt-Ohm-Milliammeter is a highly sensitive, accurate and rugged instrument with an etched circuit and a combination of functional ranges which provide a wide range of test measurement applications in the electronic field. The instrument has a d-c sensitivity of 20,000 ohms/volt, and an a-c sensitivity of 1000 ohms/volt. Accuracy is 2% d-c, 3% a-c.

Range and functional switching is greatly simplified by use of a single dial for all ranges and functions.

VACUUM TUBE VOLTMETER

Size: 10" x 7.38" x 3.63" (254 x 187.3 x 92.1mm)

Weight: 6 lbs. (complete with batteries and accessories) (2.72 kgs.)

Accuracy: ±3% d-c, ±5% a-c RMS; sinusoidal wave form.

Impedance: 10 megohms d-c; 2.8 megs a-c RMS; 1 meg a-c, peak to peak.

Scale Length: 4.63"

The Weston Model 982 is a self-contained, battery operated Vacuum Tube Voltmeter. It is adaptable to the Radio-TV servicing industry where the requirements of peak to peak measurements of a-c voltages in high impedance circuits exclude the use of conventional peak-to-peak meters. It makes possible quantitative measurement of all complex wave form voltages utilized in video, sync and deflection circuits with no a-c line interference in critical measurements. Battery operation cost is considered less than price to operate a-c powered voltmeters.

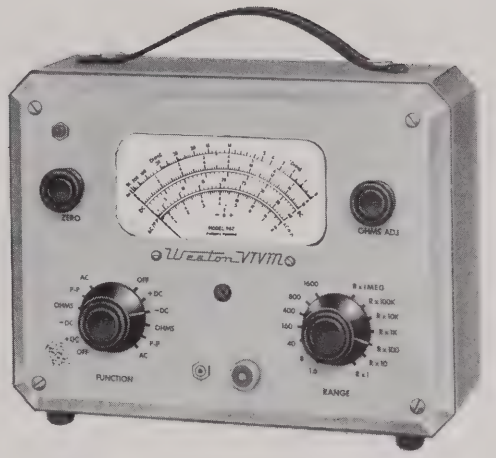

Model 982 — Vacuum Tube Voltmeter

FEATURES

Unit is Battery Operated—Unit affords complete isolation from spurious response due to stray a-c fields and circulating ground currents. Extremely low drain for long battery life. *Power Consumption: Less than 25 milliwatts.*

No Switching of Leads is Required—One shielded lead is used for all measurements, a-c, d-c, ohms and peak to peak.

Range Function Switch—Makes negative and positive d-c potentials measurable DIRECTLY.

High Input Impedance—10 megohms on d-c for accurate measurements—2.8 megohms a-c RMS—1 megohm a-c, peak to peak.

No Zero Scale Drift—Instrument can be used immediately without waiting for warm up . . . resetting of zero corrector when switching from range to range is entirely eliminated.

D-C Isolation Adaptor—Makes d-c measurements possible in the presence of a-c voltages. (Supplied with instrument).

Frequency Response—Suitable for measurement of TV wave forms, such as sync pulses, saw tooth, drive voltages, and other complex wave form voltages.

A-C Volts. 20 cps—1.5 kc. Peak-to-Peak Volts: 20—300 kc. For voltages above 160 volts peak-to-peak containing frequency components up to 300 kc a low capacitance probe is furnished.

Discriminator Alignment—Zero corrector knob has sufficient latitude to center scale.

RF Probe—Is available as an accessory.

Low Capacitance Adaptor—Makes peak-to-peak measurements possible with an input impedance of 10 megohms and a shunt capacitance of only 15 mmf. This circuit makes it easy to service TV horizontal and vertical sections with minimum circuit loading. (Supplied with instrument).

Reset Button: Facilitates rapid readings on peak-to-peak or AC measurements.

SPECIFICATIONS

Functions	Ranges						
D-C Volts	1.6	8	40	160	400	800	1600
A-C Volts	1.6	8	40	160	400	800	1200
P-P Volts	1.6	8	40	160	400	800	1600
Low-C Probe P-P Volts	16	80	400	1600			
Ohms	X1Meg	X100K	X10K	X1K	X100	X10	X1 (10 ohms center)

Battery Life: Battery A*—Approx. 90 days—is easily replaceable (Standard 1.5 Volt, Size D Cell). Battery B*—Shelf Life Approx. 1 year.

*Based on maximum use—8 hours per day.

Case: Grey hammertone finished steel.

Panel: Aluminum finish with markings etched in black.

Volt-Ohm-Miliammeter (Con't)

SPECIFICATIONS

Ranges: D-C Volts: 1.6, 8, 40, 160, 400, 1600.....at 20,000 Ohms/Volt
A-C Volts: 1.6, 8, 40, 160, 400, 1600.....at 1,000 Ohms/Volt
DB Range: — 15 db to + 54 db (in six ranges)
D-C Milliamperes: 8, 80, 800
D-C Microamperes: 80
D-C Amperes: 8

Ohms Range	Center Scale	Full Scale
R x 1	25	1,000
R x 10	250	10,000
R x 100	2,500	100,000
R x 1,000	25,000	1 megohm
R x 10,000	250,000	10 megohms

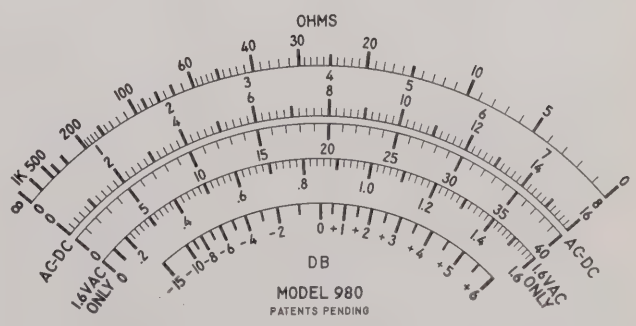

Case: Black molded bakelite.

Panel: Black molded bakelite with engraved white markings.

Model 984 — Sweep Generator

SWEEP GENERATOR

Size: 13.50" x 10" x 6.75" **(342.9 x 254 x 171.4 mm)**

Approx. Weight: 14 lbs., 4 ozs. **(6.47 kgs.)**

The Weston Model 984 is a top performance instrument precision built for effective trouble shooting of sound and video IF circuits, associated trap circuits, TV tuners, video amplifiers and all-purpose visual alignment. It has a high flat output voltage. Output voltage is flat within ±½ db over a 10 megacycle sweep width.

FEATURES

Blanking: Special circuitry produces a zero output reference base which is essential for relative gain measurements.

RF Output: Frequency modulated signal, TV channels 2 to 13 inclusive, complete FM coverage available by means of two preset selector positions. *FREQUENCIES ARE FUNDAMENTALS OF THE OSCILLATOR FREQUENCY.*

IF/Video Output: Frequency modulated signals ranging to 50 megacycles, continuous tuning, signals free from harmonics.

Sweep Width: Full 10 megacycles on all channels.

Scope Terminals: For scope without 60 cycles phased position.

Circuit Description: A 6T6 tube is used as a pushpull RF sweep oscillator. This oscillator is frequency modulated at 60 cycles by the mechanical motion of capacitor plates. A 60 cycle a-c voltage impressed across the voice coil actuates the plates of these capacitors and the relative motion of the coil is determined by the setting of the sweep width control. By means of the channel selector switch the appropriate channel center frequency is obtained. Coils utilized are the permeability type and are adjusted at the factory. The amplitude level of the RF output signal is controlled by the attenuator.

SPECIFICATIONS

Sweep Width: 0-10 Megacycles (continuously variable for both IF and RF).

Output Voltage (RMS): 0.1 Volt . . . sweep is linear.

RF Output: TV channels 2 to 13 preset. Complete FM coverage available by means of two additional preset selector positions.

IF/Video Output: 50 Megacycles (continuous tuning).

Horizontal Sweep for Oscilloscope: Phase adjustment range: 165° Frequency: Power Line 50-60 cycles per second.

Cable Termination: RF output 300 ohms balanced. IF output 100 ohms.

Power: 105/125 volts, 50-60 cycles.

Tube Complement: 6J6, 6U8, 12AT7, 6X4.

Case: Grey hammertone finished steel.

Panel: Etched aluminum satin finish.

ACCESSORIES FOR WESTON TEST EQUIPMENT

HIGH VOLTAGE PROBES—For Models 980-982

For measuring high voltages up to 20 kv at 50 microamperes or less. Probes consist of multiplier resistor encased in an insulated probe handle. Multipliers are rated with a flash voltage of 30 kv.

RF PROBE—For Model 982

Used in conjunction with a VTVM makes it possible to read RF voltages as high as 250 megacycles present in TV and radio receivers. Voltage is indicated in terms of rms on a sine wave.

LOW CAPACITANCE PROBE—For Model 982

For reducing the capacitive and resistive loading effects on the circuit under test. Makes possible peak to peak measurements with an input impedance of 10 megohms and a shunt capacitance of only 15 mmf.

ISOLATION PROBE—For Model 982

Used in conjunction with VTVM, the electronic function of the unit is performed by a 270 K resistor placed in series with the hot test lead. The resistor prevents interaction between the circuit under test and the voltmeter.

LOW CAPACITANCE PROBE—For Model 983

Used in trouble-shooting high impedance circuits to prevent loading. Has input impedance of 2 megohms shunted by only 15 micromicrofarads.

DEMODULATOR PROBE—For Model 983

For use in separating the modulation from the RF signal, and especially useful in signal tracing.

SHIELDED INPUT LEAD—For Model 983

Necessary in providing complete shielding from stray fields which may possibly distort the input signal.

CALIBRATOR

Size: 13.5" x 10" x 6.75" **(342.9 x 254 x 171.4 mm)**

Approx. Weight: 18 lbs., 12 ozs. **(8.51 kgs.)**

The Weston Model 985 Calibrator is a highly functional instrument for TV shop, engineering, laboratory, and industrial alignment applications. Intensity markers are provided for wave-form patterns, local tuner oscillator frequencies, and trap circuit alignment. The instrument is extremely useful for making linearity adjustments, calibrating signal generators, and determining signals of unknown frequencies.

Model 985 — Calibrator

FEATURES

Scale Calibration: The frequency calibration of each frequency setting can be checked and adjusted with crystal accuracy. Crystal calibrating points are available at 1.5 and 4.5 megacycles throughout the entire scale. *A scale shift knob is provided* to align properly the scale with the crystal calibrating dots. *A neon bulb indicates visibly the crystal frequency points.*

Scale Presentation: *Slide rule type in which one scale is visible at a time.* Ten scale range bands available . . . total scale length of 8¼ ft.

Dual Markers: 4.5 mc side band markers permit simultaneous observation of video and sound carrier.

Internal Markers: Special circuitry provides an internal marker of either a positive or negative pulse suitable for Z-axis intensity modulation of the scope pattern. This eliminates the necessity of feeding an RF calibrator signal directly into the TV receiver which can cause overload and oscillation in the TV set. *The marker is visible even at the sound trap frequencies.*

Heterodyne Detection: With an input sensitivity of 500 microvolts, the local TV receiver-tuner channel oscillator frequency can be determined without tuner disassembly.

Bar Pattern Generator: Amplitude modulated signals of the band oscillator at 400 cycles for the horizontal linearity check and 300 KC for the vertical linearity check can be readily fed to TV antenna terminals to produce horizontal and vertical bars.

Z-axis Circuit: Consists of a 6T4 variable oscillator from which a signal is injected into the 6BA7 mixer stage with an accompanying signal from the crystal oscillator. The input sweep signal is also applied to the mixer stage. A tuned plate load impedance selects the correct components which are then amplified by 12AT7 and 6CL6 amplifier stages and connected to the Z-axis output terminal.

Since the plate load of the mixer is tuned to 75 kilocycles, there will be two points at which the mixer will generate an output; one at 75 kc below the setting of the variable oscillator and the other 75 kc above the setting of the oscillator. The center between these two points is the correct frequency. A 6AL5 diode is used to clamp the rectified 75 kc amplified signal.

Zero Beat Indication Circuit: In the heterodyne detection circuit, the unknown signal frequency is injected in the mixer stage along with the variable oscillator frequency. The variable oscillator frequency is manually adjusted until zero beat is obtained as indicated by the neon bulb. When the frequency difference between the unknown signal and the variable oscillator becomes about 1 kilocycle, the neon bulb will light. The exact zero beat is indicated when the light is sharply extinguished. Calibration is achieved in the same manner except that in place of the unknown signal, the harmonic of the crystal oscillator is used.

SPECIFICATIONS

Frequency Range (with Variable Frequency Oscillator): 4-110 megacycles in 7 bands. 170-260 megacycles in 3 bands. Use of second harmonic is suitable for UHF—340-520 megacycles in 3 bands.

Output Attenuator Range: 100% to 1%.

Crystal Marker Accuracy: 1.5 mc position ±0.01%; 4.5 mc position ±0.01%.

Internal Modulation Frequencies: 400 cps, 300 KC, 4.5 mc.

Heterodyne Input Sensitivity: 500 microvolts.

Linearity Adjustment: Horizontal—400 cycles, Vertical—300 KC.

Dual Markers: Video and sound . . . available for either Z-axis intensity modulation of scope or conventional marker pip display.

Tube Complement: 6BA7, 12AT7, 6CL6, 6AL5, 6X4, 6T4.

Power Supply: 105/125 volts, 50/60 cps.

Scale Length: 8¼ ft.

Case: Grey hammertone finished steel.

Panel: Aluminum finish with etched black markings.

POCKET SIZE TESTERS

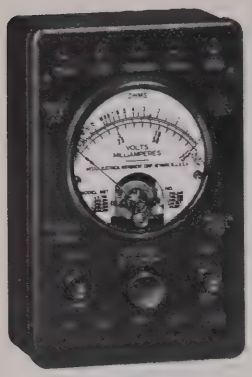

Model 697

MODEL 697 VOLT-OHM-MILLIAMMETER

ACCURACY: 2% D-C — 5% A-C **SCALE: 2.36" (60 mm)**

Size: 5 9/16" x 3 3/4" x 3 9/16" (141 x 95 x 65 mm) **Approx. Wt.: 1 3/4 lbs. (.794 kgs.)**

Low cost, light weight instrument with a well selected group of ranges to cover the majority of measurements required in electrical and electronic equipment. Ideal for portable use and small enough to be included in a kit of general maintenance tools. Test leads are supplied.

RANGES: 0-7.5/15/150/750 a-c and d-c (1000 ohms per volt)
CURRENT: 0-7.5/75 milliamperes d-c
RESISTANCE: Full scale 5,000/500,000 ohms — Center scale 35/3500 ohms

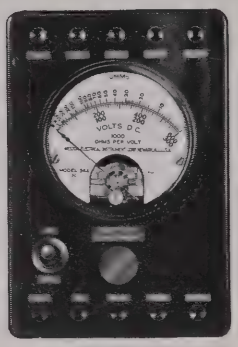

Model 564

MODEL 564 VOLT-OHMMETER

ACCURACY: 2% **SCALE: 2.36" (60 mm)**

Size: 5 3/64" x 3 45/64" x 2 9/16" (140 x 94 x 65 mm) **Approx. Wt.: 1 3/4 lbs. (.79 kgs.)**

For all general maintenance measurements on D-C equipment. Pocket size, convenient and easy to use. Test leads are supplied.

RANGES: 3/30/300/600 volts d-c (1,000 ohms per volt)
RESISTANCE: Full scale — 1,000/10,000/100,000/1,000,000 ohms

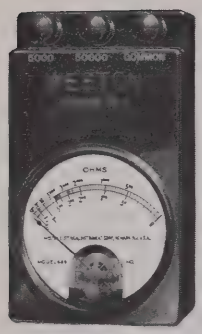

Model 689
Type 1-E

MODEL 689 OHMMETERS

ACCURACY: 2% **SCALE: 2.36" (60 mm)**

Size: 5" x 2 7/8" x 1 7/8" (125 x 73 x 47.6 mm) **Approx. Wt.: 1 lb. (.45 kgs.)**

Checks circuits by the resistance and continuity method. For production testing of armature and field resistance of small motors, relay and coil testing and other electrical components. Test leads are supplied.

RANGES: Type 1-E—double range 0-5,000 and 50,000 ohms-full scale
Type 1-F—double range 0-10 and 0-1,000 ohms-full scale

Model 779

SUPER-SENSITIVE ANALYZER MODEL 779

ACCURACY: A-C within 3%; D-C within 2% to 250 volts; 3% on 1,000 volt range.

Size: 6 3/8" x 9 1/8" x 4 7/8" (162 x 232 x 124 mm) **Approx. Wt.: 6 lb. (2.72 kgs.)**

A compact 26 range ultra-sensitive analyzer with five d-c voltage ranges at a sensitivity of either 1,000 or 20,000 ohms per volt. A-C temperature compensated; precision resistors throughout. Supplied in a rugged solid oak case with a removable cover and convenient carrying handle. Test leads are provided.

RANGES

Volts D-C	Volts A-C	Current D-C Only	Decibels	Ohms
2.5	2.5	.1 Ma	— 14 to + 2*	0-3000
10	10	1 Ma	— 2 to + 14*	0-30,000
50	50	10 Ma	+ 12 to + 28*	0-300,000
250	250	50 Ma	+ 26 to + 42†	0-30 Meg
1000	1000	250 Ma	+ 38 to + 54††	
		1 Amp	(6 milliwatts,	
		10 Amp	500 ohms, zero level)	

*Substantially flat to 10,000 cycles.
†Substantially flat to 3,000 cycles. ††Substantially flat to 1,000 cycles.

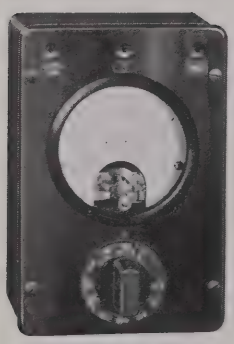

Model 695
Type 11

MODEL 695 POWER LEVEL METER, VOLTMETER, OUTPUT METER

ACCURACY: 5% **SCALE: 2.36" (60 mm)**

Size: 5 3/64 x 3 45/64 x 3 1/8" (140 x 94 x 79.4 mm) **Approx. Wt.: 1 1/2 lbs. (.68 kgs.)**

Type 11

RANGES: Seven a-c ranges from 2 to 200 volts
Eleven db ranges from — 4 to + 36 db
REFERENCE LEVEL: 6 milliwatts, 500 ohms

Type 14

RANGES: Seven a-c ranges from 2 to 200 volts
Eleven db ranges from +7 to +36 db
REFERENCE LEVEL: 1 milliwatt, 600 ohms

All ranges of both types of instruments have a constant impedance of 20,000 ohms.

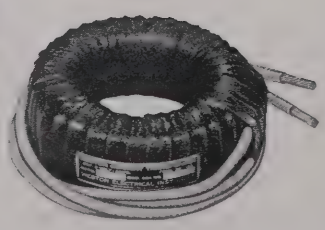

Model 604

MODEL 799 INSULATION TESTER

ACCURACY: Within 1/8" of scale length. **SCALE: 2.375" (60.3 mm)**

Size: 3 3/16 x 5 1/4 x 5" (86 x 133 x 127 mm) **Approx. Wt.: 3.8 lbs. (1.7 kgs.)**

For leakage measurements up to 10,000 megohms at low voltage at a maximum test potential 50 volts. Test leads, tubes, batteries and oak case are supplied.

RANGES: 0-10,000 megohms (Logarithmic scale)

Accessories

MODEL 604 CURRENT TRANSFORMER

Inserted primary type used to increase a-c current range of Model 785. Type 1, accuracy 1% on frequencies from 25 to 125 cycles, capacity 2 volt-amperes. Type 2, accuracy 1% on frequencies from 50-125 cycles, capacity 5 volt-amperes. Ratios include 200:5, 300:5, 400:5, 500:5.

100 MV EXTERNAL SHUNT

Used for extending d-c current ranges of Model 785 beyond 10 amperes. Available in 50, 100, 250 and 500 amperes.

MODEL 792 INSULATION TESTER

For insulation and cable resistance measurements up to 900 megohms at a test potential of 500 volts when used with Model 785 or 779. Operates from any 100-130 volt, 50 to 60 cycle line.

CARRYING CASES

When ordering please specify model number of instruments with which they are to be used. Cases available for Models 564, 689, 695, 697, 980 and 982.

WESTON SIMPLIFIED METHOD OF VISUAL ALIGNMENT

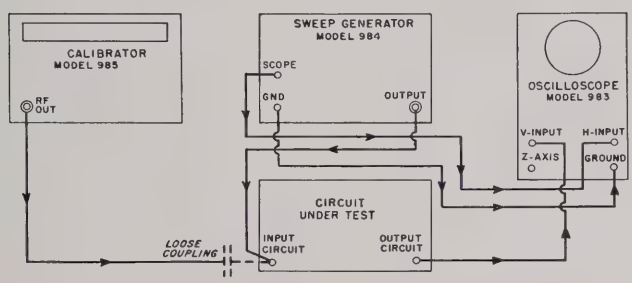

Conventional Method of Visual Alignment

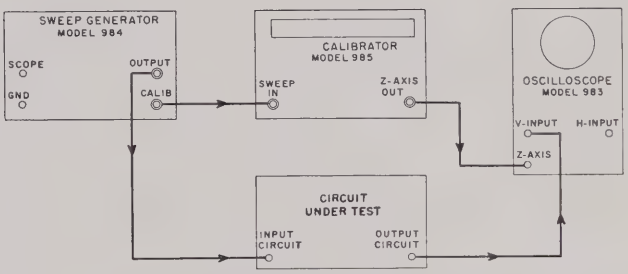

Weston Simplified Method of Visual Alignment

With the instruments listed in this Catalog, Weston offers the most simple, accurate, and rapid method of visual alignment. If you have been annoyed with the disappearance of markers at trap resonant frequencies, disturbed with trimmer touch-up on trap circuits after a completed alignment procedure, troubled with receiver oscillations in your test hook-up or cirtical coupling in your test alignment hook-up, then this new approach to visual alignment is just what you've been looking for.

In the Weston method, it is unnecessary to connect the calibrator to the circuit under test, thus eliminating spurious markers which can be generated by intermodulation of the calibrator signal with that of the circuit signals. Use of only two connections to the unit prevents receiver oscillations encountered with the conventional method of multiple lead test hook-up. Note block diagrams shown above.

Further, there is no disappearance of markers at trap resonant frequencies. Z-axis modulation of the scope provides accurate intensity markers on the response curve under conditions where beat note markers would disappear. Response curves are not disturbed. Annoying trimmer touch-up on trap circuits is minimized. This simplified and rapid method of alignment is only possible when the companion instruments — Weston Calibrator Model 985 and Sweep Generator Model 984—are used with a scope having provisions for Z-axis intensity modulation. However, individual instruments in the Model 980 Line can be used with available test equipment in the conventional method of alignment.

WARRANTY

These products are warranted to be of good workmanship and quality and free from defects in manufacture. Our liability is limited to repairing such defects, providing return is made prepaid to the Service Division, Weston Electrical Instrument Corporation, Newark 5, N. J. within one (1) year after delivery to the original purchaser, except for electron tubes and batteries utilized in this equipment for which the warranty period is ninety (90) days. We shall not be liable for consequential damages. This warranty is in lieu of all other warranties, guaranties, liabilities or obligations, statutory or implied, to the original purchaser or to any other person.

Printed in U. S. A. 5-56

WESTON REPRESENTATIVES IN THE FOLLOWING CITIES

ALBANY—Carse Electric Corporation

ATLANTA—E. A. Thornwell, Inc.

BALTIMORE—Thomas H. Closs

BOSTON—Cowperthwait and Brodhead

BUFFALO—Cooper-Morgan, Inc., Hamburg, N. Y.

CHARLOTTE, N. C.—Ranson, Wallace & Company

CHICAGO—Weston Electrical Instrument Corp.

CINCINNATI—The Beedle Equipment Co.

CLEVELAND—Ambos-Jones Company

DALLAS—Butler and Land

DAYTON—The Beedle Equipment Co.

DENVER—Peterson Company

DETROIT—T. S. Cawthorne Company

HOUSTON—Lynn Elliott Company

JACKSONVILLE—Ward Engineering Co., Inc.

KANSAS CITY, MO.—C. B. Fall Co., Hickman Mills

KNOXVILLE—A. R. Hough

LITTLE ROCK, ARK.—Curtis H. Stout

LOS ANGELES—Edward S. Sievers

MEMPHIS—Curtis H. Stout

MIDDLETOWN, CONN.—Dittman & Greer, Inc.

MILWAUKEE—Erwin T. Higgons

MINNEAPOLIS—Pinkney & Hine

NEWARK, N. J.—Hemion and Bertram

NEW ORLEANS—W. J. Keller

NEW YORK—Weston Electrical Instrument Corp.

ORLANDO, FLA.—Ward Engineering Co., Inc.

PHILADELPHIA—Joralemon, Craig and Co.

PHOENIX—J. E. Redmond Supply Co.

PITTSBURGH—Russell F. Clark Co.

ROCHESTER, N. Y.—H. J. Rittenhouse Company

SAN FRANCISCO—Herman E. Held

SEATTLE—Eicher & Company

ST. LOUIS—C. B. Fall Company

SYRACUSE—Naylor Electric Company

TULSA, OKLA.—Riddle and Hubbell Company

WASHINGTON, D. C.—Weston Electrical Inst. Corp.

CANADA

Northern Electric, Ltd.

Powerlite Devices, Ltd.

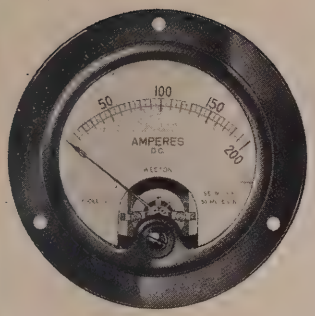

MODEL 301 ROUND

MODEL 476 RECTANGULAR

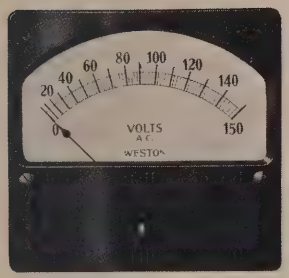

MODEL 964

MODEL 962 VU

WESTON PANEL INSTRUMENTS

Weston Panel Instruments are noted for their sustained accuracy and long term reliability. They are available in a wide selection of ranges for all industrial, electronic, TV and radio requirements, including a-c and d-c power, radio frequency, rectifier types, DB and VU meters.

Flush or surface mounting cases, in metal or Bakelite, round or rectangular . . . . 2½", 3½" 4" and 4½" sizes.

SREPCO INC.
314 LEO STREET
DAYTON 4, OHIO

CIR. A-41-A 4-54

PRINTED IN U. S. A.

WESTON *Instruments*

FOR PRODUCTION TESTING MAINTENANCE • SERVICE

WESTON INSTRUMENTS *for*

- ☆ MAINTENANCE
- ☆ PRODUCTION
- ☆ RESEARCH

Virtually any electrical instrument requirement whether for a single range voltmeter, a sensitive multi-range tester or a light meter can be met by Weston. The Weston Line of Instruments includes practically every type required for measuring electrical quantities in manufacturing test procedure . . . in electrical maintenance . . . in the laboratory . . . and in lighting surveys.

The instruments illustrated and described in this circular are only typical of the broad Weston line, whose dependability is assured by a craftsmanship gained over sixty years in the manufacture of fine electrical instruments.

ALL-PURPOSE ELECTRONIC TUBECHECKER
Model 981 Type 2

This tubechecker incorporates in one instrument the best features obtainable in a portable tubechecker. Provides for measurement of proportional mutual conductances, emission characteristics of rectifiers and diodes, firing potential limits of voltage regulators and low power thyratrons, as well as meter measurement of leakage resistance between tube elements. Multiple switching protects against obsolescence over the conventional tubechecker.

"3 IN 1" VACUUM TUBE VOLTMETER
Model 769

This analyzer provides in one instrument facilities for practically all electronic measurements. Protected from external RF influence, being both line isolated and line insulated. Designed primarily for FM, AM and TV service work, its remarkable stability and broad range make it ideal for many other applications in the high frequency and very high frequency fields.

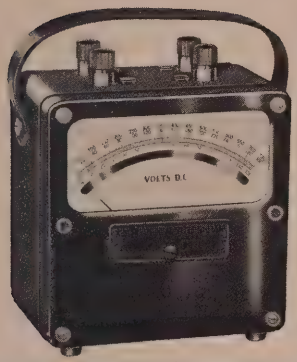

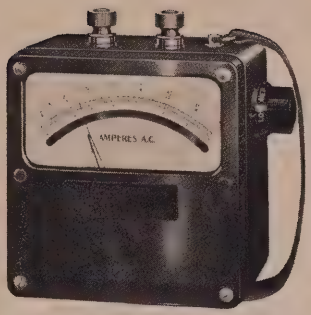

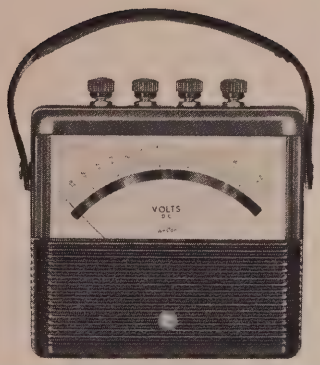

GENERAL PORTABLE INSTRUMENTS

Model 931 Group

These instruments, although moderate in cost are the ultimate in test equipment design—portability, readability, sustained accuracy. These outstanding features, combined with light weight and long easy-to-read scales provide utilities, plant maintenance groups and contractors with a matched group of portables for production and general a-c and d-c testing.

Model 901 Group

A matched group of portable instruments, enclosed in ribbed all-Bakelite case, modern in design featuring a curved, shadow reducing, "wide-angle" window. The window is clear, non-breakable and is specially treated against electrostatic effects. Long 5½" hand calibrated mirror scales and knife edge pointers, coupled with high shielding recommend this group for general testing.

Weston Current or Potential Transformers are available where greater range coverage is required.

INDUSTRIAL LOAD ANALYZER

Model 639

A complete power analyzer for general testing or installation work. Dependable measurements of a-c current, voltage and power in single and polyphase circuits; a few simple connections place this instrument in circuit, eliminating the use of interconnecting wires when individual instruments are used. . . . Fine line scales, knife-edge pointers and "straight-line" grouping of identical instruments provide easy readability.

LIGHT MEASURING INSTRUMENTS

The importance of good lighting to human comfort, productivity and safety make these versatile instruments invaluable for lighting surveys. Completely self-contained and permanently calibrated, they are direct reading in filter types for all kinds of commercial lighting. Ideal selling tools in the promotion of better lighting in factories, homes and offices.

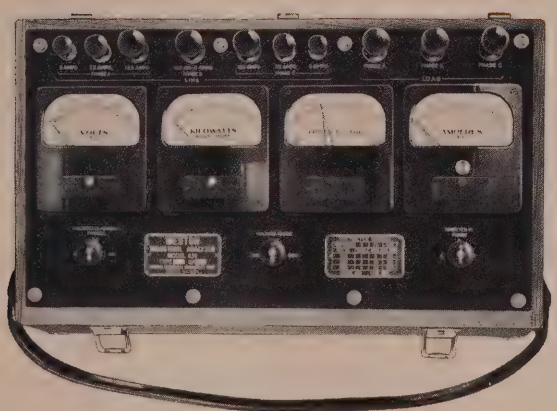

MODEL 756

MODEL 614

MODEL 703

POCKET SIZE TESTERS
Models 697 & 689

Pocket size instruments for a wide variety of maintenance, production and inspection applications where portability and reasonable accuracy are required. Low cost, light weight instruments with a well selected group of ranges to cover the majority of measurements required in electrical and electronic equipment. Small enough to be included in a kit of maintenance tools.

A-C CLAMP VOLT-AMMETER
Model 633 Type VA-1

Clamp Volt-Ammeter measures a-c current without breaking the circuit and voltage. On the job measurements of current by simply clamping jaws around insulated or non-insulated conductor . . . voltage measurements by attaching leads to terminals, flicking selector switch to "Volts", and connecting fool-proof test clips to voltage source.

ULTRA-SENSITIVE CIRCUIT ANALYZER
Model 779

A compact 26 range ultra-sensitive analyzer with d-c voltage ranges at a sensitivity of either 1,000 or 20,000 ohms per volt. A-c temperature compensated. Precision resistors throughout. Rugged solid oak case with carrying handle . . . removable cover. Used for measurement of tube circuits, TV and wire communication systems.

MULTI-PURPOSE INDUSTRIAL CIRCUIT TESTER
Model 785

Multi-Range — Multi-Purpose — Ultra Sensitive Analyzer for a wide range of Industrial and Laboratory checking of electronic and electrical circuits. Ideally suited for general maintenance and ultra-sensitive test purposes. All 28 practical ranges are readily available. Current and potential leads can be connected at the same time for instantaneous current and voltage readings.

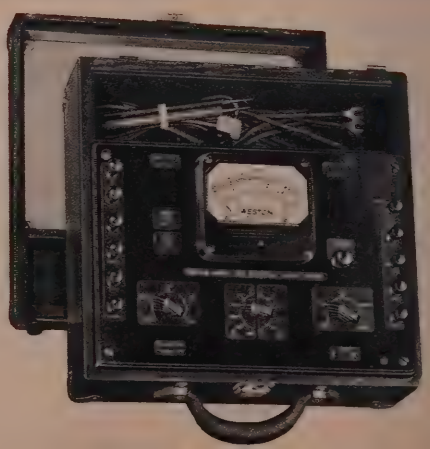

GENERAL INSTRUCTIONS FOR THE USE OF WESTON THERMOCOUPLE TYPE INSTRUMENTS, ULTRA HIGH FREQUENCY TYPE

The ultra high frequency thermocouple type Weston thermo ammeter secures its high accuracy through the use of a heating element having a high frequency resistance so little different from that at low frequency that even at 100 megacycles the error is less than 3½%. To this heater is welded the thermocouple which in turn actuates the direct current movement. The wiring between the thermocouple and the direct current movement is made concentric to minimize the effect of R. F. pick-up.

The frequency error of the Weston thermocouple type instrument is less than 6.5% up to 150 megacycles when considering the instrument in free space. The inherent loop of the leads to the instrument may, however, tend to crowd the current to one side of the heating element which may increase the error somewhat, although up to 100 megacycles the effect is less than an additional 2%.

It is desirable that the instrument be kept out of strong radio frequency electrostatic or electromagnetic fields. This can usually be arranged by placing the instrument in a position where these fields are at a minimum, and it is strongly recommended that this be done. Strong fields tend to create eddy currents in the instrument structure and while the internal instrument wiring has been arranged to present a very small loop area, eddy currents or circulating currents due to strong high frequency fields may cause damage. To minimize such effects, the instrument base is made of low loss undyed bakelite, yellow in color, and the ultra high frequency instruments may be so identified.

If mounted in a metal panel or a metal stand of any sort, a potential of not over 300 volts should exist between such a metal support and one of the instrument terminals. Generally speaking, it is advisable to connect any metal on which the instrument is supported to one of the instrument terminals or else mount the instrument in an insulating panel. Otherwise displacement currents may flow through the small thermocouple, the instrument mechanism, and through the bakelite case to the supporting member, causing damage to the internal structure. The stud marked "G" on self-contained instruments, or the stud marked "H" on external thermocouple type instruments, is connected to all metal parts inside the instrument case. This is done to prevent displacement currents from flowing other than through a metallic connection, and also to bring all parts to approximately the same potential to prevent insulation breakdown and electrostatic attraction of the pointer.

On the reverse side of this sheet are connection diagrams of thermocouple type switchboard instruments as used in the more common circuits. Both self-contained and external element applications are shown.

The circuits using external heating elements are shown with two types of cable connections between heating element and instrument. Shielded duplex cable or unshielded triplex cable may be used; whenever possible, however, the shielded duplex cable should be used and the outer shield utilized as the third conductor. If the unshielded triplex wire must be used, the conductors should be twisted together to insure a minimum of R. F. pickup.

Instruments with external elements are adjusted to a definite d-c circuit resistance (couple circuit) and any change from the specified value will affect the instrument accuracy. The insertion of resistance such as the use of an R. F. choke requires special provision in the design of the instrument.

In special applications, or where difficulty appears to be had in obtaining correct readings at high frequencies, the Engineering Department of the Weston Electrical Instrument Corporation will be glad to review diagrammatic layouts covering the location of instruments in high frequency systems.

DESCRIPTION OF DIAGRAMS SHOWN ON REVERSE SIDE OF THIS SHEET

No. 1 shows a self-contained thermal ammeter with metal case on an insulating panel, or on a metal panel with low voltage to ground.

No. 2 shows a self-contained thermal ammeter with bakelite case; if metal panel, potential between it and terminals should not exceed 300 volts.

No. 3 shows a thermal ammeter with metal case and with external heating element connected with unshielded 3 wire cable.

No. 4 shows a thermal ammeter with bakelite case and with external heating element connected with unshielded 3 wire cable.

No. 5 shows a thermal ammeter with metal case and with external heating element connected with shielded 2 wire cable.

No. 6 shows a thermal ammeter with bakelite case and with external heating element connected with shielded 2 wire cable.

No. 7 shows a thermal ammeter with metal case and external heating element connected by unshielded 2 wire cable, including R. F. chokes and drainage condensers.

No. 8 shows a thermal ammeter with bakelite case and external heating element connected by unshielded 2 wire cable, including R. F. chokes and drainage condensers.

No. 9 shows a thermal ammeter with metal case and external heating element connected by shielded 2 wire cable, including R. F. chokes and drainage condensers.

No. 10 shows a thermal ammeter with bakelite case and external heating element connected by shielded 2 wire cable, including R. F. chokes and drainage condensers.

No. 11 shows a thermal ammeter with metal case, external heating element, insulating coupling transformer and unshielded 3 wire cable.

No. 12 shows a thermal ammeter with bakelite case, external heating element, insulating coupling transformer and unshielded 3 wire cable.

No. 13 shows a thermal ammeter with metal case, external heating element, insulating coupling transformer and shielded 3 wire cable.

No. 14 shows a thermal ammeter with bakelite case, external heating element, insulating coupling transformer and shielded 3 wire cable.

No. 15 shows a self-contained thermal ammeter with metal case mounted in metal panel with insulating mounting ring.

No. 16 shows a self-contained thermal ammeter with bakelite case mounted in metal panel with insulating mounting ring.

WESTON ELECTRICAL INSTRUMENT CORP. • Newark–5, N. J.

FORM 1574 10M 8-43

PRINTED IN U. S. A.

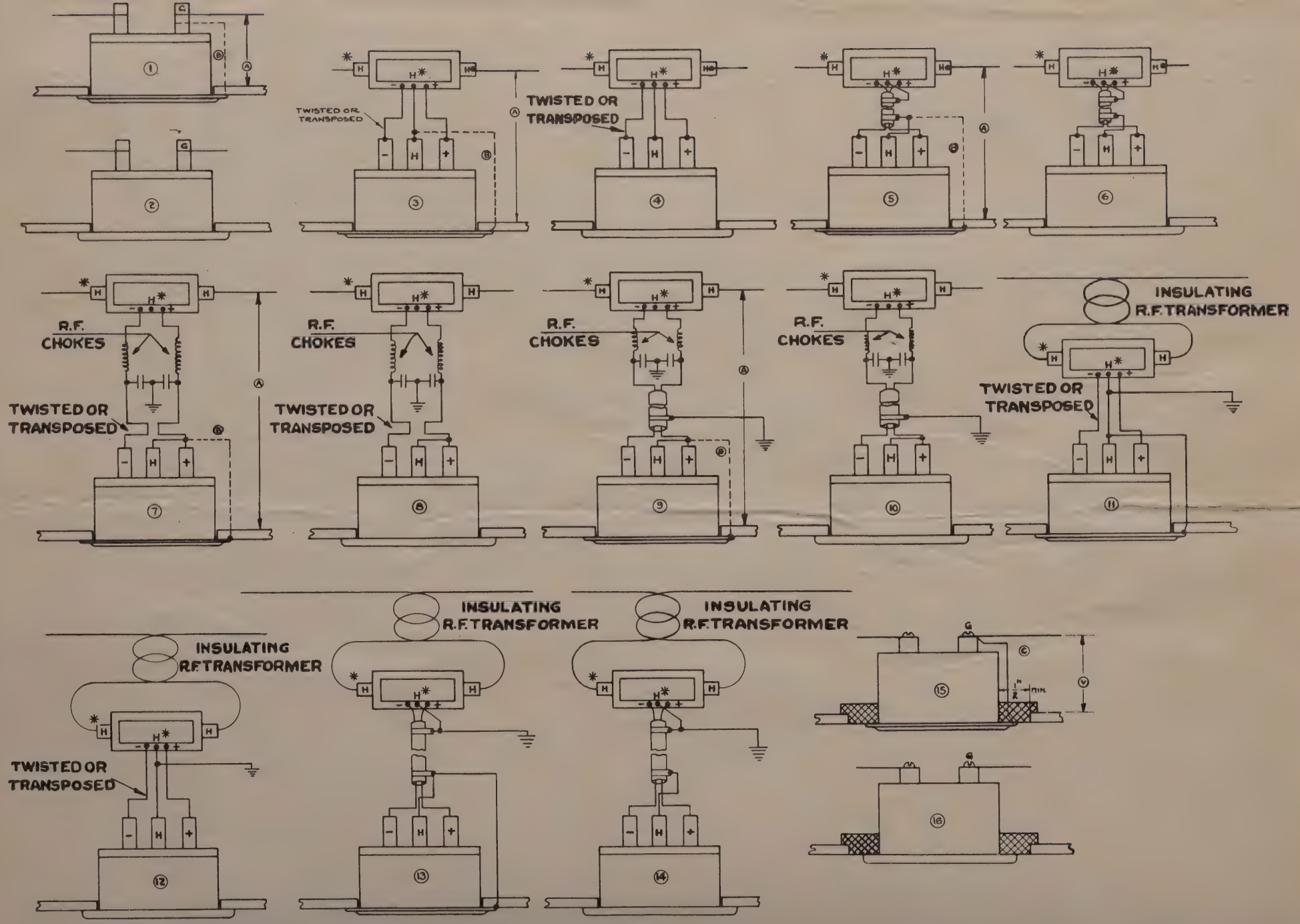

NOTES

A. IF PANEL IS METAL, VOLTAGE MUST NOT EXCEED 300 VOLTS.

B. IF PANEL IS OF INSULATING MATERIAL, CONNECT CASE TO STUD AS SHOWN.

C. WHEN METAL PANEL IS USED AND VOLTAGE V:O, INSULATING RING MAY BE OMITTED.

D. THE MIDDLE TERMINAL "H" ON THE EXTERNAL HEATING ELEMENT IS CONNECTED TO THE CURRENT TERMINAL "H", BOTH OF WHICH ARE MARKED WITH AN ASTERISK.

E. CONNECT THE CURRENT TERMINAL MARKED WITH AN ASTERISK IN THAT PORTION OF THE CIRCUIT WHICH IS NEAREST TO GROUND POTENTIAL.

WESTON *Instruments*

JUL 16 1953

Distributed By

GraybaR
ELECTRIC COMPANY

The purpose of this bulletin is to provide general information and prices, in a concise and simplified form, for a selected group of Weston Portable Test Instruments.

Light in weight, simple and convenient to use, these instruments are particularly suited for accurate measurements in all types of electrical and electronic circuits as applied to industrial production, testing, maintenance, and laboratory work.

While constituting only a small part of the extensive Weston line, their accuracy, easy readability and sturdy construction are representative of the skillful craftsmanship and engineering design built into all Weston products.

It is our policy to render service on Weston instruments to satisfy your requirements to the greatest possible extent. Due to the many and varied applications of electrical test instruments in modern industry, we place at your disposal our trained service personnel and the experience and facilities of the Weston Electrical Instrument Corporation.

How To Order

The following data are essential when ordering Weston Test Instruments and should accompany each order to insure receiving the proper equipment.

1. Model Number and Range
2. Direct or Alternating Current
3. Sensitivity (if other than listed)
4. Leather Carrying Case

Weston Light Measuring Instruments are supplied either with or without *Viscor Filters. Unless otherwise specified, the *Viscor Filter type will be furnished.

Note: Only a limited number of commonly used ranges are listed in this bulletin . . . any practical range can be supplied.

**A registered trade-mark designating the visual correction filter available only in Weston †Photronic Cells and Illumination Meters. Instruments equipped with *Viscor Filters measure correctly the visual intensity of practically all light sources.*

†A registered trade-mark designating the photoelectric cells and devices manufactured exclusively by Weston Electrical Instrument Corporation.

A-C CLAMP AMMETERS

Model 633—For Convenient and Rapid Measurement of A-C Current without breaking the Circuit . . . Determining Load Conditions . . . Unbalanced Circuits . . . Safe . . . Rugged . . . Versatile.

Accuracy within 3% . . . 50 Scale Divisions . . . Scale Length 2.36".
Frequency 50 to 70 cycles . . . Voltage Breakdown Test 3700 Volts A-C.
Jaws take Insulated or Non-Insulated Conductors up to 2" in Diameter.
6 Self-Contained Scale Ranges, Controlled by Simple Thumb Switch.

Model 633 Dimensions 13⅝" x 4⅜" x 2½" . . . Weight 3¾ lbs. . . . Rugged Black Bakelite Case . . . Extra Heavy Glass Over Instrument Scale . . . Clamping Jaw Insulation—Long Service, Replaceable Rubber Sleeve . . . Provision for Carrying Strap . . . Leather Carrying Cases . . . Instrument is Readily Removable for Remote Indication.

Model 633

EASY TO USE . . .

• Simply place the clamping jaws around the conductor . . . flick the thumb-switch to the proper range . . . note the reading.

Lower full scale ranges can be obtained by coiling the conductor, and placing the clamping jaws around two or more turns of the coil. For example, the full scale range of ten amperes becomes 5 amperes when two turns are used; 2.5 amperes with four turns, etc.

CONVENIENT . . . SAFE . . .

• Its compact size permits measurement of a-c current in many otherwise inaccessible places . . . the correct range for the particular application is readily selected with the same hand that holds the clamp ammeter. The instrument is well insulated as a protection to the user . . . as a protection against short circuiting conductors . . . and as assurance against breakdown while in use.

REMOTE INDICATION . . .

• Current measurements can be made with the instrument located up to 50 feet, or more, from the clamping jaws without any sacrifice in accuracy. It is only necessary to remove the indicating instrument from the clamp-ammeter, and insert it in the receptacle provided on one end of the extension cable . . . the plug end of the cable is then inserted in the clamp-ammeter. A switch inside the case short circuits the secondary of the transformer when the indicating instrument is removed.

"HOT STICK" READINGS . . .

• The Clamp-Ammeter can be used with a "hot stick" for current measurements on high voltage lines. Extension poles equipped with clamp-ammeter adapters are available at electrical jobbers. The clearly marked scale, pear shaped pointer and instrument damping facilitate reading current values at a distance.

*RANGES

Type A-1	500/250/100/50/25/10 amperes	$112.50
A-2	1000/500/250/100/25/10 amperes	$120.00
A-3	2000/1000/500/250/100/50 amperes	$127.50
	50 ft. cable, plug, and receptacle	$ 72.00

*Cannot be used for continuous duty on ranges above 500 amperes.

All types are available on special order with adjustable pointer stop which allows the maximum value of starting current to be quickly determined. Surcharge for adjustable pointer stop ..... $ 7.50

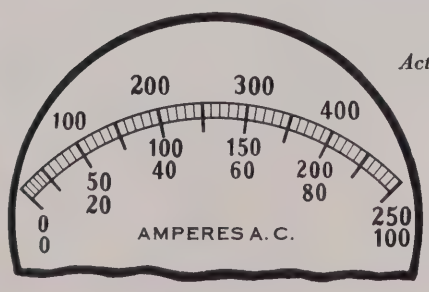

Actual Size Scale

LEATHER CASES . . .

Leather carrying case for clamp-ammeter	$16.50
Leather carrying case for cable, plug, and receptacle	$22.50

(Prices Subject to Change Without Notice)

INDUSTRIAL CIRCUIT TESTER WITH

Model 785 . . . Deluxe Multi-Range-Multi-Purpose-Ultra-Sensitive-Analyzer . . . for Complete Laboratory and Industrial Checking of Electronic and Electrical Circuits.

D-C Sensitivity 20,000 Ohms per Volt . . . Accuracy within 2% on all D-C Ranges except 1000 Volts, 3% . . . 3% on all A-C Ranges at 60 Cycles . . . 5% on all A-C Ranges from 25 through 800 Cycles . . . Scale Length 3.17".

Size 13" x 12½" x 5½" . . . Weight 13½ lbs. . . . Supplied in Oak Carrying Case for Portable Use . . . In Steel Case for Bench Use . . . Convenient Storage Compartment for Accessories, Leads, etc.

GENERAL . . .

The widespread use of electronic devices and sensitive relays in circuits for controlling industrial processes, automatic inspection, signalling and communication, has created a definite need for this sensitive circuit tester.

Its usefulness, however, is by no means confined to sensitive circuit applications. General maintenance work, such as checking motors, lighting circuits, etc. can be accomplished with a minimum expenditure of time. Current and potential leads connected to the instrument at the same time permit instantaneous current and voltage readings.

USES . . .

Aircraft and Truck Power Plants
Aircraft Electrical and Communication Equipment
Automatic Control Equipment
Communication Systems—Telephone, Telegraph, Radio
Electronic Transmitters and Receivers
Electronic Circuits and Equipment
Electrical Products during Manufacture
Inspection of Electrical and Electronic Products
Laboratories—Production Control, Experimental Research, Development Work, School and College courses
Lighting and Power Circuits
Motors—Armature and Field Windings
Maintenance in Electrified Industrial Manufacturing Plants
Naval Ship—Electronic and Electrical Circuits
Network Protectors and Carrier Current Systems
Railroads—Control Circuits, Switching Systems, etc.
Resistances—in all types of circuits
Servicing Electronic and Electrical Equipment
Signal Systems—Police, Fire and Burglar Alarms
Sound Motion Picture Equipment
Spot Welding Equipment
Synthetic Rubber Plants—Electrical Controls
Traffic—Automatic Controls
Transformers—Loads and Windings
Transportation—Street Cars and Buses

RANGES . . .

All ranges required for servicing and testing are instantly available. A wide selection of well-overlapped ranges facilitates measurements in the best portion of the scale.

Voltage		Current			Resistance	
D-C	A-C	D-C	A-C		Full Scale	Center Scale
1,000	750	10 amps	10	amps	30 megohms	250,000 ohms
500	300	1 amp	5	amps	3 megohms	25,000 ohms
200	150	100 ma	1	amp	300,000 ohms	2,500 ohms
50	30	10 ma	.5	amp	30,000 ohms	250 ohms
10	15	1 ma			3,000 ohms	25 ohms
1	5	50 μa				

LIST PRICE

Model 785 in oak carrying case.....$157.50
Model 785 in steel case for bench use..... 127.50

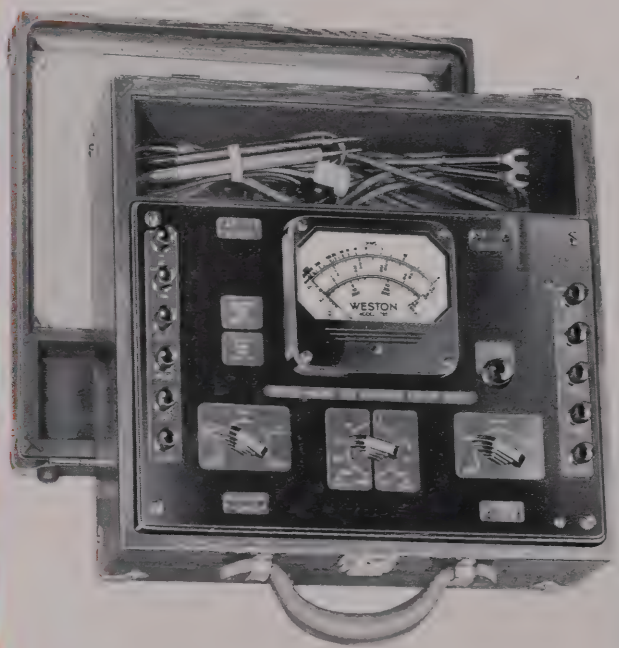

Actual Size Scale of Model 785

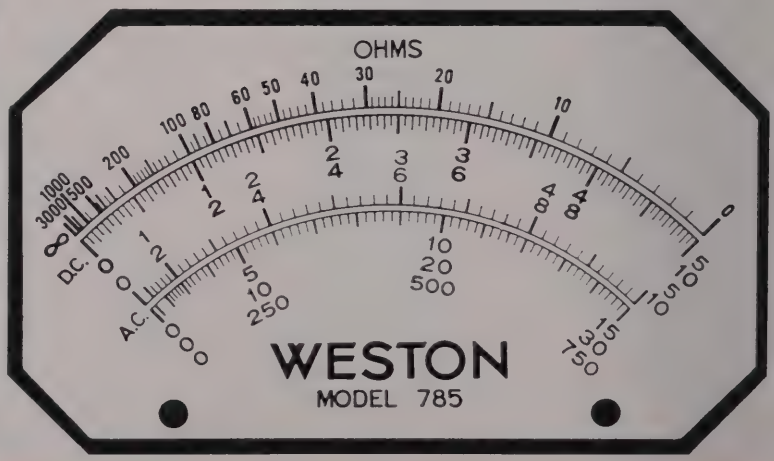

(Prices Subject to Change Without Notice)

27 PRACTICAL SCALE RANGES . . . .

Measures D-C Voltage . . . A-C Voltage . . . D-C Current . . . A-C Current . . . Resistance.

Accessories shown below may be used to extend D-C Voltage Range . . . A-C Current Range . . . The Insulation Tester may be used for Higher Resistance Measurements to 900 Megohms.

MODEL 604 CURRENT TRANSFORMER . . .

Inserted primary type used to increase a-c current range of Model 785. Type 1: Accuracy within 1% on frequencies from 25 to 125 cycles, capacity 2 volt-amperes. Type 2: Accuracy within 1% on frequencies from 50 to 125 cycles, capacity 5 volt-amperes. Ratios include 200:5, 400:5, 500:5.

LIST PRICE—Type 1: 200:5.....$18.00; 400:5, 500:5.....$16.50
Type 2: 200:5.....$30.00; 400:5, 500:5.....$28.50

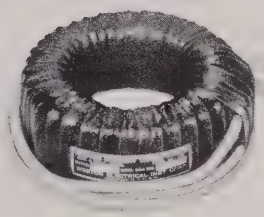

Model 604

MODEL 792 INSULATION TESTER . . .

Insulation and cable resistance measurements up to 900 megohms can be made when Model 792 is used with the Model 785.

This device operates from any 110-130 volt, 50 to 60 cycle line . . . the resistance measurements are made at a test potential of 500 volts, as recommended by the A.I.E.E.

LIST PRICE—Model 792 .....$37.50

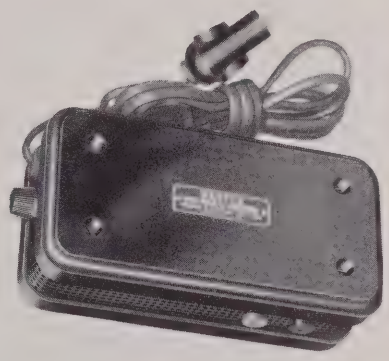

Model 792

MODEL 766 TELEVERTERS . . .

The d-c voltage range of the Model 785 can be extended to 5,000 volts through the use of Model 766 Type 1 Televerter; or to 10,000 volts through the use of the 766 Type 2 Televerter. Particularly useful in television and transmitter maintenance.

The televerter and leads have been designed to afford adequate protection to the operator, and are tested at a breakdown voltage in excess of 11,000 volts a-c.

LIST PRICE—Model 766 Type 1.....$18.00
Model 766 Type 2.....$24.00

100 MV SHUNTS . . .

Higher D-C current ranges can be obtained through the use of external 100 Millivolt shunts.

Ranges To	List Price
200 Amperes	$12.75
250 Amperes	14.00
500 Amperes	24.00
Special Shunt Leads for Model 785	4.50

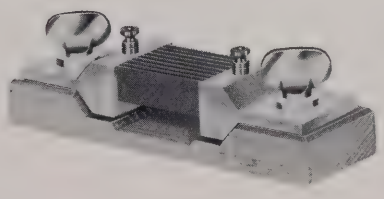

100 MV Shunt

Model 766

(Prices Subject to Change Without Notice)

A-C INDUSTRIAL ANALYZER — SAFE .

Model 639 Type 2 . . . A complete power Analyzer for Industrial Maintenance Men . . . Utility Service Engineers . . . Electrical Contractors . . . and those engaged in General Industrial Testing or Installation Work.

Self-Contained . . . Voltmeter, Wattmeter, Power Factor Meter and Ammeter . . . Only a few simple connections are necessary to place the instrument in circuit . . . Accuracy within 1% Ammeter, Voltmeter, Power Factor Meter—Wattmeter 2% . . . Scale Length 3.5".

Size 18⅞" x 10⅞" x 6⅞" . . . Weight 32 lbs. Contained in Strong Oak Case with Leather Carrying Strap.

USES . . .

Model 639 is ideal for plant maintenance men . . . utility service engineers . . . electrical contractors . . . marine service men . . . and those engaged in general industrial testing or installation work.

It is designed to analyze industrial loads by measuring current, voltage, and power in single and polyphase circuits, as well as power factor in 3-phase, 3-wire, balanced circuits.

CONVENIENCE . . .

Model 639 is self-contained and all interconnections are made within the unit, thereby saving considerable time when power studies are being made . . . Only a few simple connections are necessary to place this instrument in circuit, eliminating the maze of interconnecting wires necessary when individual meters are used . . . Internal switches facilitate rapid measurement of all line currents and voltages . . . Complication of applying multiplying factors to scale readings, when using individual meters and transformers is avoided . . . Fine line scales with knife-edge pointers, and "straight-line" grouping of identical instruments, provides easy readability.

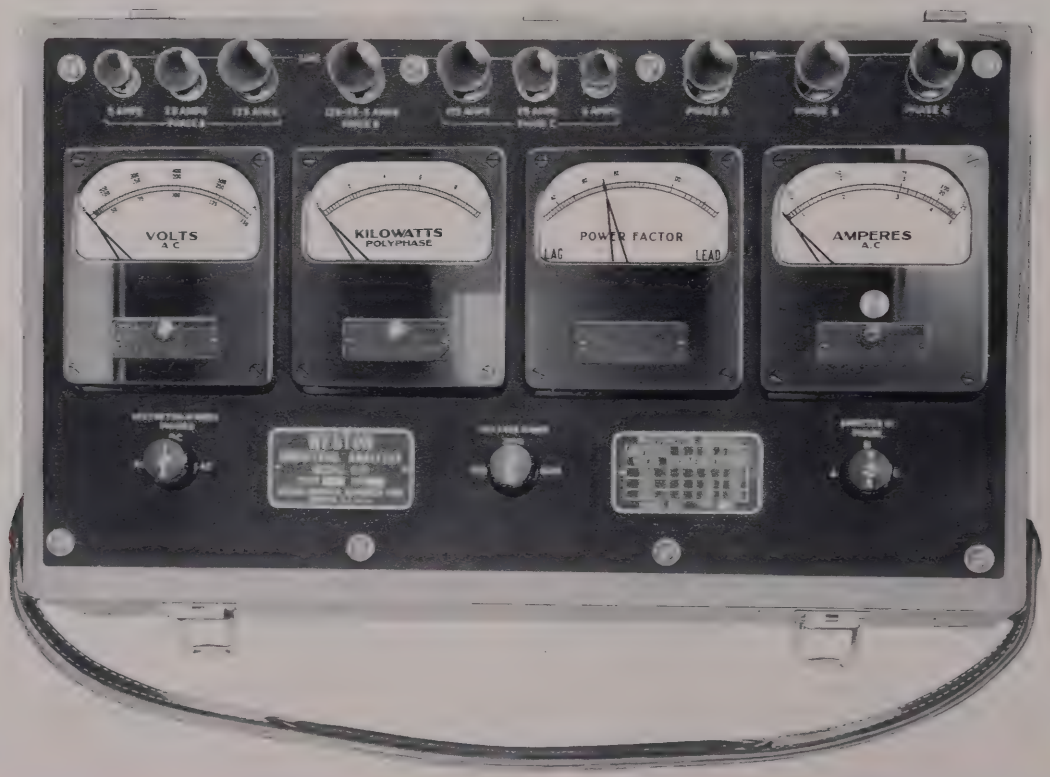

Model 639, Type 2, in Oak Carrying Case

. PORTABLE . . . CONVENIENT . . . ACCURATE

SAFE . . .

Internal connections eliminate possibility of "outage" due to improper connections; or damage to individual meters.

Adequately insulated binding posts and range changing switches provide safety for the operator.

The danger of interference with other equipment is minimized, due to less external wiring.

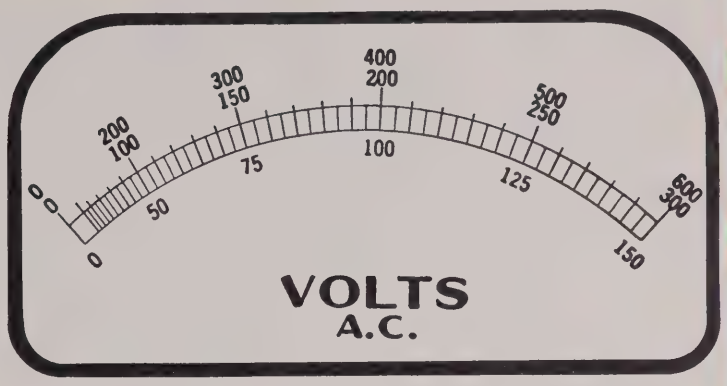

INSTRUMENTS . . .

Four Model 610 instruments (4" x 4½"), a Voltmeter, Ammeter, Wattmeter, and Power Factor Meter are included in its rugged oak carrying case. The Ammeter is equipped with an adjustable pointer stop, which allows the maximum value of starting currents to be quickly determined.

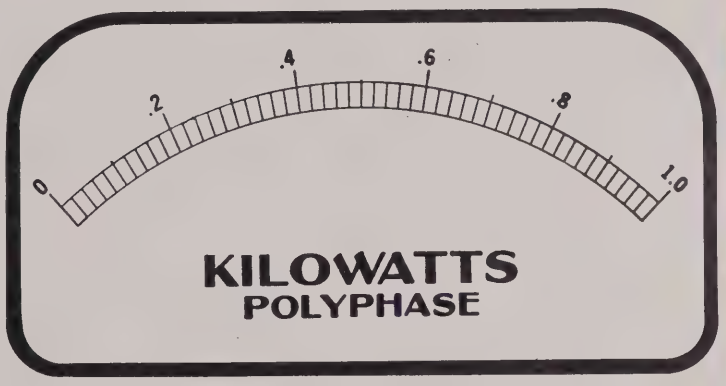

RANGES . . .

Model 639 has self-contained potential ranges of 150/300/600 volts . . . current ranges of 5/25/125 amperes . . . and corresponding Wattmeter ranges.

Current and potential transformers may be used for extending these ranges.

Power factor indications are for 3-phase, 3-wire, balanced systems only . . . .30 lag through unity to .80 lead.

On 220 volt 3-phase circuits, the 5 ampere range will take care of loads to 1 hp on the 2 kw scale . . . on the 25 ampere range, up to 7½ hp on the 10 kw scale . . . on the 125 ampere range up to 40 hp on the 50 kw scale. At 440 or 550 volts the hp and kw ranges are doubled.

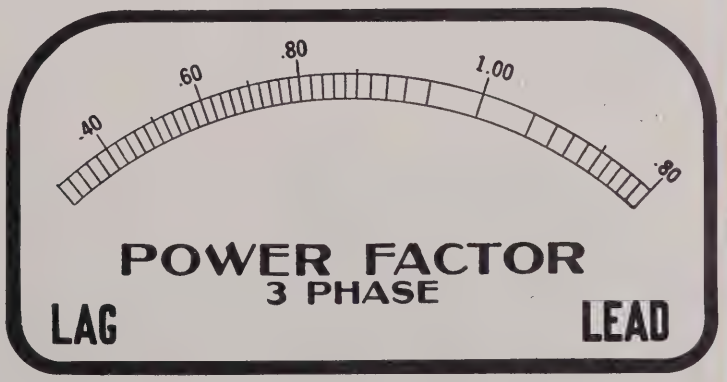

LIST PRICE

Model 639 Type 2.....$630.00

ALL SCALES SHOWN
ACTUAL SIZE

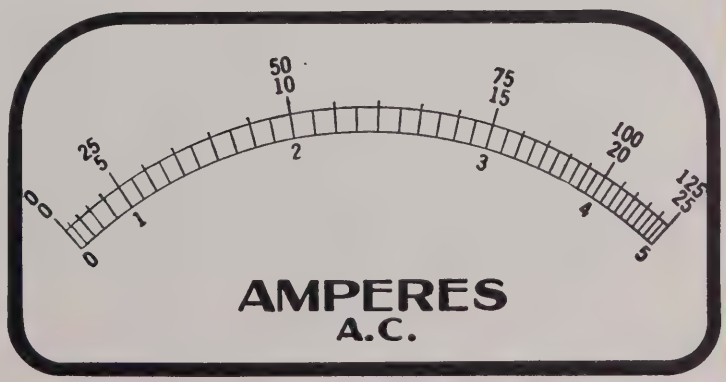

(Prices Subject to Change Without Notice)

PROPORTIONAL MUTUAL CONDUCTANCE TUBECHECKER

Model 798 Type 5 . . . For Industrial, Laboratory and General Testing of Receiving Tubes . . . Voltage Regulator Tubes . . . Low Power Thyratron Tubes.

Mutual Conductance Ranges to 12,000 Micromhos . . . Uses Differential Frequency System . . . Accurate 4½" Meter . . . Scale Length 3.17".

Size 17¾" x 11⅜" x 6⅛" . . . Heavy Gauge Aluminum Case and Panel . . . Removable Cover . . . Storage Compartment for Accessories, etc. . . . Carrying Handle . . . Weight 23 lbs.

NEW TEST CIRCUIT . . .

Standard receiving type tubes are tested in a new circuit known as a differential frequency system, measuring mutual conductance directly in micromhos or in terms of a "Good-Bad" scale. Diode and rectifier type tubes are tested for output at adequate loads to insure proper indication.

A separate section containing a d-c power supply is used for testing voltage regulator tubes. The rated voltage is applied to the tube, the striking voltage observed and the regulating range measured in volts directly on the meter to within 1%. Low current Thyratrons are tested in terms of both conducting and cut-off potentials as well as emission.

A COMPLETE UNIT FOR . . .

Radio Service Shops . . . Plant Production Lines . . . Laboratory . . . Industrial Maintenance . . . Public Address Systems . . . Electronic Field Measurements . . . Theatre Equipment . . . Schools and Colleges . . . Telephone and Telegraph Companies . . . Broadcasting Companies . . . Police Radio . . . Train Communications.

FEATURES . . .

Four plate voltages . . . Three signal voltages . . . Three screen voltages . . . Adjustable bias voltages . . . All independently available . . . Mutual Conductance ranges of 3,000, 6,000 and 12,000 micromhos . . . Tests 4, 5, 6 and 7 prong, octal, loctal, miniature and acorn type tubes, with spare sockets for future requirements . . . Hot neon leakage test between tube elements . . . Tests voltage regulator types 874, VR-75/OA3, OA2, VR105 and VR150 . . . Tests Thyratron types 884, 885, OA4, 6D4, 2A4, 2050, 2051 and similar low power tubes . . . Tubechecker operates on 105-125 volts, 50-60 cycles A-C power source.

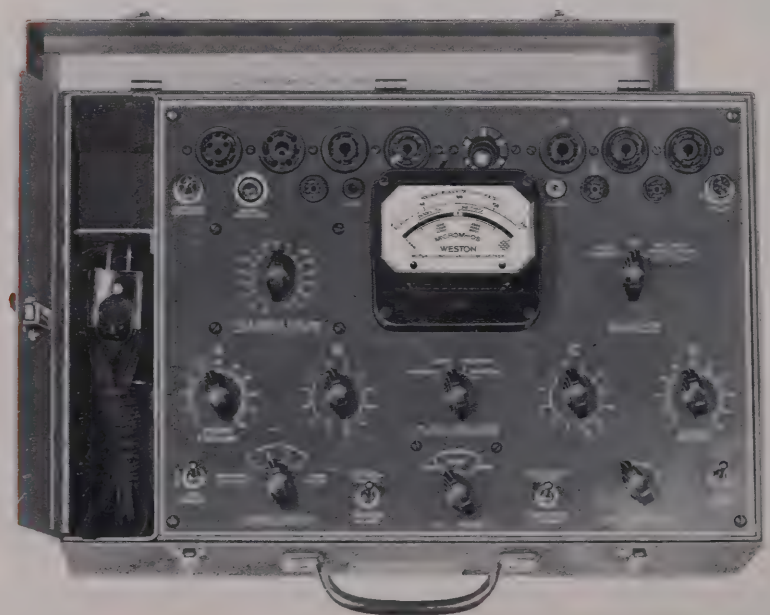

MODEL 798
TYPE 5

SHOWING STORAGE COMPARTMENT FOR ACCESSORIES

LIST PRICE.....$291.50

(Prices Subject to Change Without Notice)

HIGH FREQUENCY ELECTRONIC ANALYZER

Model 769 . . . Designed for Practically all Electronic Measurements . . . FM, AM and Television Service Work . . . High Frequency and Very High Frequency Field Applications . . . General Testing.

Versatile Three-in-One Instrument . . . Volt-Ohm-Milliammeter . . . High Impedance Electronic Volt-Ohmmeter . . . Probe Type Vacuum Tube Voltmeter . . . A-C and D-C to 1200 Volts . . . RF Volts to 120 at Frequencies to 300 Megacycles . . . D-C Current and Resistance to 2000 Megohms.

Size 10" x 13" x 6⅛" . . . Weight 13½ lbs. . . . Solid Oak Carrying Case . . . Removable Cover . . . Sturdy Leather Carrying Handle.

VERSATILE . . . STABLE . . .

A general service unit providing in one instrument the functions of several instruments with no sacrifice in accuracy and considerable gain in convenience. Complete stability attained on all ranges from 3 to 1200 volts and 2000 ohms to 2000 megohms full scale. D-C zero and calibration drift is less than 1% on all ranges, with line voltage variations from 105 to 130 volts, 50/60 cycles a-c. Tubes are replaceable without recalibrating or matching.

Volt-Ohm-Milliammeter

Available as a completely self-contained analyzer with no connection to an a-c line:

D-C VOLTS (10,000 ohms per volt) 3/12/30/120/300/1200.†

A-C VOLTS (1,000 ohms per volt) 3/12/30/120/300/1200.

DECIBELS:—6 to +62 in six ranges.
1 milliwatt, 0 level, 600 ohm line.

D-C CURRENT: 300 microamperes/1.2/6/30/120/600 ma.

RESISTANCE: 2,000/20,000/200,000 ohms full scale*.
20/200/2,000 ohms center scale.

ACCURACY: D-C ±3% A-C ±5%

†For higher ranges to 6,000 volts d-c order:
Model 766, Type 4 Televerter.....$21.00 List

*Ranges from 2 to 2,000 megohms operate electronically.

Electronic Volt-Ohmmeter

Provides measurements of positive or negative d-c potentials and resistance.

D-C VOLTS: ±3/12/30/120/300/1200.

RESISTANCE: 2,000/20,000/200,000 ohms full scale.
2/20/2,000 megohms full scale.
20/200/2,000/20,000/200,000 ohms center scale.
20 megohms center scale.

VOLTMETER RESISTANCE: 15 megohms on all ranges.

ACCURACY: ±4% of full scale on all ranges.

NOTE: Ohmmeter adjuster does not influence setting of electronic zero balance adjustment.

Probe Type Vacuum Tube Voltmeter

Completely isolated from any d-c potential influence. All tubes including RF diode are standard commercial types . . . no specially selected or pre-aged tubes required.

A-C VOLTS: 3/12/30/120.

DECIBELS:—6 to +42 in four ranges.
1 milliwatt, 0 level, 600 ohm line.

ACCURACY: ±5% (direct reading) at 50 cycles to 150 megacycles.
±12% (direct reading) at 150 to 300 megacycles.
±8% (with correction curve) at 150 to 300 megacycles.

LIST PRICE $247.50

RF Probe

Small bakelite and polystyrene probe . . . minimum metallic area . . . for high frequency potential measurements in congested areas.

FREQUENCY RANGE: 50 cycles to 300 megacycles.

INPUT RESISTANCE: 5 megohms.

INPUT CAPACITY: approx. 5 micromicrofarads.

SIZE: 3½" x ¾".

D-C Probe

Contains 3 megohm isolating resistor . . . measures d-c potentials in presence of RF, AF or AC voltages. All electronic d-c ranges operable with standard Weston test leads supplied with instrument.

Model 769

(Prices Subject to Change Without Notice)

SUPERSENSITIVE ANALYZER

Model 779 Type 1 . . . Measures A-C and D-C Voltage . . . D-C Current . . . Resistance . . . Decibels . . . 26 Practical Ranges . . . D-C Sensitivity 20,000 or 1,000 Ohms per Volt . . . Small Size . . . Light Weight.

Accuracy within 2% on D-C to 1,000 Volts . . . 3% on 1,000 Volt D-C Range . . . A-C accuracy within 3% . . . Precision Resistors Throughout . . . A-C Temperature Compensated.

Size 6⅜" x 9⅛" x 4⅞" . . . Weight 6 lbs. . . . Molded Bakelite Panel . . . Rugged Solid Oak Case . . . Removable Cover . . . Carrying Handle.

USES . . .

Analysis of tube circuits, as in electronic receivers, low powered transmitters, and electronic control equipment . . . Potentials and current in television equipment and wired communication systems . . . Power level in Decibels in audio equipment, P.A., telephone and speech lines . . . Cathode ray equipment . . . Maintenance of electronic control and alarm systems . . . Production adjustment and testing of sensitive electronic devices and communication equipment . . . Measurement of plate voltage and current on amateur transmitters, as required by F.C.C. . . . Diode currents in AVC circuits and AFC current . . . Leakage of condensers . . . Resistance of all types of circuits.

Model 779, Type 1

ACCESSORIES . . .

D-C voltage range can be extended to 5,000 or 10,000 volts through the use of Model 766 Type 1 or Type 2 Televerter, described on page 5.

RANGES . . .

Volts D-C	Volts A-C	Current D-C only	Decibels	Ohms
2.5	2.5	.1 ma.	—14 to + 2	0-3,000
10.	10.	1. ma.	— 2 to +14	0-30,000
50.	50.	10. ma.	+12 to +28	0-300,000
250.	250.	50. ma.	+26 to +42	0-30 Meg
1000.	1000.	250. ma.	+38 to +54	
		1. amp.	6 milliwatts, 500 ohms zero level	
		10. amps.		

LIST PRICE

Model 779 Type 1 (including test leads).....$127.50

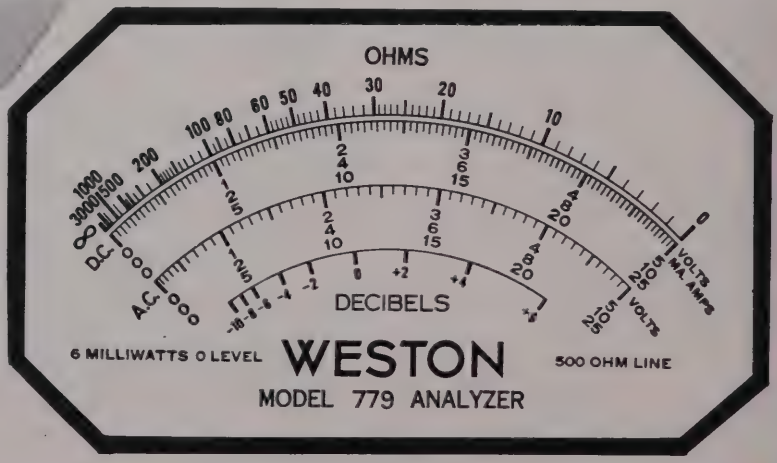

ACTUAL SIZE SCALE OF MODEL 779

(Prices Subject to Change Without Notice)

LIGHT MEASURING INSTRUMENTS

Invaluable for Factory, Home or Office Lighting Surveys . . . Available as a Sight Meter . . . an Industrial Foot-Candle Meter . . . and an Illumination Meter.

Direct reading in the **Viscor filter type for all kinds of commercial lighting.

SIGHT METER—MODEL 703 . . .

A self-contained pocket size meter for checking the amount of light at work positions. Ideal tool for selling lighting and lighting equipment. The scale is calibrated in various "seeing" tasks as well as 0 to 75 Foot-Candles.....Scale Length 1.57"
Dimensions 4⅝" x 2⅝" x 1 5/16".....Approx. Weight 10 ounces

Ranges and List Prices

Model 703 Type 3 (unfiltered) 0 to 75 Foot-Candles	$27.00
Model 703 Type 6, (with **Viscor Filter) 0 to 75 Foot-Candles	39.00
Multiplier disc (extending range to 750 Foot-Candles)	1.25
Leather carrying case	2.75

Model 703

INDUSTRIAL FOOT-CANDLE METER—MODEL 614 . . .

For industrial lighting surveys and measurements requiring a wide range of light values.....Scale length 2.36"

It has 3 ranges controlled by a toggle switch and is calibrated in Foot-Candles.

The *Photronic cell or light target is hinged so that it can be tilted at an angle to facilitate measurements.

It is entirely self-contained . . . has black bakelite case with hinged cover . . . and a leather carrying strap.

Dimensions: 7⅜" x 3⅜" x 2¼".....Approx. Weight: 1 lb. 13 oz.

Ranges and List Price

Model 614, 0-60/120/600 Foot-Candles with **Viscor Filter.....$75.00

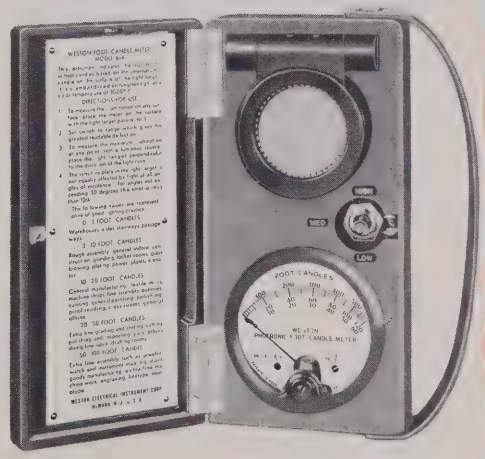

Model 614

ILLUMINATION METER—MODEL 756 . . .

A broad range precision instrument ideal for research or routine work or as a master instrument for checking other light measuring devices. All types of commercial lighting can be read directly without correction factors.

The light target, housing two **Viscor filter equipped *Photronic Cells, connects to the instrument with a flexible 6 foot extension cable.

Range selection is made by a convenient range changing switch. The meter is housed in a sturdy leather carrying case with a compartment for the light target.

Ranges and List Prices

Model 756, 0-20/50/500 Foot-Candles (**Viscor type) including leather carrying case.....$269.00

Model 756, 6/12/60/120/600 Foot-Candles (**Viscor type) including leather carrying case.....$301.50

Model 756

***PHOTRONIC . . . **VISCOR—registered trademarks**

(Prices Subject to Change Without Notice)

MATCHED A-C AND D-C PORTABLE

Model 430 D-C, together with Models 432, 433 and 455 A-C Instruments, comprise a Matched Set of Portable Test Equipment designed for Highly Accurate General Test Work . . . Available as Voltmeters . . . Ammeters . . . D-C and Single Phase A-C Wattmeters . . . A-C and D-C Voltmeters.

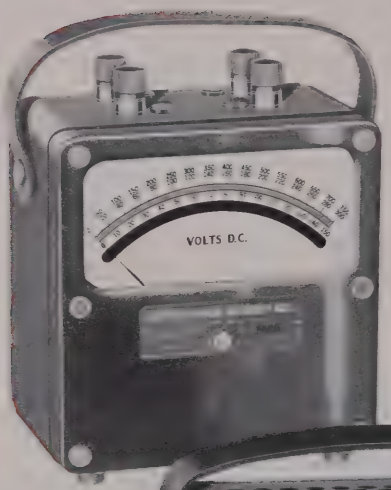

Model 430

Model 432

Model 433

Model 455

MODEL 430 D-C INSTRUMENTS

Scale Length 4.04" . . . Accuracy within ½ of 1% . . . Permanent Magnet Moving Coil Type

Size 5-1/16" x 6-1/32" x 3½" . . . Weight 3½ lbs. . . . Hand Calibrated Mirror Scales . . . Contained in Molded Bakelite Case with Leather Carrying Strap.

D-C VOLTMETERS—MODEL 430 . . .

Range	List Price 1,000 Ohms Per Volt	List Price 5,000 Ohms Per Volt
3 . . . 15 . . . 50	$60.00	$75.00
300/150/3	78.00	93.00
750/300/150	84.75	99.75

D-C AMMETERS—MODEL 430 . . .

Range	List Price
1 . . . 1.5 . . . 3 . . . 5	$63.00
30/15/3	78.00
50/20/5	78.00

Self-contained up to 50 amperes inclusive, but can be supplied with external 50 mv shunts and 5 ft. leads.

(Prices Subject to Change Without Notice)

TEST INSTRUMENTS . . . .

D-C MILLIAMMETERS—MODEL 430 . . .

Range	List Price
15 . . . 150	$58.50
15/1.5/.15	82.50
1500/150/15	78.00

Single range Milliammeters with ranges above 30 ma are shunted and have a drop of 50 mv ± 5%.

D-C MICROAMMETERS—MODEL 430 . . .

	High Resistance		Low Resistance	
Range	Approx. Res. Ohms	List Price	Approx. Res. Ohms	List Price
30	2400	$82.50	150	$90.00
100	1650	75.00	45	82.50
200	560	67.50	10	75.00

MODEL 433 A-C INSTRUMENTS

Scale Length 4.04" . . . Accuracy within ¾ of 1% . . . Movable Iron Type . . . Shielded from External Magnetic Fields.

Size 5-1/16" x 6-1/32" x 3½" . . . Weight 2½ lbs. . . . Hand Calibrated Mirror Scales . . . Contained in Molded Bakelite Case with Leather Carrying Strap.

A-C VOLTMETERS—MODEL 433 . . .

Made with single, double and triple ranges. For use on frequencies from 25 to 125 cycles. Voltmeters are available at a surcharge, compensated for higher frequencies . . . Correspondence invited.

Range	List Price
10 . . . 30 . . . 50 . . . 75	$54.00
10/5 . . . 20/10 . . . 30/15	61.50
450/300/150	83.25
600/300/150	85.50
750/300/150	87.75

A-C MILLIAMMETERS—MODEL 433 . . .

Made in single and double ranges only, for use on frequencies from 25 to 500 cycles.

Higher frequency spans from 25 to 1,000 cycles or 25 to 2,500 cycles can be provided subject to surcharges. Correspondence invited.

Range	List Price
15 . . . 30 . . . 75	$52.50
500	52.50
300/150	67.50

A-C AMMETERS—MODEL 433 . . .

Made in single, double and triple ranges for use on frequencies from 25 to 500 cycles. All instruments have two binding posts; double and triple range instruments are provided with a range selector switch.

Single and double range instruments can, at a surcharge, be adjusted to cover a frequency span from 25 to 1,000 cycles; or 25 to 2,500 cycles, within the guaranteed accuracy. Correspondence is invited.

Range	List Price
1 . . . 1.5 . . . 2 . . . 3	$ 52.50
15 . . . 25 . . . 30	58.50
2/1 . . . 5/2.5 . . . 10/5	67.50
3/1.5/0.75 . . . 5/2.5/1 . . . 10/5/1	112.50
20/5/2 . . . 30/7.5/3 . . . 50/20/5	118.50

MODEL 432

D-C AND SINGLE PHASE A-C WATTMETERS

Double voltage and single or double current ranges, self-contained up to 300 volts and 50 amperes, frequencies from 25 to 125 cycles. Adjustments can be made, at a surcharge, to cover a frequency span up to 1,000 cycles.

Electrodynamometer Type

Accuracy ½ of 1% ..... Scale Length 4.04"
Size $6\frac{19}{32}$" x 5¼" x 3½" ..... Weight 3¼ lbs.

Normal Volts	Normal Amps	List Price
75/150	1	$101.25
	Double Current Ranges	
300/150	5/2.5	122.25

LEATHER CASES . . .

Leather carrying cases for voltmeters, ammeters, milliammeters, microammeters or Model 432 wattmeters $13.50

Model 433 (extended instrument case) $18.00

MODEL 455

A-C AND D-C VOLTMETERS

Used on D-C, and A-C of frequencies from 25 to 125 cycles. Single and double range instruments can be provided for frequencies of 25 to 1,000 cycles, higher frequencies up to 2,500 cycles are available at a surcharge. Supplied in most ranges listed for Model 433 voltmeter at a cost $45.00 higher for equivalent range. Similar in size and appearance to Model 433 voltmeter.

Electrodynamometer Type

Accuracy ½ of 1% ..... Scale Length 4.04"

Leather Carrying Case

(Prices Subject to Change Without Notice)

LEAKAGE RESISTANCE TESTER

Model 799 . . . Ideal for Leakage Measurements on Equipment . . . Motors . . . Electronic and Radio Components . . . Insulating Materials, etc. . . . Small . . . Compact . . . One-Hand Operation.

Range 0.1 to 1,000,000,000 Ohms . . . Scale Length 2.375" . . . Logarithmic Scale . . . Low Test Potential—Less than 50 Volts . . . Accurate within 1/8" of Scale Length . . . Average Battery Life—One Year under Average Conditions.

Size 3-3/16" x 5¼" x 5" . . . Weight 3.8 lbs. . . . Supplied Complete with Test Leads . . . Tube . . . Batteries . . . Leather Carrying Strap . . . Solid Oak Case (as illustrated below).

Model 799

USES . . .

- Model 799 is invaluable for checking receiver and amplifier components, such as interstage coupling condensers where higher resistance readings are required and lower potentials must be used than those supplied in the conventional megger. Electronic timers, pulse modulating equipment, vacuum tube controlled machinery, and similar devices incorporating condensers subject to the same test requirements.
- Ideal for measuring insulation properties of plastics, paints, varnishes, lacquers, etc.
- Leakage resistance caused by moisture absorption.
- Leakage resistance in built-up equipment, such as motors, control equipment generally, electronic equipment, can be measured without destructive breakdown.
- Insulation leakage of machinery and cables.
- Conductance of insulating materials, such as, safety shoes, floor coverings, etc.
- Testing of capacitor insulation.
- Testing of paper and mica condensers.

LOW MAINTENANCE COSTS . . .

- Long life, low cost tube, average 1,500 hours of continuous operation.
- Average plate battery life approximately 300 working hours, low renewal cost.
- Life expectancy of filament battery about 85 working hours, replacement cost negligible.

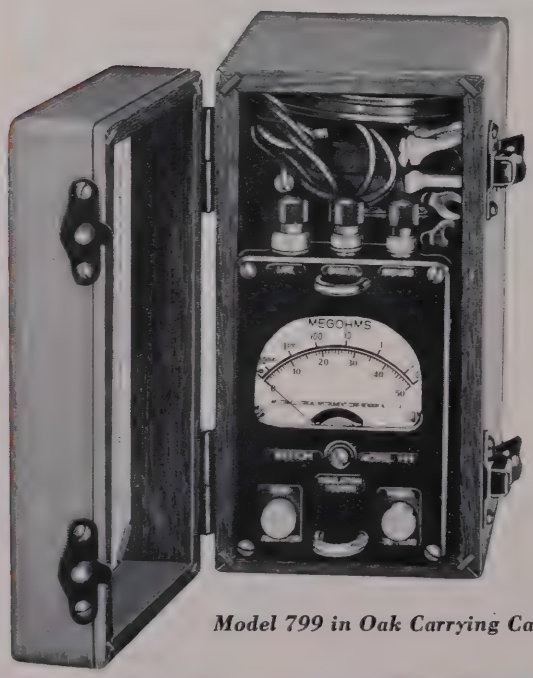

Model 799 in Oak Carrying Case

EXTREME SENSITIVITY . . .

- Resistance leakage measurements may be made with practically no polarization effects.
- Provision for immediate checking of cable or capacitor, where effective capacity is present.
- For instantaneous charging of the cable or capacitor, connections can be made between the "ground" terminal, and the "shield" terminal first, then transferred to the "ground" and "line" terminals for immediate readings; thereby eliminating the time necessary for the circuit under measurement to become charged.

LIST PRICE—Model 799 (including leads, tube, batteries, oak carrying case).....$75.00

(Prices Subject to Change Without Notice)

POCKET SIZE INSTRUMENTS

For a Wide Variety of Maintenance . . . Production . . . and Inspection Applications, where Portability and Reasonable Accuracy are Required.

Available as Volt-Ohm-Milliammeters . . . Volt-Ohmmeters . . . Ohmmeters and Power Level Meters.

OHMMETERS—MODEL 689 . . .

A convenient pocket-sized instrument for the resistance and continuity method of checking circuits. The indicating instrument is a 3¼" meter. A self-contained battery provides the necessary potentials for resistance readings.

Type 1E has a double range of 0-5,000 and 0-50,000 ohms . . . center scale 125 and 1,250 ohms.

Type 1F has a double range of 0-10 and 0-1,000 ohms, for the accurate measurement of low resistance values. This type is widely used for production and maintenance testing of armature and field resistance of small motors—relay and coil testing—transformer winding tests—and other similar applications.

Accuracy within 2%	Scale Length 2.36"
Dimensions: 5" x 2⅞" x 1⅞"	Approx. Weight: 1 lb.
Model 689—1E (Including Test Leads)	$27.00
Model 689—1F (Including Test Leads)	25.50
Leather carrying case	11.00

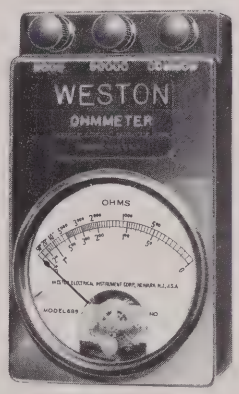

Model 689

VOLT-OHMMETER—MODEL 564-3C . . .

Model 564 Type 3C has a broad selection of resistance and D-C voltage ranges, available from pin jacks molded in the bakelite panel. A Toggle switch is used to connect the meter in circuit.

All voltage ranges have a sensitivity of 1,000 ohms per volt. The indicating instrument is a 3¼" type. Self-contained battery provides the necessary potential for the ohm ranges.

Accuracy: Within 2%	Scale Length: 2.36"
Dim.: 4-33/64" x 3-45/64" x 2-9/16"	Approx. Wt.: 1¾ lbs.

Ranges and List Prices

D-C Volts	Ohms: Full Scale	Ohms: Center Scale
600	1,000,000	35,000
300	100,000	3,500
30	10,000	350
3	1,000	35

LIST PRICE—Model 564 Type 3C (including test leads) $54.00

Leather Carrying Case 9.00

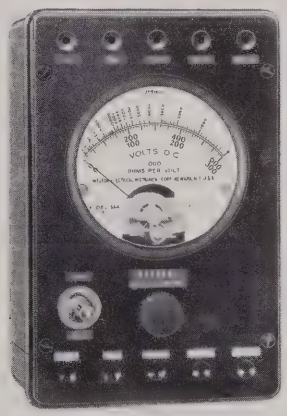

Model 564-3C

VOLT-OHM-MILLIAMMETER—MODEL 697 . . .

Model 697 combines a selection of A-C and D-C voltage, direct current and resistance ranges. All A-C and D-C ranges have a sensitivity of 1,000 ohms per volt.

Accuracy: Within 2% on D-C; 5% on A-C	Scale Length: 2.36"
Dimensions: 5-9/16" x 3¾" x 3-9/16"	Approx. Weight: 1¾ lbs.

Ranges and List Prices

Volts: D-C	Volts: A-C	Milliamperes: D-C	Ohms: Full Scale	Ohms: Center Scale
750	750	75	500,000	3,500
150	150	7.5	5,000	35
15	15			
7.5	7.5			

LIST PRICE—Model 697 (including test leads) $49.50

Leather Carrying Case 9.00

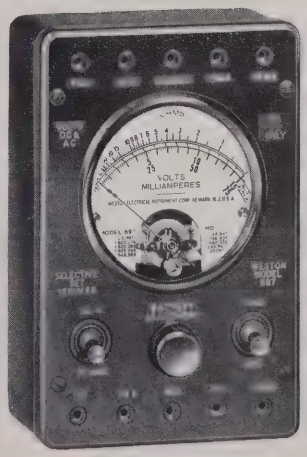

Model 697

(Prices Subject to Change Without Notice)

MINIATURE PORTABLE A-C AND D-C INSTRUMENTS

For General Testing . . . Laboratory Work . . .
All-Around A-C and D-C Testing where Accuracy of a Precision Portable is not Required.

Dependable . . . Light in Weight . . . Small in Size . . . Contained in Rugged Cases . . . Available in Single and Multi-Ranges.

MODEL 528 A-C INSTRUMENTS . . .

For research and educational laboratories and general testing purposes. Contained in black bakelite case.

Accuracy 2%.....Scale 2.03"
Dimensions: 3-27/32" x 3-5/32" x 2⅛"
Weight: 11 ounces

A-C VOLTMETERS—MODEL 528 . . .

Double and triple range combinations, self-contained, supplied with 30 inch test leads pin tipped for triple range instruments. Frequencies, 25 to 125 cycles.

Range	List Price
150/15	$21.75
300/150	24.00
600/150	28.50

Model 528

Model 489

A-C AMMETERS—MODEL 528 . . .

Range	List Price
1 . . . 3 . . . 5 . . . 10	$18.00
30 . . . 50	18.00
15/3 . . . 30/3	24.00
15/5 . . . 30/5	28.50

Frequencies from 25 to 500 cycles. Higher ranges obtained by using Model 539 Current Transformer in conjunction with a 1 ampere instrument.

A-C MILLIAMMETERS—MODEL 528 . . .

Range	List Price
15	$18.00
50	18.00
100	18.00
500	18.00

For frequencies from 25 to 500 cycles.

MODEL 489 D-C INSTRUMENTS . . .

Rugged, all-around instrument for checking where accuracy of a precision portable is not required. Enclosed in black molded bakelite case.

Accuracy 2%.....Scale 2.36"
Dimensions: 3-27/32" x 3-5/32" x 1-29/32"
Weight: 11 ounces

D-C VOLTMETERS—MODEL 489 . . .

Double and triple range combinations having sensitivities of 125 and 1,000 ohms per volt. Supplied with 48 inch test leads pin tipped for triple range instruments.

125 Ohms Per Volt		1,000 Ohms Per Volt	
Range	List Price	Range	List Price
150/7.5	$22.50	200/8	$24.75
200/8	23.25	250/50	25.50
		150/7.5/3	26.25
		300/7.5/3	28.50
		750/250/10	35.25

D-C AMMETERS—MODEL 489 . . .

Range	List Price
1 . . . 10 . . . 30	$19.50
10/1 . . . 15/3 . . . 30/3	21.75

D-C MILLIAMMETERS—MODEL 489 . . .

Range	Approx. Res. Ohms	List Price
150/15	0.7/4.1	$20.25
150/30	0.7/2.6	20.25

(Prices Subject to Change Without Notice)

LARGE PORTABLE A-C AND D-C INSTRUMENTS

For General Industrial Testing . . . Field Use . . . and Laboratory Applications, where High Accuracy and Ruggedness are Required.

Accuracy within ½ of 1% . . . Scale Length 5.18" . . . Hand Calibrated Mirror Scales . . . Available as Single—Double—Triple Range Voltmeters . . . Ammeters and Milliammeters.

MODEL 155 A-C INSTRUMENTS . . .

Furnished in dust-proof polished black walnut cases without covers, convenient leather carrying handle.

Voltmeters, Ammeters and Milliammeters to 300 Volts

Dimensions: 7" x 7⅛" x 3¼".....Weight 4 lbs.

Voltmeters Above 300 Volts

Dimensions: 7¾" x 8¾" x 4".....Weight 5 lbs.

A-C VOLTMETERS—MODEL 155 . . .

For frequencies from 25 to 125 cycles. Correspondence invited for frequencies up to 1,000 or 2,500 cycles.

Range	List Price
30 . . . 50	$ 76.50
300/150	87.00
600/300/150	106.50

Six Range—For use on 60 cycles

Dimensions: 7¾" x 8¾" x 4".....Weight 8 lbs.
750/300/150/75/15/3 Volts.....List Price $176.25

A-C AMMETERS—MODEL 155 . . .

Used on frequencies from 25 to 500 cycles. Self-contained up to and including 500 amperes.

Range	List Price
1 . . . 2 . . . 3 . . . 5 . . . 10	$75.00
100	82.50
10/5	97.50

A-C MILLIAMMETERS—MODEL 155 . . .

Range	List Price
50 . . . 75 . . . 150	$75.00
500 . . . 750	75.00
300/150	97.50

MODEL 45 D-C INSTRUMENTS . . .

Contained in lacquer finished oak case with hinged cover and carrying handle.

Dimensions: 8" x 8" x 4¾".....Weight 9.9 lbs.

D-C VOLTMETERS—MODEL 45 . . .

Made in two sensitivities, 100 and 1,000 ohms per volt. Other sensitivities supplied on special order.

Range	List Price 100 Ohms per Volt	List Price 1,000 Ohms per Volt
1.5 . . . 3 . . . 5 . . . 15	$ 87.00	$ 94.50
150/15	95.25	102.75
150/15/3	102.75	110.25

D-C AMMETERS—MODEL 45 . . .

Self-contained up to and including 25 amperes, external 50 mv shunts and 5 ft. leads supplied above 25 amperes.

Range	List Price
1.5 . . . 3 . . . 5 . . . 10	$ 97.50
300	101.25
750	111.75

D-C MILLIAMMETERS—MODEL 45 . . .

Range	Approx. Res. Ohms	List Price
1.5	360	$85.50
100	0.50	85.50
750	0.07	85.50

Model 155

Model 45

(Prices Subject to Change Without Notice)

MINIATURE PRECISION PORTABLE D-C INSTRUMENTS

Model 280 . . . Accurate and Dependable . . . Designed as Voltmeters, Millivoltmeters, Ammeters, Milliammeters and Volt-Ammeters . . . For use wherever Precision D-C Testing is Required.

Self-Contained . . . Scale Length 2.76" . . . Accuracy within 1% . . . Permanent Magnet Moving Coil Type . . . Shielded from External Magnetic Fields.

Size 4-2/5" x 4-3/5" x 1½" . . . Weight 1.1 lbs. . . . Hand Calibrated Scales . . . Knife Edged Pointers and Mirrors to Eliminate Parallax Errors . . . Leather Carrying Case.

D-C VOLTMETERS—MODEL 280 . . .

Resistance of Approximately 100 ohms per volt.

Range	List Price
3	$34.50
5	34.50
10	34.50
30	34.50
75	34.50
150	35.25
†500/50	66.75
30/15/3	42.00
50/25/5	42.00
100/50/5	42.00
150/15/3	42.75
150/75/3	42.75

†Push button for low range. Sensitivity 500 ohms per volt.

D-C AMMETERS—MODEL 280 . . .

Range	List Price
1	$33.00
3	33.00
5	33.00
10	33.00
15	33.00
*50	46.50
15/3/1.5	40.50

*Provided with external shunt having a drop of 50 mv.

D-C MILLIVOLTMETERS—MODEL 280 . . .

Range	List Price
50	$36.00
100	36.00
150	33.00
250	33.00
500	33.00
750	33.00

Model 280

D-C MILLIAMMETERS—MODEL 280 . . .

Range	Approx. Res.	List Price
1.5	27	$33.00
5	10.6	33.00
25	1.2	33.00
50	2.0	33.00
100	1.00	33.00
30/15/3	------	40.50
600/120/30	------	40.50

Milliammeters with ranges above 30 milliamperes are shunted and have a drop of approximately 100 mv.

D-C VOLT-AMMETERS—MODEL 280 . . .

Ranges		
Volts	Amperes	List Price
30/3/1.5	30/3/1.5	$54.00
30/15/3	15/3/0.15	54.00
*60/30/6	6/0.6/0.03	54.00
150/15/1.5	15/1.5/0.15	54.75
150/15/3	30/3/1.5	54.75
150/60/3	30/0.6/0.06	54.75
**30/3/.05	300/30/3	76.50

*Adapted particularly for railway signal and automatic train control testing.

**Recommended for testing automotive starting, lighting, ignition and battery charging equipment.

(Prices Subject to Change Without Notice)

CURRENT TRANSFORMERS

For use with A-C Instruments where Higher Ranges are Required . . . Switchboard, Miniature and Standard Type Transformers are Available.

Four Self-Contained Primary Ranges are brought out to a Switch or to Binding Posts. A Short Circuiting Switch is provided for the Secondary Winding to Prevent Damage to the Transformer if the Secondary Circuit should be opened while Current is on the Primary.

MINIATURE CURRENT TRANSFORMER—MODEL 539 . . .

Designed for use with Model 433 and 528 Ammeters, with accuracy within 1% in the 25 to 125 cycle range. May also be used with Model 155 for work requiring medium accuracy, but is not suitable for accurate work with wattmeters.

Convenient switch permits selection of any one of four self-contained primary ranges of 2, 5, 10 and 20 amperes. Ranges of 200, 100 and 50 amperes are available when conductor is passed through the transformer one, two or four times respectively.

Completely self-contained . . . Furnished in a sturdy red and black bakelite case.

Dimensions: 5¼" x 4⅛" x 1⅞"; Core Opening: 1½" ..... Approx. Weight 2⅝ lbs.

Primary Ranges and Price

2, 5, 10 and 20 Amperes, Self-contained Primary,
Maximum of 200 Amperes Inserted Primary $61.50

CURRENT TRANSFORMER—MODEL 461, TYPES 1 AND 2 . . .

These Multi-range Current Transformers, operating in frequencies of 25 to 125 cycles, cover primary current ranges from 10 to 800 amperes inclusive. Selection of four self-contained primary ranges of 10, 20, 50 and 100 amperes is available through binding posts on the case top. A primary range of 800 amperes results with one turn of the primary through the core opening; with two turns, 400 amperes; and with four turns, 200 amperes, etc. The secondary current rating at normal primary current is 5 amperes.

Line potentials up to 2,500 volts are permissible, but where potentials between 2,500 and 16,500 volts are to be encountered, the use of a special High Voltage Insulating Sleeve is recommended.

TYPE 1 has a normal secondary capacity of 5 volt-amperes, with a ratio accuracy sufficiently high for use with Model 155 and 433 Ammeters, without correction curves. Model 329 and 432 Wattmeters can be used without correction curves if the power factor of the load is near unity. Supplied in black bakelite case with leather carrying strap.

Dimensions: 6⅝" x 7⅞" x 2¾" Core Opening: 2⅛"
Weight: 7¼ lbs.

TYPE 2 has a normal secondary capacity of 15 volt-amperes and offers greater accuracy. It can be used with Model 329 and 432 Wattmeters without correction curves at any load power factor. Supplied in tan or natural color canvas filler bakelite case with leather carrying strap.

Dimensions: 6⅝" x 7⅞" x 2¾" Core Opening: 2⅛"
Weight: 8½ lbs.

Primary Ranges and Prices

10/20/50/100 Amperes Self-contained Primary,
Maximum of 800 Amperes Inserted Primary,

Type 1 ..... $ 97.50
Type 2 ..... 131.25

Alternate Range to 1,000 Amperes

10/25/50/100 Amperes Self-contained Primary,
Maximum of 1,000 Amperes Inserted Primary,

Type 1 ..... $ 97.50

Model 539

Model 461

(Prices Subject to Change Without Notice)

Specify

WESTON

for all your

PANEL & SWITCHBOARD INSTRUMENTS

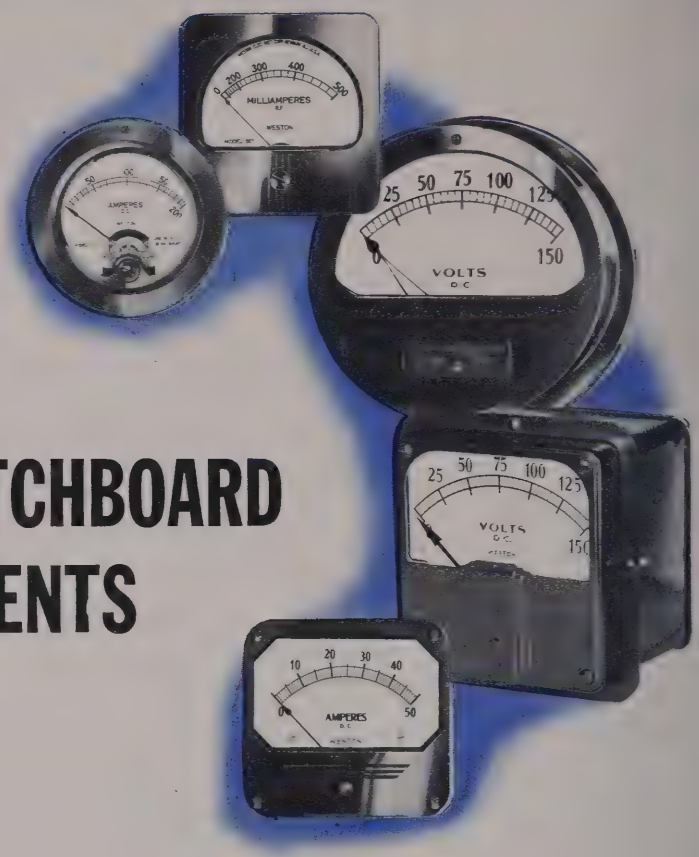

+GraybaR QUALITY SINCE 1869 + REG. U.S. PAT. OFF.

Distributed by

+GraybaR ELECTRIC COMPANY

"Offices in Nearly 100 Principal Cities"

Weston ENGINEERING NOTES

VOLUME 13 DECEMBER 1959 NUMBER 2

In This Issue

Calibrating and Standardizing Procedures

Weston Model 610 D-C Summation Meter

John Parker, Editor

W. A. Graham, Technical Editor

Copyright 1959, Weston Instruments

DAYSTROM, INCORPORATED
Daystrom-Weston Sales Division
614 Frelinghuysen Avenue,
Newark 12, N. J., U. S. A.

CALIBRATING AND STANDARDIZING PROCEDURES

The following address was given on September 17, by Dr. Robert C. Langford, Chief Engineer of Weston Instruments, Division of Daystrom, Inc., to a group of leading authorities in the instrumentation field. The address was in connection with a seminar held discussing the state of calibration equipment and instrumentation procedures.

PREVIOUS speakers in the other discussions have covered with you the principles of measuring instruments and, further, the selection of instruments. At this point, then, I would like to assume that you are now the proud possessor of several instruments and are interested in making certain that the principles of operation are fully substantiated. Basically, the job of calibrating and standardizing is to make certain that the inherent accuracy and stability built into the instruments is fully maintained and any departure from the initial conditions carefully noted. This may occur when repairing an instrument or doing regular preventive maintenance. At this point it is not without interest to note that the actual terms "calibrating" and "standardizing" do have an interesting but important difference between them. In the general sense of the word calibrating an instrument implies the idea of starting with a mechanism and a blank scale and determining where to put the cardinal points and lines. Standardizing, on the other hand, implies the idea of checking the calibration of an already established instrument. To my knowledge these definitions have not yet been finalized in any specific form by ASA etc., but they are in use by a reasonably large number of major companies today.

When you stand and look at this problem, perhaps, the first important question that must be answered is how accurate is accurate, and it is for this reason that the story starts a rather long way back. In the United States, the National Bureau of Standards; in Germany, the Bundesanstalt; and in the United Kingdom, the National Physical Laboratory are each charged by law with the fundamental determination of the ampere, volt, ohm and other electrical parameters. It is the job of these national institutions to make absolute determinations that are independent of physical entities. It is also their task to provide themselves with working standards which they check periodically back to fundamental absolute determinations. To help complete the chain they supply a service for the comparison of industries working standards against their own. It will be appreciated that with the use of Ohm's law, it is only necessary to obtain any two standard quantities of the ampere, volt or ohm to obtain all three. Further, using the theory of dimensions, if units obtained of say permeability are included, all other phenomena in the electromagnetic spectrum may be determined. The NBS has chosen in the electrical field to standardize on the use of standard resistors and Weston standard cells as their two necessary working primary standards for ohms and volts respectively. This practice, of course, has been followed throughout industry and we are no exception to the rule in having our own primary standards of standard resistors and Weston standard cells. For many years Weston Instruments, Division of Daystrom, Inc.,

Slide 1—Main bank of primary standard resistors.

Slide 4—Standardizing Laboratory.

has been in the closest contact with the national institutions such as the Bureau of Standards in all forms of standardizing activity, two of our previous speakers Messrs. Lamb and Miller having been elected fellows of the AIEE for their contributions to such activities. Indeed it was something of a compliment that, when the bureau decided to set up their new laboratories at Boulder, Colorado, we were consulted in several of their major decisions on what types of service to set up.

Our first slide shows a list of standard resistors. This picture describes the main bank of our primary standards going from .00001 ohm to 100,000 ohms. Close inspection of this slide will reveal that there is nothing very artistic about these items; indeed they look almost battered. As a matter of fact, some of our young engineers on starting business straight from college have been known to look somewhat down their noses at these rather insignificant looking items. However, they are among our greatest treasures. Slide No. 2 shows some of the

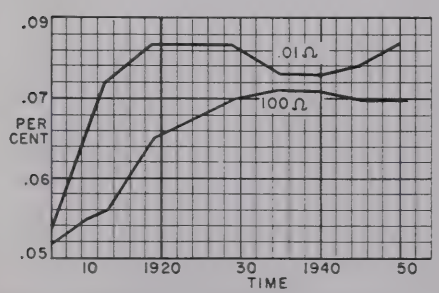

Slide 2—History of changes in standard resistors.

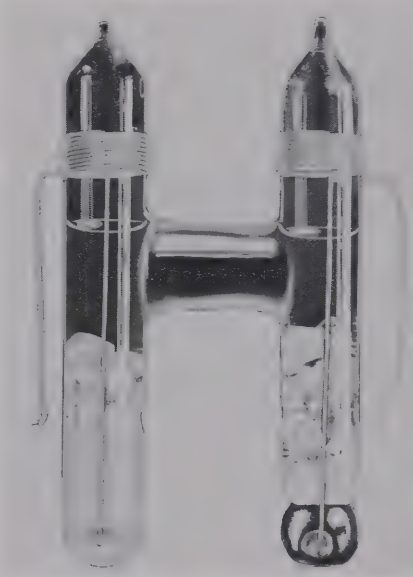

Slide 3—Saturated form Weston Standard Cell.

variations in a .01 ohm and 100-ohm unit that was purchased from Wolff in 1893 and the other made by Weston in 1907. The Wolff unit was shipped into this country carrying the seal of the Reichsanstalt (the forerunner of the Bundesanstalt), probably the top technical bureau of the world at that time. The other unit manufactured by Dr. Weston, the founder of our Company, embodied his own version of certain novel features. Today, half a century later we have a rich summary of data on these old units. Any changes which were likely to have occurred in these items, have long since occurred and by constant checks against the working primary standards of the bureau it has been found possible to note carefully these changes as listed. These resistors are the basic working standards of our Company; however, each of these is supplemented by an auxiliary standard of a similar type and similar records are kept on these so that if some accident should happen to our basic standard, the auxiliary standard would take over as our primary standard. Weston no longer makes for commercial sale standard resistors as such, but the history of Weston made standards is still prevalent in the organization. The second partner in the list of primary standards is that of the Weston standard cell. It was introduced in 1892 and 1893 in two forms, the unsaturated and the saturated form. In the saturated form, slide No. 3, it had become a reproducible, stable and practical primary standard of voltage. In one leg is mercury and mercurous sulphate paste, in the other leg an amalgam of cadmium and mercury. In the legs of the "H" is a cadmium sulphate solution. In the saturated form of the cell the cadmium sulphate solution is in a permanently saturated state with an excess of cadmium sulphate crystals. With this type of cell a temperature coefficient of voltage is experienced of approximately -50 micro volts per degree C. This can be expressed by means of the Wolff formula in very exact terms. However, in order to be used as a practical standard it is common to maintain this all in a standard cell bath at a constant temperature which does not vary by more than plus and minus one hundredth of a degree. With these cells under such an

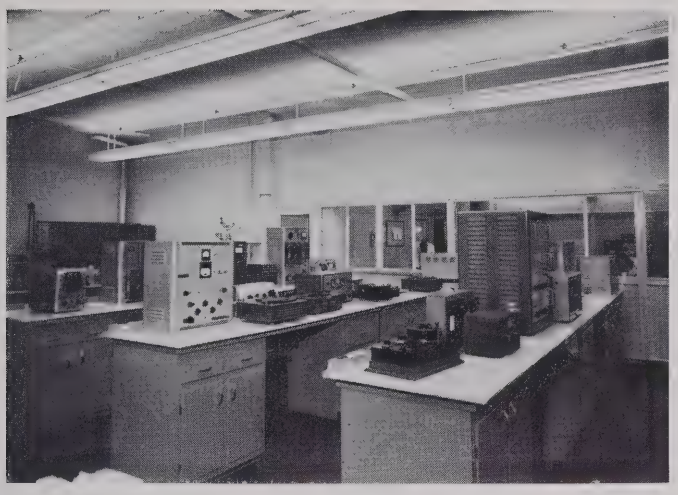

Slide 5—Standardizing Laboratory.

ITEM	RATED ACCURACY	NOMINAL VALUES	NOTES	CALIBRATION ACCURACY
RESISTORS	0.01%	0.0001 Ω TO 10,000 Ω	25°C	0.002% TO 0.005% (0.0001 Ω TO 0.01%)
CURRENT SHUNTS	0.04%	0.00001 Ω TO 20 Ω	1000 AMP TO 0.075 AMP	0.01% TO 0.05%
STANDARD CELLS (UNSATURATED)		1.0183 V TO 1.0198 V		0.01%
RESISTANCE BRIDGES	0.01% TO 0.02%			0.01%
RESISTANCE BOXES	0.01% TO 0.05%			0.01%
KELVIN BRIDGE	0.01% TO 0.02%			0.01%
RATIO BOX	0.01%			0.01%
POTENTIOMETERS	0.01% TO 0.02%			0.01%
VOLT BOXES VOLTAGE DIVIDERS	0.01% TO 0.04%	750 V TO 3 V/1.5 V	20% TO 100% RATED V	0.01%
FIXED CAPACITORS ADJ. CAP. BOXES	0.1% TO 0.5%	100 μμF TO 1 μF	60 CPS TO 1000 CPS	0.03% TO 0.1%
FIXED INDUCTORS ADJ. IND. BOXES	0.1% TO 0.5%	100 μH TO 10 H	60 CPS TO 1000 CPS	0.03% TO 0.1%
CURRENT TRANSFORMERS	0.3% RATIO 10 MINUTES PHASE ANGLE	0.1 AMP TO 4000 AMP	60 CPS	0.1% RATIO 2 MINUTES PHASE ANGLE
POTENTIAL TRANSFORMERS	0.3% RATIO 10 MINUTES PHASE ANGLE	TO 25,000 V	60 CPS	0.1% RATIO 2 MINUTES PHASE ANGLE
DC AMMETERS	0.1% TO 0.5%	100 μAMP TO 100 AMP		0.05% TO 0.1%
DC VOLTMETERS	0.1% TO 0.5%	0.1 V TO 1000 V		0.05% TO 0.1%
AC AMMETERS AC AND DC AMMETERS	0.1% TO 0.5%	10 MA TO 100 AMP	DC TO 30,000 CPS AC-DC DIFFERENCE	0.05% TO 0.1%
AC VOLTMETERS AC-DC VOLTMETERS	0.1% TO 0.5%	0.1 V TO 1000 V	DC TO 30,000 CPS AC-DC DIFFERENCE	0.05% TO 0.1%
WATTMETERS	0.1% TO 0.5%	0.1 TO 100 AMP 30 TO 1000 V	REVERSED DC AC-DC DIFF TO 3000 CPS	0.05% TO 0.1%

Slide 7—Typical test requirements.

environment, it is readily possible to achieve a few micro volts order of accuracy. Standard cells continue to be made in the Weston organization, indeed it is a thriving portion of our business. This places us in the fortunate position of having two excellent sets of primary working standards of ohms and volts which enables us to achieve the ultimate in precision and accuracy in supplying standardizing laboratories throughout the country with the ultimate in indicating instruments. It will be seen that once these fundamental standards are obtained and kept in good condition, a whole series of other tests become possible. To do this it is important that the working quarters of a standardizing laboratory be good. A common practice, for example, is to maintain the temperature at 73° plus and minus 1½° with a relative humidity at 50 plus and minus 2%. This gives a satisfactory choice, bearing in mind the consideration of the basic cost of the air-conditioning equipment, cost of operation and the comfort of the staff. The next three slides show some of the pictures of our own standardizing laboratory which you will see and visit later during your tour of the factory. Specifically, in this area cleanliness and adequate humidity and temperature have been stressed. There also is slight pressurizing of the room to help keep out dust particles. Slide No. 7 lists most of the important tests that are required in our own laboratories for our own usage on test panels, etc. To calibrate such items as occur on this list we must use perforce our standards of resistance and voltage. Just as important, however, is the intermediate and final test equipment that must be used with these standards to secure the desired results.

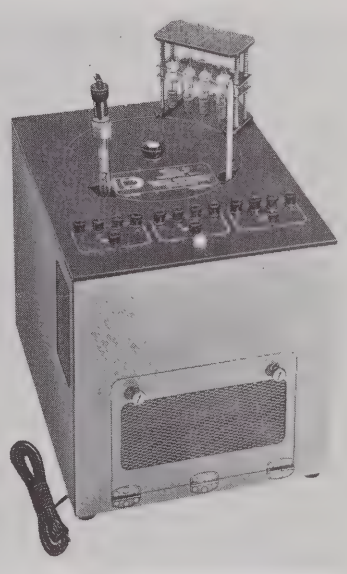

Slide 8—Weston Model 66 Standard Cell Temperature Bath for saturated standard cells.

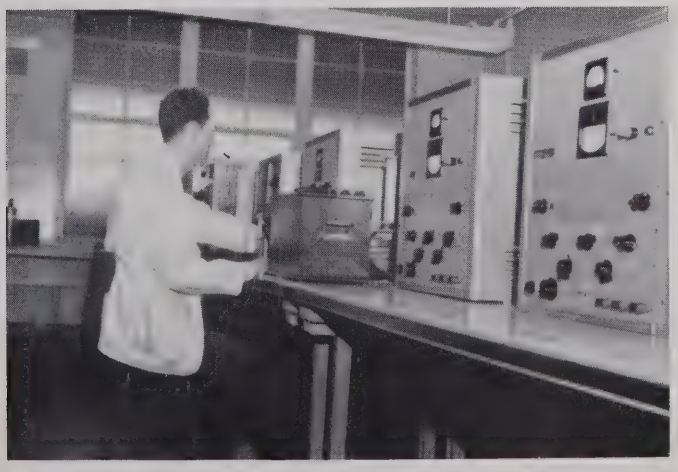

Slide 6—Standardizing Laboratory.

Consider first the intermediate type of equipment such as the standard cell temperature bath shown in slide No. 8. This unit is a control temperature bath designed to maintain three banks of saturated cells at a constant temperature of 35° C plus and minus .01° C. It is intermediate in the sense that it is not directly connected into the circuit. However, by its use it is sufficient to hold the temperature sufficiently constant to hold voltage variations of the cell to within ½ micro volt. The type of construction employed in the bath is that of a

Slide 9—Weston Standard Cell Comparator—Model 1000.

Slide 11—Panel view of Standard Cell Comparator.

rapid oil circulatory type. This is extremely important since standard cells not only have a temperature coefficient over-all but much more importantly have a temperature coefficient between the two legs of the "H" tube, one being −1,050 and the other +1,000 micro volts per degree C. It will be readily appreciated that air baths commonly employed for this type of duty do not have enough thermal transfer capacity to give adequate assurance that the legs are at equal temperatures. An electronic control unit under the supervision of a master thermostat maintains the desired temperature. The rack carrying cases are of the type that can immediately be transferred to the bureau for incorporation in their equipment for certification. After the intermediate type of equipment comes the test equipment designed for a specific test. Such an item shown in slide No. 9 is the Standard Cell Comparator. As the name implies, this piece of equipment was developed for the specific task of checking Standard Cells. This model, shown with associated equipment in slide No. 10, needs as an input a reference voltage such as would be obtained from a saturated standard cell in a controlled temperature bath. When this is done, the unit becomes a precision instrument capable of measuring the voltage of all unsaturated or common forms of standard cell and giving the voltage directly on an indicating instrument. It will do this very rapidly and simply to an accuracy of better than 5 microvolts, giving indications of both emf and internal resistance of the cell. In this way it is possible for a standardizing laboratory to rapidly check the emf and condition of all standard cells in a given plant and determine that these are in good condition on a permanent basis. The circuitry is shown in slide No. 12. This latter type of standard cell comparator comes very probably under the heading of calibration equipment. Necessarily such equipment must be precise, accurate and stable. It would be ideal if the equipment were also simple and reliable to operate and could perform its function at low cost rapidly. Much existing equipment, unhappily, is of the type which needs a plurality of operators and very frequent manual restandardization and checking due to its inherent fragility and uncertainty.

It has become very necessary over the course of years at Weston to devise a specific type of calibration equipment that can be used for determining scale characteristics of instruments that are our main source of business. Further, when these instruments are fully completed, our inspection must make doubly certain that they con-

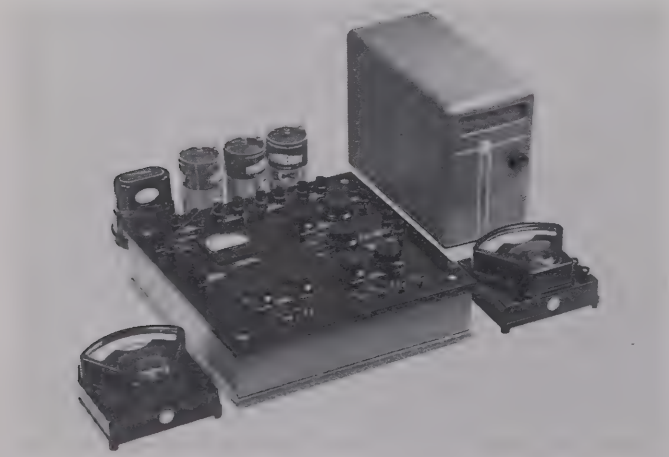

Slide 10—Weston Standard Cell Comparator with associated equipment.

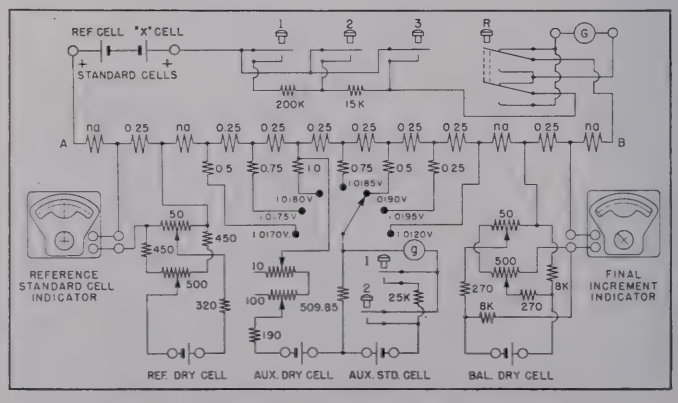

Slide 12—Circuitry of Standard Cell Comparator.

Slide 13—Weston D-C Voltmeter Calibrator—Model 64.

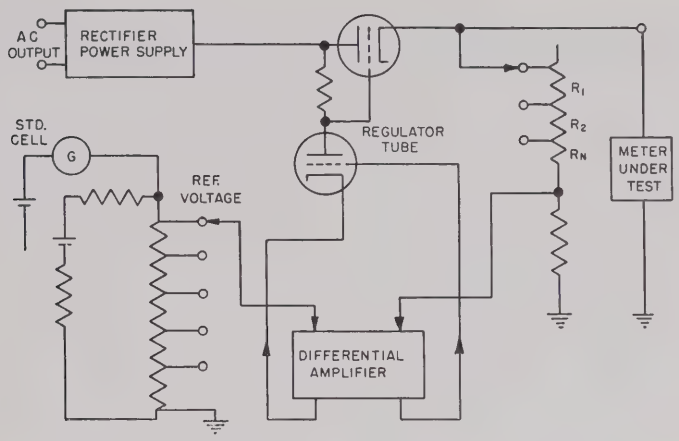

Slide 15—Equalizing Circuitry of Weston D-C Calibrator.

tinue to enjoy all the accuracy and stability inherent in their design. Since these instruments have to be sold on a competitive basis it has become important that our calibration test equipment must possess the attributes of accuracy, stability and simplicity as a first characteristic, but coupled with this must be the ideas of non ambiguity, constant standardization and constant accuracy at all points on the scale. It has been found possible to give one-man operation of these pieces of equipment which gives reduced calibrating time associated with continuity of accurate operation. The traditional concept of instrument calibration has been a two-man team—one controlling and measuring the energy supply to the instrument under test and the other man noting the indication of the instrument under test. When it is desired to check an instrument for accuracy, this can only be done when a constant indication is being held. This has led to the incorporation in the line calibrating equipment of an ultra stable power supply which has eliminated the need for the first man of the team supplying the energy. For general purpose usage four specific pieces of equipment are used.

a. D-C Calibrator—Millivolts, Volts, Microamps and Milliamps.

Resistors "R" are of nominal tolerance and serve to divide the output voltage of the rectifier into fifteen approximately equal parts. Precision resistors are not required in this divider. The resistances of the meters being tested will have a wide range of values, and may not even be known. Since the meters being calibrated are in shunt with a variable number of the resistors "R" as the output tap is changed, the specific output tap is sampled as to voltage output and this sample compared against the reference standard voltage. The sampling is accomplished by pairs of 0.02% resistors that are matched for ratio and temperature coefficient only. Their absolute values are not critical. Any difference in voltage between this sample and the reference standard becomes the input signal of a very stable and high-gain electronic servo-amplifier whose output adjusts the bias of a series regulator tube in a direction as to reduce the amplifier input signal to essentially zero.

The zero-drift and resolution of the amplifier contribute no more than 0.01% to the possible output error. The sampling resistors can contribute another 0.02%. The standard cell, which is of the unsaturated variety, can drift another 0.005% per year. It may therefore be seen that the rating of 0.05% applied to the output is conservative and valid over extended intervals between standardization checks. Adjustments are provided to standardize the Models 64 and 65 against various standard cell voltages as these cells age.

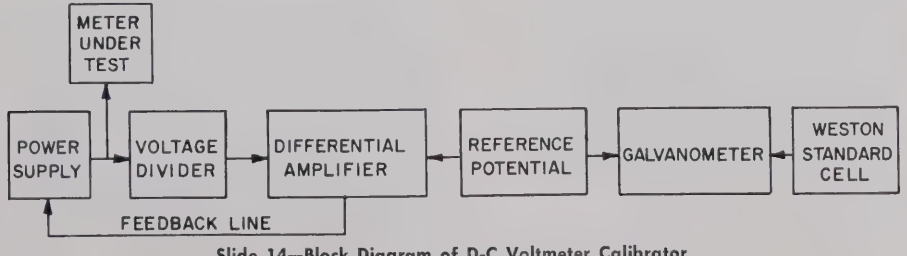

Slide 14—Block Diagram of D-C Voltmeter Calibrator.

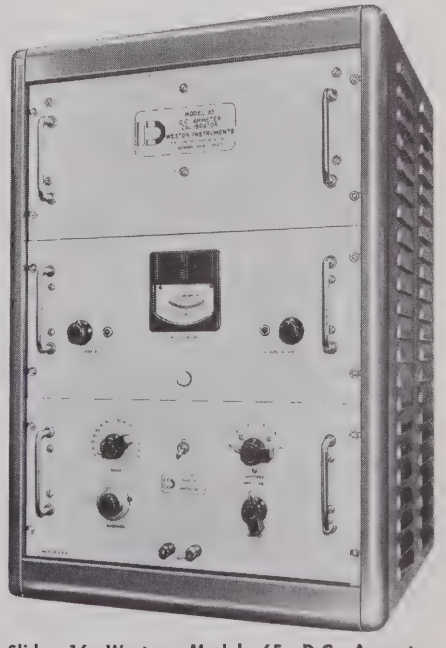

Slide 16—Weston Model 65 D-C Ammeter Calibrator.

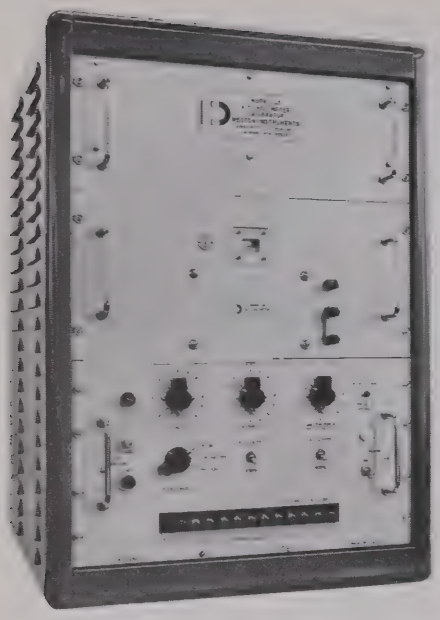

Slide 17—Weston Model 63 A-C Voltmeter Calibrator.

Function—Weston Model 64 Calibrator has been specifically designed to provide an easy and rapid method for precise calibration of direct current voltmeters—millivoltmeters—milliammeters—mirco-ammeters.

Features

Any range can be automatically divided into as many as 15,000 equally divided parts.

Any drift or deviation in output voltage is instantaneously and automatically corrected.

A reference standard (Weston Standard Cell) is provided so that calibrator can be standardized.

Semi-automatically divides each step equally regardless of the range or number of steps.

Can be used as a precise regulated d-c source.

Calibrator requires only *one* operator.

b. D-C Calibrator—Amperes.

Regulation of the Model 65 is very similar, but in this instance, precision shunts in the output circuit allow the millivolt drop across them to act as the sample to compare against the voltage reference standard. Any difference is again amplified and then used to regulate the power supply to exactly the output current required.

c. A-C Calibrator—Volts.

d. A-C Calibrator—Amperes.

Function—Weston Model 62 semi-automatic calibrator provides a quick easy-to-use and precisely accurate method of checking or calibrating a-c ammeters, from 1 to 50 amperes full scale inclusive.

Features

Scale can be subdivided into hundredths.

Calibrator will automatically divide any range into as many as 30 equally divided parts.

No longer necessary to compute the value of each check point and then set up several pieces of equipment to obtain the required current when calibrating a-c ammeters having odd ranges to match instrument transformer ranges.

Reading accuracy is assured through the use of mirror scales and knife-edge pointer on the precision monitoring instrument.

Calibrator can also be used as a precisely regulated constant current supply.

Slide 18—Weston Model 62 A-C Ammeter Calibrator.

Any load variation on the calibrator will be automatically adjusted.

Input power can be supplied from any standard 115 volt 60 or 400 cycle a-c source (400 cycles on special order).

Calibrator requires only *one* operator.

Specifications

Accuracy—0.05% of indicated value.

Ranges—1 through 50 amperes.

Range extremes—0.033 ampere—55 amperes.

Output power—10 volt amperes maximum.

E. N.—No. 129 —*R. C. Langford.*

WESTON DISTRICT OFFICES AND REPRESENTATIVES

DISTRICT OFFICES

ALBANY
BOSTON
BUFFALO
CEDAR RAPIDS
CHICAGO
CINCINNATI
CLEVELAND
DAYTON
DETROIT
HARRISBURG
HOUSTON
KNOXVILLE
LOS ANGELES
MILWAUKEE
NEWARK (UNION, N. J.)
NEW ORLEANS
NEW YORK
PHILADELPHIA
ROCHESTER
SAN DIEGO
SAN FRANCISCO
SEATTLE
SYRACUSE
WASHINGTON, D. C.

WESTON REPRESENTATIVES

AMARILLO—Butler and Land
ATLANTA—E. A. Thornwell, Inc.
BALTIMORE—Thomas H. Closs
CHARLOTTE, N. C.—Ranson, Wallace & Co.
DALLAS—Butler and Land
DENVER—Peterson Company
JACKSON—Curtis H. Stout, Inc.
JACKSONVILLE—Ward Engineering Co., Inc.
KANSAS CITY, MO.—C. B. Fall Co., Hickman Mills
LITTLE ROCK, ARK.—Curtis H. Stout, Inc.
MEMPHIS—Curtis H. Stout, Inc.
MIDDLETOWN, CONN.—Dittman & Greer, Inc.
MINNEAPOLIS—Pinkney & Hine
ORLANDO, FLA.—Ward Engineering Co., Inc.
PHOENIX—J. E. Redmond Supply Co.
PITTSBURGH—Russell F. Clark Co.
RICHMOND, VA.—Ranson, Wallace & Co.
SHREVEPORT—Curtis H. Stout, Inc.
ST. LOUIS—C. B. Fall Company
TULSA, OKLA.—Riddle and Hubbell Co.

CANADA

MONTREAL—Daystrom, Limited
TORONTO—Daystrom, Limited

EXPORT and OVERSEAS

Daystrom International
100 Empire Street, Newark 12, N. J.

WESTON MODEL 610 D-C SUMMATION METER

General

THE Naval Research Laboratory at Washington, D. C., has developed an Air Analyzer System. One of the components of the system is a d-c switchboard instrument capable of an indication which is proportional to the millivolt output of five independent circuits. A Model 610 D-C Summation Meter, described herein, was developed at Weston to meet the requirements of the Air Analyzer System.

The D-C Summation Meter, as shown in Figure 1, contains a 1.0″ Cormag® mechanism with five independent windings on the movable coil. It was designed to provide a pointer deflection proportional to the millivolts applied to one or more of the circuits. Each of the five circuits on the movement is approximately 50 ohms, and the sensitivity is such that 1 milliampere flowing through any circuit will produce full-scale deflection. The prominent pear-shaped pointer of the movement, combined with highly legible black scale markings on a white background, provides maximum readability.

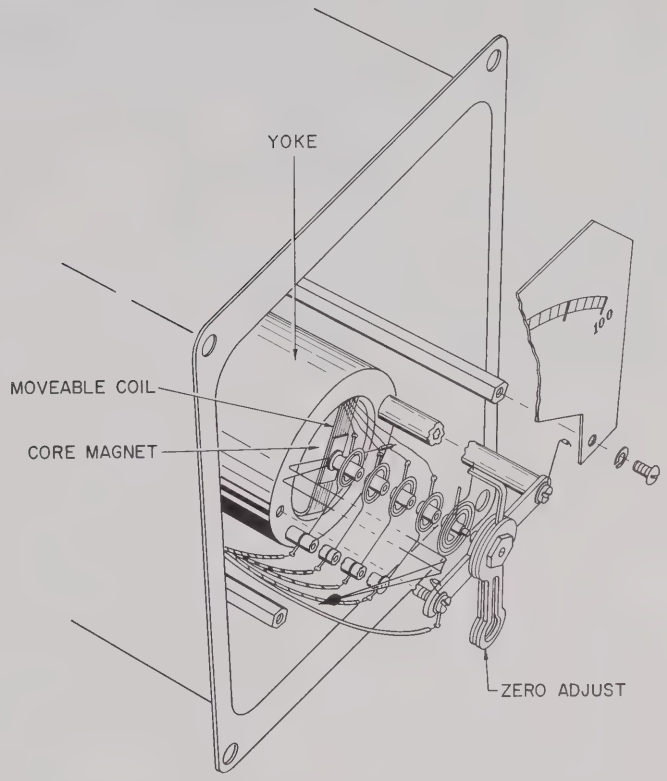

Figure 1—Exploded view of mechanism assembly. Weston Model 610 D-C Summation Meter.

Instrument Housing

The instrument housing consists of a steel case, Bakelite base, and Bakelite cover. Four #8-32 threaded mounting studs of the flush type case are an integral part of the flange, and are suitable for mounting the instrument on panels up to ½″ thick. Five marked sets of #10-32 threaded back connection studs are included on the Bakelite base and an external zero corrector is provided which is accessible from the front of the instrument. Internal illumination can be provided by means of two internally mounted 6 volt Mazda #47 lamps connected in parallel.

Front, side, and rear views of the instrument are shown in Figures 2, 3, and 4.

Mechanism

The mechanism of the Summation Meter, as shown in Figure 5, is the inherently stable 1.0″ Cormag mech-

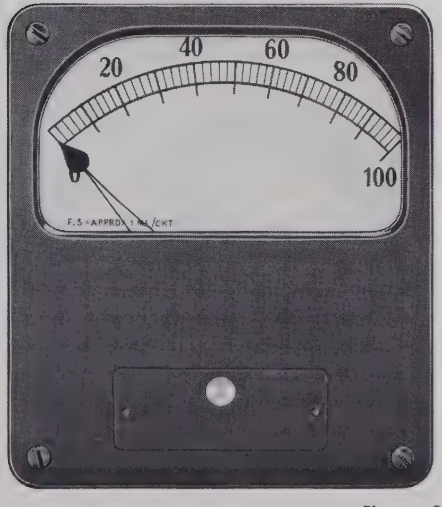

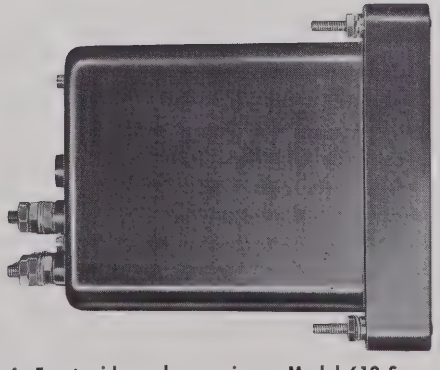

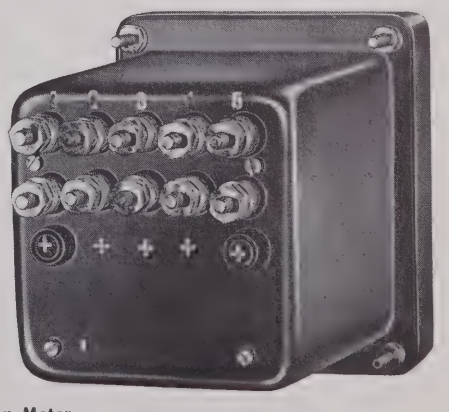

Figures 2, 3, 4—Front, side and rear views—Model 610 Summation Meter.

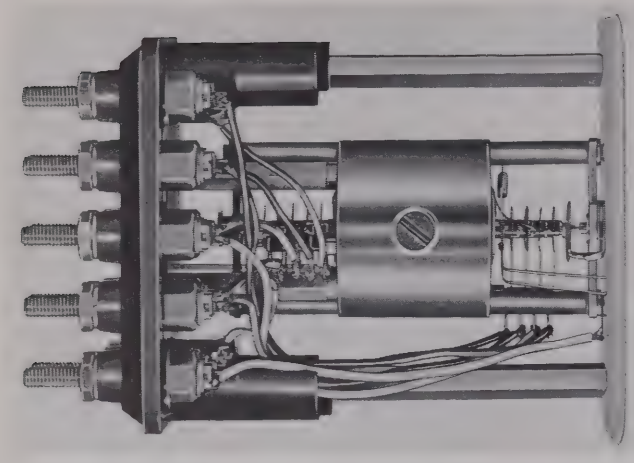

Figure 5—Mechanism Assembly of the D-C Summation Meter.

anism used with Weston portable and laboratory standard type instruments. This mechanism is a permanent-magnet pivoted movable coil design consisting of: an Alnico magnet, soft-iron pole pieces, and a return path or yoke of soft iron. Fewer parts are contained in the compact 1.0″ Cormag mechanism than in a comparable C-shaped magnet construction, resulting in a weight advantage of .7 lb.

The magnetic shielding property of the mechanism is significant. External magnetic flux is carried around the magnetic system of the mechanism by the yoke, thus preventing an external field from entering the air gap and affecting the reading of the instrument. A magnitude of shielding may be visualized if we consider the magnetic field produced by a current-carrying conductor. A 50-oersted field, which may be obtained 16 inches away from a 10,000-ampere conductor, would produce a transient error of less than .7% measured on the self-shielded Cormag mechanism, while the permanent error would be negligible.

The movable element of the mechanism includes a multiple circuited movable coil, two extended pivot bases, pointer, and ten control springs. The complex movable coil is frameless and contains five independent windings of aluminum wire. Each winding is insulated to serve as one of the instrument circuits. A frameless coil, although more difficult to fabricate, was necessary to provide the instrument with a satisfactory damping factor. Low external resistance of the millivolt circuits and the damping produced by all five circuits would result in an extremely overdamped instrument if the windings were wound on a frame. Aluminum wire was specified since a similar copper winding would increase the movable coil weight, thereby decreasing the torque-to-weight ratio of the movable element, and increasing the pivot friction of the instrument to an undesirable level. Windings of the coil are progressively wound and insulation is applied between windings. All spring terminals of the control springs are extended to allow the leads of the movable coil to be connected without interfering with convolutions of the springs. A zero corrector abutment of the top bridge is directly connected to the top spring. To obtain the correct amount of zero correction, this spring has a restoring torque 33% greater than that of the sum of the other springs and twelve times that of the torque of each of the other springs.

Bridge support studs of the mechanism are exceptionally long to provide adequate clearance between the movable coil and bridges. Clearance was required for mounting five springs and insulators on each pivot base.

On the yoke of the mechanism are two projections which are secured to the top and bottom surfaces of the yoke. Each projection is mounted with terminals and insulators which serve to conduct the current from the back connection studs through the springs to the windings of the movable coil. The projections are so positioned that the control springs when deflected will not interfere with the bridge support studs.

Electrical Characteristics

The Model 610 Summation Meter has a full scale deflection angle of 86 degrees and a scale length equal to 3.5 inches. For the Air Analyzer System, each of the circuits was externally adjusted to 50 millivolts. A damping factor of 100 exists with all circuits connected. The damping factor, being a function of the number of circuits energized, will decrease if less than five circuits are used. Response time of the instrument for 99.8% of full scale deflection is in the order of 1.5 seconds.

Calibration of the instrument is performed on one circuit and the other circuits will track within 1% of full scale of this calibration. Basic accuracy of the instrument is 2% of full scale.

The Summation Meter is capable of withstanding a dielectric test voltage of 5 volts between circuits and 2,600 volts, 60 cycles RMS between the mechanism and the case, mounting hardware and zero corrector.

E. N.—No. 130 —*C. B. Stegner.*

Weston
ENGINEERING NOTES

VOLUME 13 MARCH 1959 NUMBER 1

In This Issue

Advanced Design of a Cormag® Mechanism for Panel Instruments

Instrument Bearings—Glass Jewels Versus Sapphire Jewels

Ampère and the Birth of Electrodynamics

John Parker, Editor

W. A. Graham, Technical Editor

Copyright 1959,
Weston Instruments

WESTON INSTRUMENTS
Division of Daystrom, Incorporated,
614 Frelinghuysen Avenue,
Newark 12, N. J., U. S. A.

ADVANCED DESIGN OF A CORMAG® MECHANISM FOR PANEL INSTRUMENTS

General

THE introduction of dispersion-hardening alloys to the electrical instrument industry made available a source of magnetic energy that was many times more powerful than the quench-hardening materials that were in use up to that time. This enabled the designers to utilize smaller and smaller magnets for applications and finally culminated in a size that was small enough to fit within the confines of the movable coil. Thus, the core magnet mechanism, which in the following paragraphs will be designated as the CORMAG, was made a practical reality.

The CORMAG type of electrical instrument has the advantage, as compared with the conventional C-shaped magnet and soft iron core types, of fewer parts, less material, smaller size, lighter weight, and the resultant lower cost, for a given instrument sensitivity. Such instruments are also self-shielded against external magnetic fields since the soft iron yoke or return path for the magnetic flux extends around the permanent magnet core.

These many advantages have led to the expansion of the CORMAG into laboratory, switchboard, portable, and panel instruments.

Construction of the CORMAG

The CORMAG mechanism, as shown in Figure 1, consists of a permanent magnet core structure comprised of a permanent magnet and a pair of soft-iron pole shoes positioned on opposite sides of the magnet, having surfaces mating with the polar surfaces of the magnet. Such parts are secured together without the use of screws, solder or other separate fastening means to provide a rugged, yet functionally accurate, device. The two pole shoes of this design are held firmly to the magnet by the two end caps. The end caps, made of non-magnetic die-cast material, include lugs that serve to locate the system within the soft iron yoke. The end caps are secured to the pole shoes by forcing a portion of the end cap side wall into an undercut portion of the pole shoe. This is done by pressure applied to the edge of the end cap wall by means

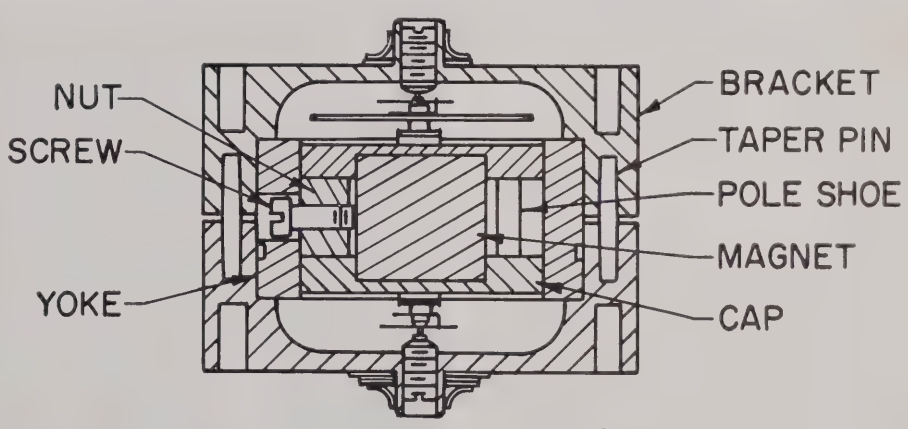

Figure 1—Cross section of CORMAG mechanism.

®Weston registered trade name.

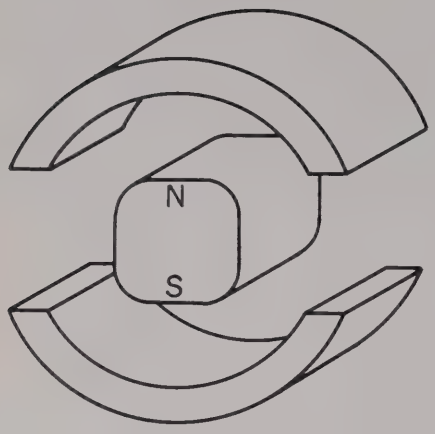

Figure 2—Soft iron pole shoes and magnet.

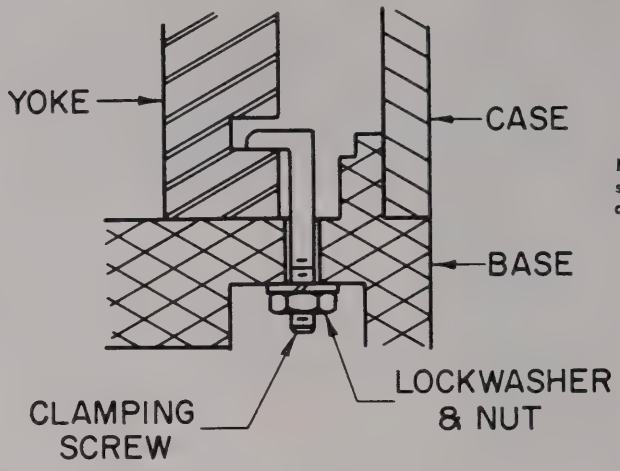

Figure 3—Diagram showing function of cam-headed clamping screw.

of a suitable tool to deform the cap wall. The caps serve to hold the pole shoes in position against the magnet. With this arrangement, the parts form an interlocked assembly, with each part properly positioned relative to the other parts.

The magnetic flux distribution on the surface of the magnet is somewhat non-uniform. This is due mainly to the inevitable variations of the coarse crystal structure of this class of magnet material. The irregularity in flux distribution is compensated by soft iron pole shoes in combination with patented cuts at the magnetic axis of the magnet (Figure 2). The magnetic flux emanating outwardly from the pole shoes is, for all practical purposes, uniform over the surface of the pole shoes.

The yoke, machined from cold drawn steel, provides a return path for the magnetic flux and shields the air gap flux from external fields. A horizontal slot around the circumference of the yoke is used for mounting purposes by providing a seat for cam-headed clamping screws. (See Figure 3.) Top and bottom brackets of die cast metal act as bridges and are positioned in keyways on the outside diameter of the soft iron yoke. The hub section of the bridges are tapped for the jewel screws which engage the pivots of the movable element. The springs of the movable element are soldered to top and bottom abutments that are secured to the bridges with bell grommets. The bell grommet is forced over the O.D. of the hub and provides spring tension against the abutment. The bottom abutment is insulated from the bottom bridge by being sandwiched between two insulating washers. The assembled top and bottom bridges are secured together on the O.D. of the yoke with machined stainless steel tapered pins.

The yoke, core, and bridges, etc., of the CORMAG provide a mechanism of only 29 parts, whereas a similar C-shaped magnet and soft-iron core type mechanism may contain in the order of 68 parts. (See Figure 4.) In this comparison, the

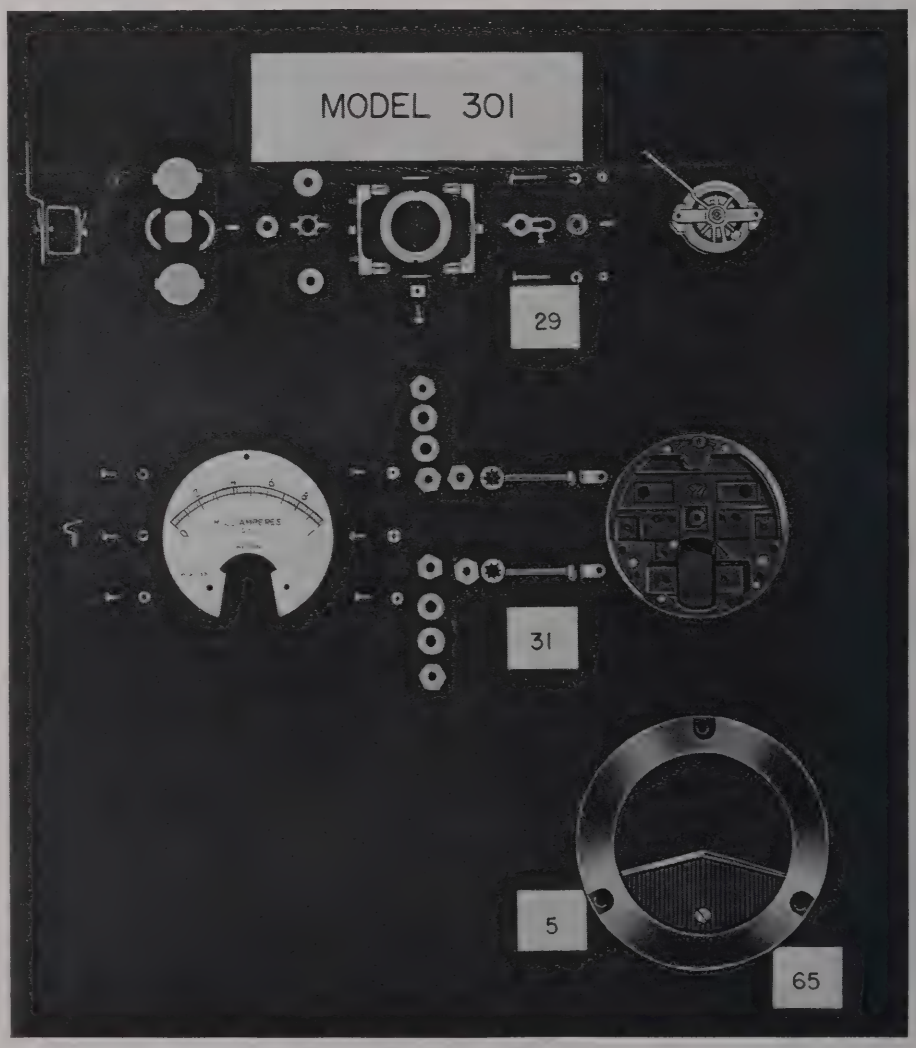

Figure 4—Exploded view of Weston Model 301 mechanism and housing.

Postage Will Be Paid by Addressee

No Postage Stamp Necessary If Mailed in the United States

BUSINESS REPLY CARD

FIRST CLASS PERMIT No. 392 NEWARK, NEW JERSEY

WESTON INSTRUMENTS,
DIVISION OF DAYSTROM, INCORPORATED
614 FRELINGHUYSEN AVENUE
NEWARK 12, NEW JERSEY

Adv. Dept.

LITERATURE REQUEST CARD

Date.....

Please send me information on the new products checked below:

- ☐ NEW PANEL INSTRUMENTS
- ☐ ELECTRONIC WATTMETER
- ☐ METAL FILM RESISTORS
- ☐ MILLIVOLT AMMETER
- ☐ PRECISION INTEGRATOR
- ☐ VOLT-OHM-MILLIAMMETER

NAME
(Please Print) ..... TITLE .....

COMPANY .....

ADDRESS .....

CITY ..... ZONE ..... STATE .....

movable element proper has been considered as one part. The fewer number of parts means less tooling, fewer parts to stock, less handling time, reduced inspection time, and considerable saving in the assembly of the instrument. The smaller number of parts also results in a weight advantage. The total weight of the CORMAG mechanism used in the Model 301, a 3½" d-c panel instrument, is 0.1 lb. Efficient utilization of Alnico magnet material is shown in that the Model 301 magnet weighs .015 lbs. and a similar chrome C-shaped magnet producing the same flux may be in the order of 0.13 lbs., or over eight times as much.

The type of construction described provides a mechanism of rigid mechanical design comprised of individual elements which can be made by mass production methods and which are relatively simple to assemble.

Design Consideration for Typical Instrument Application Model 301—3½" D-C Panel Instrument

The use of the CORMAG mechanism in a typical d-c panel instrument, the Model 301, offers an instrument that provides adequate space for rectifiers, spools, shunts, thermal elements, and resistors in the base of the instrument.

The Model 301 instrument is a 3½" flange type d-c panel instrument containing a CORMAG mechanism and designed to meet the dimensional, electrical, and environmental requirements of the military specification for panel instruments, MIL-M-6B, and the American Standard for Electrical Indicating Instruments C39.1-1955. (See Figure 5.)

The housing for this instrument consists of a base and case of molded thermosetting plastic material. A glass window is secured to the case with a pressure-fitted bezel ring. The dial of the instrument is secured by screws to the top bridge of the mechanism. This insures positive positioning of the dial relative to the mechanism. The contour of the dial opening is shaped to act as a pointer stop to limit the travel of the pointer of the movable element. The mechanism is positioned in the base by means of projections on the bottom bridge which engage into molded recesses in the base. The cam-headed clamping screws are used for securing the mechanism to the base. This type of mounting provides positive positioning of the mechanism relative to the base.

The case of the instrument is fastened to the base, utilizing radial

Figure 5—Typical Weston D-C Panel Instrument using CORMAG mechanism.

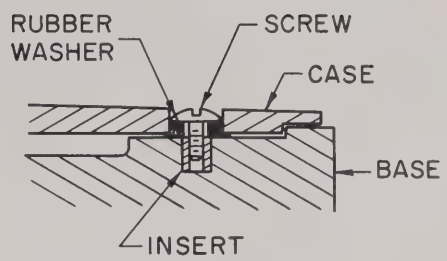

Figure 6—Diagram showing case-to-base mounting.

holes aligning with threaded inserts forced into radial holes in the base (Figure 6). A washer of deformable but relatively non-compressible material is positioned in each hole in the case; and individual screws pass through the washers and into the threaded inserts in the base. The screws provide sufficient pressure to cause the washer to conform to the contour of the hole and a portion of the washer to extend into the clearance area between the case and the base.

A zero corrector is provided in the case since it suffices to say that an instrument is no more accurate than the ability with which it can be set to the zero line of the scale.

Solder type terminals are secured to the base of the instrument with push-on type speed nuts. The outer end of this terminal is designed to permit direct soldering. The terminals are suitable for self-contained ammeters both d-c and RF (Model 303) to 10 amperes. By intent, the housing design permits the adaptation of one or more additional modified terminals, should it be necessary.

Electrical Considerations

The Model 301 instrument offers a wide gamut of performance with ample flux to provide adequate torque under a variety of design conditions. Instruments using this mechanism can be designed for high speed or for low speed; and a wide range of damping is available to the instrument design. The sensitivity range of the instrument not only equals that of conventional C-shaped chrome magnetic systems, but, in addition, gives a considerably improved torque-to-weight ratio for equivalent ranges together with a lower energy consumption.

The shielding properties of the CORMAG mechanism of the Model 301 instrument provides an instrument that can be mounted interchangeably on magnetic and non-magnetic panels. In addition, instruments mounted in close proximity have no effect on each other. The instrument is comparatively unaffected by external magnet fields. For example, with the instrument mounted as close as a foot to a heavy busway carrying 3,000 amperes, the readings of the instrument will not be influenced.

The basic accuracy of the Model 301 instrument is within ±2% of full scale range. When a rectifier is associated with the mechanism to make an a-c rectifier type instrument, it is called a Model 302 instrument and has an accuracy rating of ±3% of full scale range when used on a 60-cycle sine wave at normal room temperature.

The Model 301 and 302 instruments are offered in typical ranges as microammeters, milliammeters, ammeters, and voltmeters.

E. N.—No. 126 —*C. B. Stegner.*

INSTRUMENT BEARINGS— GLASS JEWELS VERSUS SAPPHIRE JEWELS

This article by Mr. A. T. Williams of the Weston Engineering Department, originally entitled "Characteristics of V Bearings," was presented at a Navy Seminar on November 3, 1950, under the sponsorship of the Instrument Jewel Bearings Committee of the American Ordnance Association. It was originally printed as a part of a pamphlet entitled "High-Precision Antifriction Ball Bearings." This article outlines the reason for the development and the salient results of a comprehensive research on the making and characteristics of both pivots and jewels.

Figure 1—Magnified view of unmounted glass jewel.

PRIOR to 1940, the use of sapphire "V" jewels in electrical measuring instruments was traditional in the industry. The majority of these jewels were made in Switzerland, and, though a parallel American industry was developed, it was not possible to compete price-wise with the Swiss, who operated with lower labor costs and with the traditional skill evolved through generations of watch-jewel manufacturing. As a result, the supply of American-made jewels, using natural American sapphire, was reduced almost to the vanishing point so far as the number of American manufacturers was concerned.

A similar competitive process took place in Great Britain and eventually resulted in the practical extinction of the native British jewel industry. This fact created a crisis in Great Britain because soon after the outbreak of hostilities, the exporting of Swiss jewels to Great Britain ceased and the instrument manufacturers of Great Britain were left without a source of supply. The seriousness of this crisis is plainly apparent when it is remembered that not less than two V jewels are used in every electrical instrument on an airplane—not to mention all the other applications of instruments for war purposes.

As the crisis developed in Great Britain, our British correspondents cabled, requesting that we organize the American jewel industry, and arrange to ship to Great Britain many thousands of these jewels each week. Unfortunately, it was impossible to organize an increased output in the American jewel industry, as there was no reservoir of trained help, and no prospect of being able to train workers for this tedious, painstaking work within a reasonable time.

Glass Jewels

Fortunately, Weston started some research work on the problem of producing V jewels in 1934. Although no glass jewels were being used in electrical measuring instruments at that time, there had been prior work done in this field and, in fact, a patent had been issued on glass jewels as early as 1899. There was a strong prejudice against the use of softer materials to replace sapphire, based largely on the fact that sapphires had always been used. Despite this prejudice, it was decided to proceed with experimental work on glass jewels in the hope that the shape of the glass could be controlled, and the operation of polishing, with its inherent inaccuracies, eliminated through the

use of a glass which would maintain its naturally high surface polish.

Having in mind the fact that from time immemorial most of the ma-

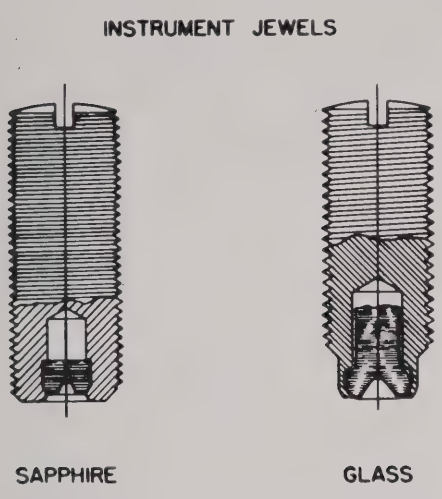

Figure 2—Sapphire and glass jewels mounted into jewel screws.

chinery in the world had been constructed with bearings of material less hard than sapphire, it seemed just a matter of engineering skill to be able to design a properly proportioned instrument jewel in which softer materials could be successfully used.

The problem was not simple, however, because the pressures per square inch of bearing surface involved in instrument service far

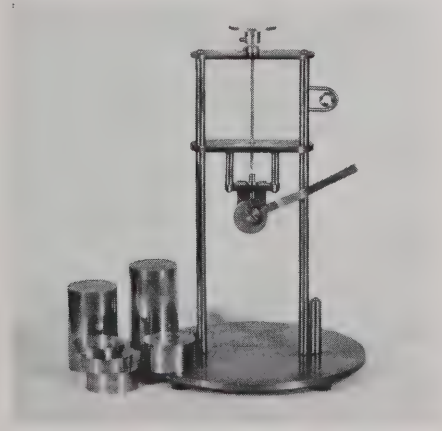

Figure 3—Static load-testing mechanism.

exceed those encountered in normal machine practice, being in the nature of ten tons per square inch and higher. Obviously, pressures such as these preclude the use of any bearing material that could normally be called "soft."

After many months of work and a great many failures, samples of glass jewels were produced having approximately the shape and polish desired. The original production of these jewels, in 1934, was on a purely experimental basis, as a proper technique for controlling the dimensions and surfaces had not then been perfected.

During this development period, laboratory and field tests were carried on simultaneously. As a check on some of the tests conducted in the laboratory, field tests were made by having fifty meters made, twenty-five of the meters containing sapphire jewels and the other twenty-five containing glass jewels.

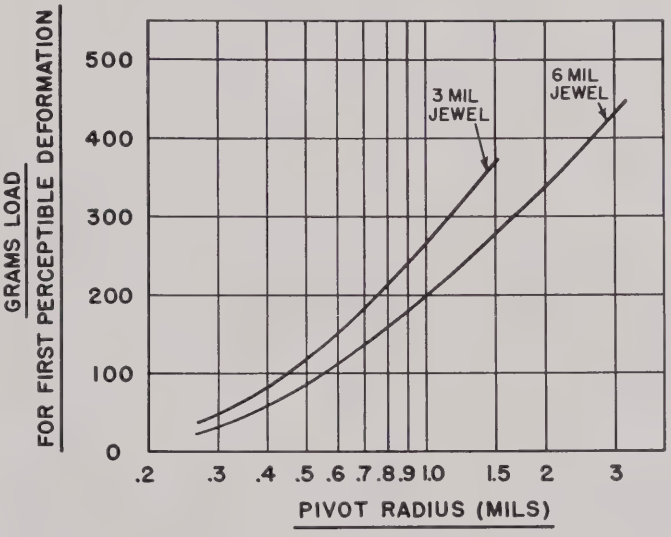

Figure 4—Deformation load curves on glass jewels under static test loads.

These fifty meters were packed in a case, according to our standard packing methods, and shipped back and forth across the country many times, until it was certain that a reasonable transportation test had been made.

On the final return of the instruments, the entire lot was subjected to rigid inspection. It was discovered that less damage had occurred to the instruments with glass jewels than those with sapphire. This, at least, confirmed the theory that if properly proportioned glass jewels could be made, it would be quite possible to use them for instrument bearing applications.

The reason for the success of the glass jewels lay in the fact that both the end shake and the side shake of the pivots had been reduced by proper shaping of both parts of the bearing and an improved surface free of abrasive material, thus reducing the wear caused by vibration during shipment.

Test Was Successful

The success of this test was so encouraging that the experimental work was continued and a small pilot plant was set up to determine if these jewels could be made on a commercial basis. In this pilot plant, the necessary technique for controlling the dimensions, quality of surface, suitable type of available glass, and other factors, were carefully worked out. Eventually the effort resulted in the development of a sound technique which produced glass jewels of high quality without excessive rejections.

The pilot plant was in operation at the time the call came from Great Britain for assistance in organizing the American jewel industry. Realizing the seriousness of the situation in Great Britain, it was decided that it would be possible to train operators quickly to produce enough of these jewels to take care of the immediate requirements of our own correspondents in Great Britain. A cablegram was sent explaining the nature of our new development, and guaranteeing proper performance of airplane instruments using these glass jewels. Under the circumstances, the British manufacturer had little choice but to authorize us to proceed—which

we did; and within a short time very encouraging deliveries in increasing quantities were made.

Figure 1 shows an unmounted glass jewel. The V is formed by forcing an accurately ground stylus into the heated glass. The contour is accurately held to close tolerances and the hard vitreous surface is completely free of any abrasive material.

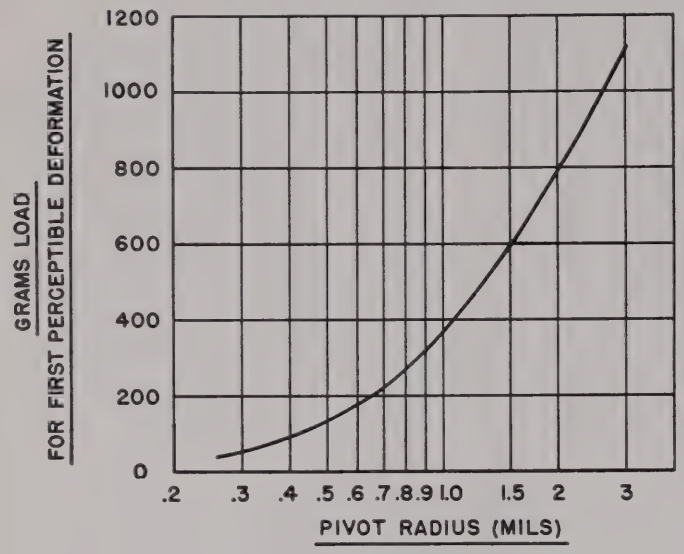

Figure 5—Static load necessary to deform steel pivot.

Curve	Material	Lubricated	Jewel Pit Radius
GD3	Glass	No	3 Mils
GL3	Glass	Yes	3 Mils
GD6	Glass	No	6 Mils
GL6	Glass	Yes	6 Mils
SD6	Sapphire	No	6 Mils

Figure 2 shows a glass jewel and a sapphire jewel mounted into jewel screws.

Figure 3 shows the static loading mechanism used during the development work to determine the static load necessary to deform the glass jewel. This deformation is always in the form of a slight splintering of the glass at the point of contact with the pivot. The jewel under test was examined by means of a 40-power microscope although in many cases a sharp needle used as a feeler proved more sensitive in locating a deformation.

Figure 4 shows the static loads necessary to cause deformation of the glass jewels when pivots of various radii are used. It will be noticed that the 3-mil radius jewel will support more load than the 6-mil radius jewel before deforming, the reason being that the contact circle or contact area is greater.

Figure 5 shows the static load necessary to cause deformation of the steel pivot. It is of interest to note that the glass jewel will deform with a static load which is approximately seventy-three per cent of that which will deform the pivot.

This action helped to tide over the British jewel crisis until such time as they were able to take over the manufacture of glass jewels themselves.

Foreseeing that a similar crisis might easily arise in the United States. if the United States was drawn into the war, it was decided to keep the pilot plant in operation, so that we might have a small force of adequately trained operators to take over in case the American supply of jewels became exhausted. This resulted in what appeared to be a rather unwieldy stock of glass jewels at the time; but our own crisis arrived within a little over a year, and subsequently Weston was in a position to take care of its own jewel requirements without any letdown in production, by using glass rather than sapphire in increasing quantities at a time when sapphire was not available.

In addition to the very practical test of shipping completed meters back and forth across the country, considerable technical and test data have been taken.

Testing Mechanism

Figure 6 shows a mechanism used to test the frictional torque of pivots and jewels. The small motor has a collet on the end of the vertical shaft into which a pivot can be mounted with the sharp end upwards. The jewel mounted in its screw is screwed into the hub of the disc and this entire assembly is then placed on top of the pivot so that the jewel and pivot are in proper contact.

The entire assembly was placed into a vacuum chamber to eliminate air resistance. Power was applied to the motor and the pivot rotated at the same speed as the motor. Because of the friction existing between the pivot and the jewel, the hubbed disc will slowly accelerate. After the hubbed disc has attained a speed of about 0.2 revolution per second, the motor was shut off and the seconds per revolution noted until the disc came to rest. These results were plotted and from these data the deceleration in radians per second was computed. Since the moment of inertia of the disc was also known, the frictional torque could be then calculated.

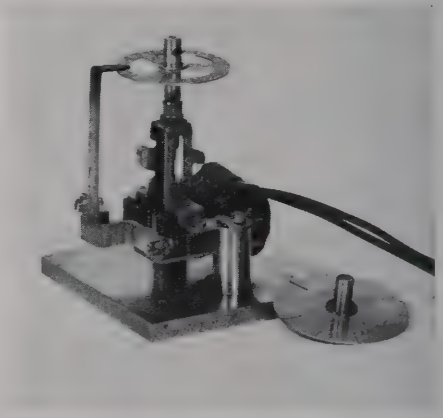

Figure 6—Device to test frictional torque of pivots and jewels.

Figure 7 shows the results of the frictional tests. Note that the frictional torque of the glass and sapphire jewels is about the same. From these curves it is also evident that lubrication is an advantage to a slight degree.

Figure 8 shows a shock testing mechanism. By means of this mechanism, instruments can be subjected

to impacts ranging from 0 to 300 "G" units. There is a fair correlation existing between impact test data on this machine and the static load test data previously shown.

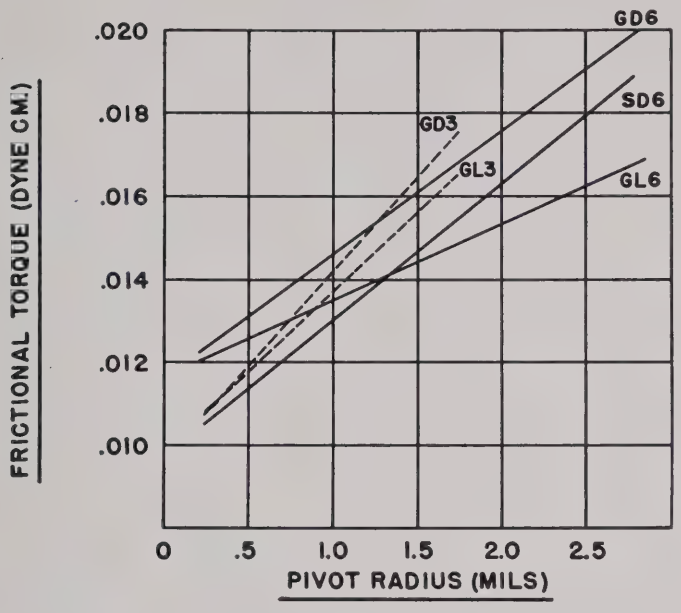

Figure 7—Results of frictional torque tests on glass and sapphire jewels.

Instruments subjected to high impacts will invariably show that when the instrument bearing consists of a sapphire jewel and a steel pivot, the steel pivot will be deformed and when the instrument bearing consists of a glass jewel and a steel pivot, the glass jewel will be deformed.

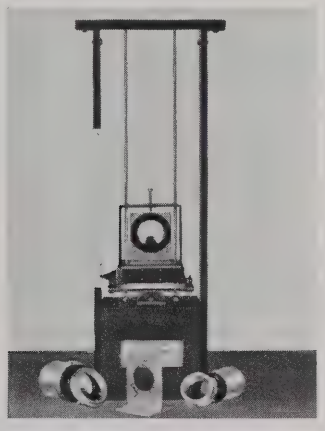

Figure 8—Panel instrument shock tester with dismounted instrument support and accessories.

There is some advantage in having the jewel fail first as the jewel is more easily replaceable. Also based upon many observations, an instrument with a good pivot in a deformed jewel will have considerably less friction than a deformed pivot in a good jewel.

Figure 9 shows a commercial vibration machine on which instruments can be mounted and vibrated at various amplitudes and frequencies. Instruments subjected to vibration will almost invariably show the following:

When the instrument bearing consists of a steel pivot and a sapphire, jewel vibration will almost invariably wear the pivot and these minute steel particles will oxidize and form iron oxide which in turn will abrase the pivot still further until the jewel is covered with red rouge and result in an unusable instrument. When the bearing consists of a steel pivot and a glass jewel, the formation of iron oxide due to vibration is either entirely missing or the time of vibration necessary to produce iron oxide will be from 25 to 100 times the time required for a comparable amount which will develop in a sapphire jewel.

The foregoing statements are based upon many tests by Weston and also the National Bureau of Standards, Navy Department, Bureau of Ships, Royal Aircraft Establishment, Farnborough, England, and many other laboratories.

The reasons for the superior performance of the glass jewels are not entirely apparent, but it is quite possible that the erosion of the pivot and the resultant rouge are due to: (1) The fact that the contour of the "V" is not as uniform in the sapphire as it is in the glass jewel, hence has more "play"; or (2) The sapphire surface has occluded abrasive materials which are entirely absent in the vitreous surface of the glass jewel.

The glass jewel, which was expedited into commercial use by the necessities of war, has replaced the sapphire jewel in Weston instruments to the extent that eighty-three per cent of the meters being manufactured now contain glass jewels.

The question is often asked whether glass jewels are really superior to sapphire jewels. Sapphire is practically indestructible and, therefore, on a strict comparison basis, the sapphire is both harder and less likely to be damaged. A comparable question would be to ask if babbitt is as good as hardened steel and obviously it is not as good or as hard, and yet the combination of a steel shaft rotating in a babbitt bearing has been used for at least 75 years and automobiles and large motors still use this combination of a hard steel shaft rotating in a material which is substantially softer. In a similar manner, the instrument bearing consists of hard steel pivots rotating in glass jewels and our tests and the tests made in other laboratories have proved the superiority of a steel pivot and a glass jewel to that of a steel pivot and a sapphire jewel.

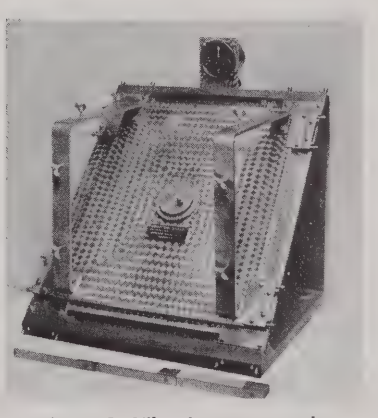

Figure 9—Vibration test stand.

E. N.—No. 127 —*A. T. Williams.*

AMPÈRE AND THE BIRTH OF ELECTRODYNAMICS

Ampère, Volta, Ohm, Watt: who were they and why have we used their names for our fundamental electrical quantities? Mr. Henry Berring of our executive staff, currently Chief Engineer of Daystrom International, has been interested in this matter for many years. His paper on Georg Simon Ohm (Weston Engineering Notes *Vol. 7, No. 2, July, 1952) is well remembered. He has long shared this historical interest with Mr. John H. Miller, Consultant to Weston, retired Vice President and Chief Engineer, to whom he extends his gratitude for much encouragement and advice.*

Mr. Berring tells us that a study of the work of Ampère has been particularly frustrating: although it was largely performed from about 1820 to 1827, there appear to be no published reports of it until 1885. Publication of the great French scientific journal, "Comptes Rendus," was suspended a number of years prior to 1800 in the aftermath of the French Revolution. The "new" series of "Comptes Rendus" which started in 1836 did not in any way attempt to cover prior discussions and reported only on matters current and proposed. Thus, these papers by Ampère on electrodynamic action were not published until 1885 as referred to in Mr. Berring's first footnote. He, in turn, obtained them through the courtesy of Mr. Nathan D. Golden of the Department of Commerce in Washington, D. C., and his friend, the scientist and industrialist, Mr. André Debrie of Paris, France.—The Editor.

THE reaction of a current-carrying conductor upon its twin—the basis of all electric motors—seems axiomatic to us. But the discovery and ensuing discussion of this and associated phenomena opened the gates to a new technological era and sparked a veritable explosion of the electrical science. These years in the second decade of the nineteenth century witnessed many great and important scientific break-throughs in many fields and the establishment of many fundamentals of modern mathematics, physics and chemistry. Perhaps it was the newly won freedom of the mind which was one of the results of the American and French Revolutions; perhaps it was an accumulation of scientific experience which decades of war had repressed and which peace had released; perhaps, also, it was the good fortune by which a number of great scientists appeared simultaneously on the scene; the fact remains that these were years of startling scientific progress.

The French Academy of Sciences

One of the focal points of this activity, particulary in the field of electricity, was the austere assembly of the French Academy of Sciences in Paris. Before that assembly, the most illustrious of French scientists reported their findings and debated their theories. Summaries of their remarks were entered into the minutes and served as reference for further debate. There was much lively communication between scientists inside and outside France and there were numerous scientific publications which printed papers submitted to them and which served as a forum for the public debate of theories and experimental evidence.

It is fortunate that much of the writing of that time has been preserved for posterity and that much of it is now available in compact form through the painstaking care of the French Society of Physics (Société Française de Physique), which collected even the personal correspondence between such men as Ampère and Faraday and others, and published a comprehensive collection of all pertinent material.[1]

Oersted's Discovery

The spark which set off the explosion in the electrical science was not aimed directly at the Academy. It was a Latin language pamphlet on an electrical discovery which was published in the City of Copenhagen, Denmark, under the title "Experimenta Circa Effectum Conflictūs Electrici in Acum Magneticam" (Experiments About the Effect of the Electrical Conflict[2] Upon the Magnetized Needle). Translations of this paper were published in the French magazines "Annales de Chimie et de Physique" and "Journal de Physique." The author was H. C. Oersted, Professor of Physics at the University of Copenhagen and Secretary of the Royal Danish Society of Sciences. The date of publication was July 21, 1820. Less than two months later, on September 18, Mr. André-Marie Ampère reported about it and about his own findings to the Academy and this was the start of one of the significant periods in the history of progress in the field of electricity.

The roster of those who directly or from a distance participated in the ensuing debate on what Oersted and Ampère had discovered, reads like an index to a physics textbook —Arago, Delambre, Humphrey Davy, Fresnel, Biot, Savart, Laplace, De la Rive, Faraday, Gay-Lussac, Pouillet, and others. Hardly had one of them reported on experimental evidence of his own, when others attempted theoretical explanations and suggested additional experimentation which, in turn, led to further reports, debates and criticism by this highly competent group. They corresponded with each other, quoted each other, sometimes politely refuted one another, but generously shared their experiences with the rest.

The stage had been set by Volta, whose electrolytic battery, derived from Galvani's observations on the effects of metals in contact with the limbs of freshly killed frogs, provided a source of electricity better suited to controlled experimentation than the frictional electric charge accumulated in a Leyden jar. Oersted had experimented with a Volta source and discovered that "the magnetized needle is deflected

[1] Collections de Mémoires relatifs à la Physique (Gauthier-Villars, Paris, 1885/87; the volumes dealing particularly with Ampère's work are entitled, "Mémoires sur l'Électrodynamique," Vols. II & III.)

[2] Meaning, "Action" or, more broadly, "Reaction."

Illustration Courtesy Ohmite Mfg. Co.

Andre-Marie Ampère (1775-1836), brilliant French physicist, inspired by the experiments of Oersted, created a new branch of physics—electrodynamics.

from its position of equilibrium by the action of the galvanic apparatus and that this effect takes place when the circuit is continuous and not when the circuit is interrupted." He had also observed the direction of the motion of the compass needle in relation to the polarity of the source of electricity and had summed up his findings, stating that if a "straight portion of a wire is arranged horizontally above the needle and parallel to its direction, . . . the pole nearest the negative terminal of the galvanic apparatus will deviate toward the west; but when the wire is placed horizontally below the needle, the effects are in the opposite direction." For a wire stretched at right angles to the plane of rotation of the compass needle, Oersted's original text has this to say:

"Quando filum conjungens perpendiculare ponitur a regione polo acūs magneticae, et extremitas superior fili electricitatem a termino negativo apparatūs galvanici accipit, polus orientem versus movetur. Posito autem filo (cujus extremitas superior electricitatem a termino negativo accipit) e regione puncto inter polum et medium acūs situ, occidentem versus agitur."

[If the connecting wire is placed vertically opposite one of the poles of the magnetized needle and the upper portion of the wire accepts electricity from the negative terminal of the galvanic apparatus, the pole is moved toward the east. However, if the wire (whose upper portion accepts electricity from the negative terminal) is placed opposite a point between one of the poles and the center of the needle, it is moved toward the west.]

Ampère Reports to Academy

In a number of meetings of the French Academy of Sciences on September 18-25, October 9-16 and 30, and on November 6, 1820, Ampère took the floor and reported at great length about experiments which he had made in consequence of his occupation with Oersted's discovery. In these sessions he discussed the qualitative aspects and experimental refinements of his work. Later, beginning with a session on December 4, 1820, Ampère began a discussion of the quantitative aspects of his experimental results and provoked two years of heated debate and rebuttal which ended only with Ampère's admission of some early errors.

Nothing, of course, should detract from the profound and fundamental importance of Ampère's discovery and from his contribution to science, even though he was not always right.

Tension and Current

In the sessions of the Academy in September, October and November, 1820, Ampère first defined the differences between those two types of electrical action which we would designate as electrostatics and electrodynamics. Only electrostatic effects were then known and understood by Ampère's contemporaries until Oersted published his findings and demonstrated some of the effects of electricity in motion. These were Ampère's introductory remarks:

"The electromotive action manifests itself in form of two effects which I believe I must distinguish from the beginning by a precise definition. I will call the first of these 'electric tension' and the second 'electric current.'"

He then goes on to explain how electric tension can be observed, for instance, by the attraction of light objects or the action of the electroscope. He contends that electric tension will exist only in a system in which conductors are separated from each other by insulators. He mistakenly holds that this electric tension completely disappears the moment the conductors are connected with each other; but he correctly describes some of the effects which then begin to take place, such as the decomposition of water or, as discovered by Mr. Oersted, the deflection of the compass needle.

Ampère struggles with these new concepts and pictures the "electromotive action" as that of two electric fluids, one positive and one negative, which travel through a circuit in directions opposite to each other, emanating at a point where they are separated electrolytically and ending in another part of the circuit where they recombine with each other and the process terminates.

"In this fashion there results a double current, one of positive, the other one of negative electricity, leaving in opposite directions from the points where the electromotive action

takes place and coming to reunite in the part of the circuit opposite these points. The currents of which I speak continue to accelerate until the inertia of the electric fluids and the resistance which they encounter, in view of the imperfection of even the best conductors, balance the electromotive force; after which they continue indefinitely at a constant speed such that this force preserves the same intensity. However, they stop at the very moment the circuit is interrupted. It is this state of electricity in a series of electromotive and conductive substances which I will briefly call electric current; and as I will continuously be compelled to talk about two opposed directions according to those in which the two electricities move, I propose that each time the subject comes up and in order to avoid repetition, I will describe the direction of the electric current by referring to that of the positive electricity. Talking about [the conditions within] a voltaic pile, the expression 'the direction of electric current in the pile' will mean the direction from the place where hydrogen is liberated in the decomposition of water toward the place where oxygen is obtained. Correspondingly, the direction of the electric current in the [external] conductor . . . will be designated as the one from the terminal where oxygen is generated toward that where hydrogen develops. In order to embrace these two cases in one definition, one may say that the direction of the electric current is that which follows the hydrogen . . ."

Here, apparently, is the source of the difficulty which still confounds students of electricity who must learn that the electronic flow of current is opposite to the direction of the flow of electricity as suggested by the conventional symbols of polarity. Be that as it may, it was necessary in Ampère's day, as it is now, to agree on the direction of current flow in relation to the electrical terms of polarity and the poles of a magnet, so that all concerned can use an identical frame of reference, regardless of whether it be in agreement or disagreement with other theories.

It is fortunate, therefore, that Ampère became bored with the repetitious reference to the two opposing fluids of his electrical theory and decided on a single definition of current direction.

Great effort and much repetitive argumentation are used by Ampère to drive home to his listeners the difference between tension and current and the experimental evidence which then existed in support of these concepts. In all this discussion, however, Ampère still contends that the electroscope will cease to deflect once current is allowed to flow, just as the compass needle is not deflected by "electric tension" alone. This was still seven years before Ohm correctly described the relationships between current and tension and admitted the simultaneous existence of both in the same circuit. The causal relationship between the two was certainly not clear to Ampère.

Current Measurement

While still on the subject of Oersted's discovery, Ampère mentions the value which the interaction of current and the compass needle would have for the purpose of electrical measurement. "The ordinary electrometer indicates the presence of a tension and the intensity of that tension. What has been missing is an instrument which makes known the presence of the electric current in a pile[3] or a conductor, and which indicates its strength and direction. That instrument now exists."

He goes to great length describing how to use the compass needle as what we might call a polarized iron vane type ammeter. However, in this he was not original. He did not know that a man named Schweigger had given a lecture on September 13, 1820,[4] (thus five days before Ampère's first talk before the Academy), in which he had described the compass needle as a current indicator and where he had even pointed out that one could wind the wire which connects the positive with the negative pole of the galvanic apparatus, so that it encircled the compass needle, whereupon "the needle became as sensitive to the action of a simple pile as the muscle of a frog." This came to be known as Schweigger's "multiplier" and appears to have been the first use of a coil or winding for the purpose of producing an increased or "multiplied" electromagnetic effect.

Ampère's Discovery

It is only after his elaborate description of the differences between tension and current that Ampère makes the statement that "the differences of which I have spoken are not the only ones which distinguish these two states of electricity." This, then, brings him to his own discovery:

"I have discovered even more remarkable differences by arranging in parallel directions, two straight portions of two conductors which connect the terminals of two piles. One was fixed and the other was suspended on pivots and was made very mobile by a counterweight and the two could approach each other or move apart and yet preserve their parallelism. I have observed that when simultaneously an electric current was passed through each of these, they mutually attracted

[3] Pile is the term frequently used by Ampère and his contemporaries for the electrolytic current source devised by Volta, which we call a battery.

[4] Allgemeine Litteraturzeitung, No. 296, November, 1820. This report probably remained unknown in France until Oersted reported about Schweigger's work in Annales de Chimie et de Physique, Vol. XXII, 1823, pp. 358-380.

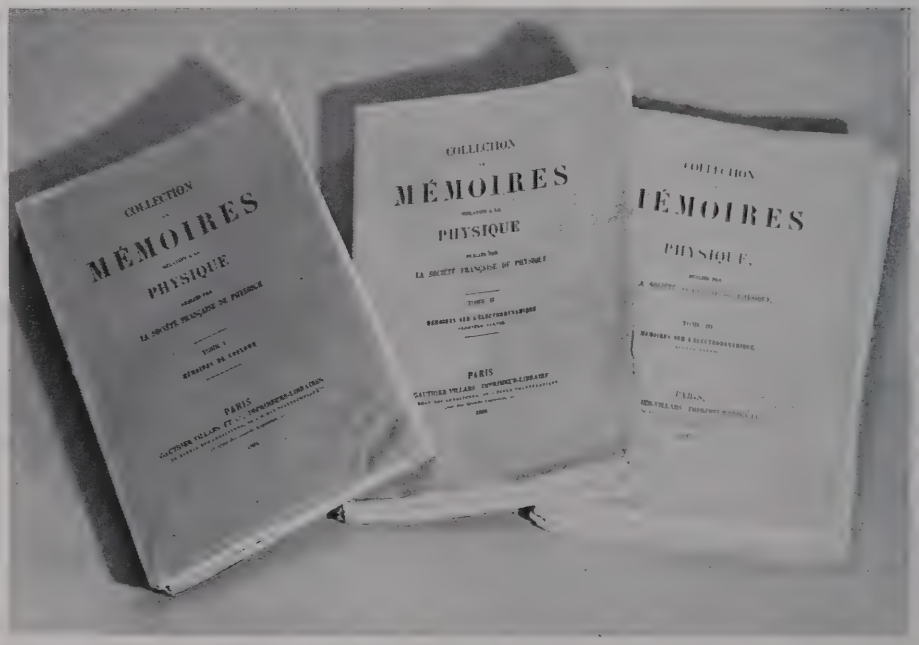

Books in which the work of Ampère and his contemporaries is preserved.

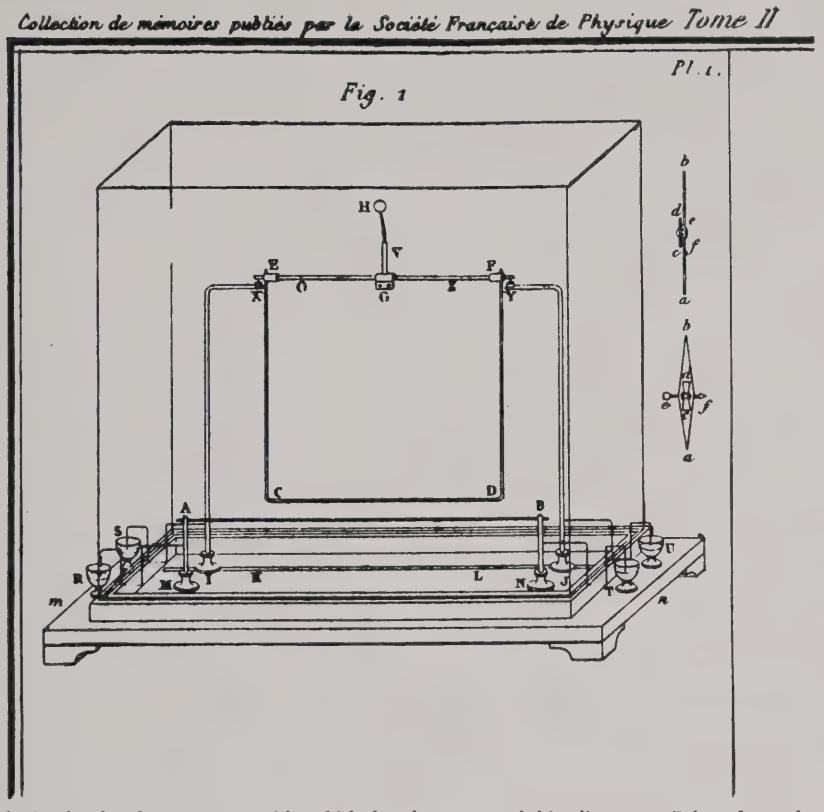

Ampère's sketch of apparatus with which he demonstrated his discovery. Taken from the collection of Ampère's papers by the French Society of Physics.

each other when the two currents were in the same direction and that they repelled each other when the currents flowed in opposite directions.

"Now these attractions and repulsions of electric currents differ basically from those which the electricity produces in the state of rest. First of all, they cease, just like the chemical decomposition, the moment the circuit of conductive substances is interrupted. Secondly, in the ordinary electric attractions and repulsions, it is electricities of opposite kind which attract each other while those of the same kind repel each other. In the attractions and repulsions of electric currents, the exact opposite takes place. When the two conducting wires are placed parallel to each other, so that the ends of the same name find themselves on the same side and very close to one another, there is attraction; yet there is repulsion when the same conductors, still parallel, carry currents in opposite directions so that the ends of the same name find themselves at the greatest possible distance from each other. Thirdly, in the case where there is attraction so strong as to cause the movable conductor to come in contact with the fixed conductor, the two remain attached to one another like two magnets, and will not immediately separate from each other as it happens when two conducting objects touch each other after attracting each other because they are electrified, the one positively and the other one negatively."

So far, Ampère's observations are completely correct and confirmed by all that has been learned since. However, at this point, and occasionally at other points, Ampère draws conclusions beyond experimental proof and gets to be carried away by his imagination. This is what he says: "Finally, the two electric currents attract or repel each other in a void just as in air which is . . . contrary to what is observed of the mutual action of two conducting objects which are electrified in the ordinary manner." Apparently, Mr. Ampère believed that electrostatic attraction did not occur in a vacuum.

Starting from his basic discovery of the attraction and repulsion of two current-carrying conductors, Ampère then pushes forward into this new and fascinating field.

"I had originally thought that it would be necessary to establish the electric currents in the two conductors by means of two different piles. However, this is not necessary. It is sufficient if the conductors form part of the same circuit . . . One must conclude from this observation that the electric tensions of the two terminals of the pile do not enter into these phenomena because there certainly is no tension in the rest of the circuit. This is further confirmed by the possibility of causing the magnetized needle to deflect at a considerable distance from the pile by the use of a very long conductor which is bent back at its mid-point and placed in the direction of the magnetic meridian and so that it passes above or below the needle. This effect was suggested to me by the illustrious scientist, Mr. de Laplace . . ."

It is obvious that Ampère wants to guard himself against any possible suspicion that the new effect which he had discovered might be no more than a different form of electrostatic attraction or repulsion. It is largely for this reason that he repeatedly denies the existence of "tension" as soon as current flows in a circuit.

Ampère's Telegraph

Despite his preoccupation with purely theoretical matters, Ampère shows good practical sense when talking about possible uses for what he has discovered.

"With as many wires and magnetized needles as there are letters, and by placing each letter on a different needle one could, with the aid of a pile placed at a distance from the needles, . . . create a sort of telegraph with which to write all the details which one might wish to transmit, across whatever obstacles there might be, to a person instructed to observe the letters placed on the needles. By setting up on the pile a keyboard whose keys carry the same letters and would make the connections when depressed, this means of communication would function with great facility and the time to operate it would be merely the time necessary to touch a letter on one side and to read it on the other."

Some twenty years later, Gauss and Weber actually developed an electromagnetic telegraph.

Controversy About Magnetism

As a result of these preliminary observations, Ampère then engages in extremely involved speculations on the nature of magnetism. His experiments prove that the behavior of a current-carrying conductor of appropriate shape will duplicate that of a bar magnet. For instance, Ampère suspends a glass rod so that it can rotate in the manner of a compass needle, but places upon it a wire wound in the shape of a helix. Very elaborate and clever means are used to conduct current into and out of the helix via mercury cups arranged in such a manner that the rotation of the rod is not impeded. The action of this device with respect to another magnet or another current-carrying conductor, or even with respect to the magnetic field of the earth, is found to be exactly like that of a magnetized needle. Consequently, Ampère advances the theory that ferromagnetism is brought about by minute circular

currents which, no matter how created, continuously flow within the molecules of iron and which, in the process of magnetization, are so oriented as to bring about the magnetic behavior of the material.

In this, Ampère differs from Biot and others who regard magnetism, no matter what might be its nature, as the total effect of innumerable small "elementary" magnet bars. Ampère makes great efforts to show that the magnetic forces which stem from his assumed elementary currents are numerically and geometrically identical to the forces ascribed to Biot's elementary magnets. To prove his point, Ampère sets out to compute the force between an infinitely small current element in one conductor and a neighboring current in a conductor of infinite length. The purpose of this approach is to derive, by integration over a finite length of the first of these conductors, the force between any two conductors of finite length. In this derivation, Ampère takes recourse to some simplifying assumptions only to find that the resultant theory is not in agreement with experimental evidence. A great debate ensues until 1822, while Biot and others are suggesting more complete mathematical solutions. Even in the end, there still remained the difficulty of proving the identity of Ampère's and Biot's laws with those pronounced by Coulomb.[5] Not until about 20 years later did Gauss and Weber furnish proof of the compatibility of these various theories and offered precise constants for the relationship between current and force.

Electromagnetic Induction

In 1822, Ampère visited Geneva where there was an excellent physics institute and where he hoped to refine some of his previous experiments. He was accorded great courtesy and was permitted to use the facilities of the institute to any extent he wished. It is interesting to note that in the ensuing experimentation, Ampère came close to demonstrating the principle of electrical induction. He suspended a closed circular loop of wire on pivots within a fixed winding and placed magnets on fixed supports so that poles of opposite signs faced the movable winding at points of greatest distance from the axis of rotation. In his report we read:

". . . the experiment had as its objective to determine whether it is possible to produce an electric current through the influence of another current. . . . I have succeeded with [the] apparatus by employing the excellent horseshoe magnet of the museum in Geneva which Professor Pictet had procured for me."

Ampère had indeed succeeded in causing the electrically isolated movable coil to deflect under the "influence" of current in the fixed coil. But, strange as it may seem, —he did not pursue the matter. He never discovered that the "influence" he had witnessed was not continuous. There is no mention of this experiment in Ampère's correspondence with Faraday; but it was Faraday, rather than Ampère, who described and proved the correct derivative relationship between primary current and induced voltage. Ampère seemed to have been blinded by the fixation that his task was exclusively that of explaining the nature of magnetism.

Magnificent Failure

This was the great tragedy of Ampère's work: He wished to reconcile his theory of magnetism with those of Coulomb and Biot and the basic gravitational laws of Newton in search of the one all-embracing law of an electromagnetic universe which, he believed, existed. This was a magnificent vision but it winged its way up into the realm of speculation and Ampère did not succeed in bringing it down to earth. In seeking the unattainable, he failed to see the practical significance of his discovery.

In a monumental résumé of his papers to the Academy from 1820 to 1825, Ampère finally reiterated his entire electrodynamic creed. This paper, entitled "Report on the Mathematical Theory of Electrodynamic Phenomena, Exclusively Deduced From Experience", fills nearly 200 printed pages. Yet, despite its tremendous mathematical detail, it fails completely to reduce the laws of electromagnetism to practical form.

In substantiation of his original discoveries and subsequent theories, Ampère devised a profusion of extremely clever apparatus, yet he never measured the forces between current-carrying conductors against known, independent standards. He set up a great number of situations where the forces between conductors balanced each other and from these observations he drew ingenious geometric and trigonometric conclusions. Many times he admitted the absence of results as positive proof and yet, by a series of such negative observations, he arrived logically at perfectly sound conclusions. But these were all unrelated to any existing system of absolute measurement.

No one described these failings better than the man who later brought Ampère's work to fruition and who constructed one of the first electrodynamometer type instruments with which he made precise measurements of the forces of attraction or repulsion which had eluded Ampère. This man was Wilhelm Weber. In his famous paper, "Electrodynamic Measurements" (Elektrodynamische Massbestimmungen, Weidmann'sche Buchhandlung, Leipzig, 1846), Weber has this to say:

"Ampère's classical paper is only in a minor part devoted to the phenomena and the laws of the reciprocal effects of conducting wires; the greatest part is devoted to the development of his ideas on magnetism . . . The fact of the mutual attraction of two conductors was verified [by him] time and time again and is beyond any doubt; but the verifications have always been made under such conditions and by such means that no quantitative measurement was possible . . . More than once, Ampère drew conclusions from the absence of electrodynamic action as if a measurement had given him a result equal to zero; . . . but these negative experiments . . . do not have . . . the full value . . . of the latter . . ."

So it happened that Ampère's crucial discovery and the ingenuity of his experimental and mathematical demonstrations were to have their decisive effects upon the electrical age only through the work of others. Nevertheless, his findings of the motor reaction of one electric current upon another have been given their deserved recognition: his name has been immortalized by its use for the unit of electric current.

[5] Coulomb described the force between magnets, Biot (after Ampère's fundamental discovery) that between magnet and current-carrying conductor, and Ampère that between two current-carrying conductors.

E. N.—No. 128 —*H. Berring.*

Printed in U. S. A.

Weston ENGINEERING NOTES

VOLUME 9 MARCH 1954 NUMBER 1

In This Issue

Model 905
A-C and D-C Portable Wattmeters

Thermal Problems Relating to Measuring and Control Devices — Part X

Miniature Recorder Used in Red Cross Blood Program

"Westonia"

John Parker, Editor
T. A. Connors, Technical Editor

Copyright 1954,
Weston Electrical Inst. Corp.

WESTON ELECTRICAL INSTRUMENT CORP.,
614 Frelinghuysen Avenue,
Newark 5, N. J., U. S. A.

MODEL 905 A-C AND D-C PORTABLE WATTMETERS

THE Model 905 Wattmeter is the latest addition to the matched group of portable instruments consisting of the Model 901 D-C Voltmeter, Ammeter and Milliammeter, and the Model 904 Iron Vane A-C Voltmeter, Ammeter and Milliammeter. A picture of the Model 905 Wattmeter is shown in Figure 1.

Figure 1—Model 905.

The Model 905 is a single element electrodynamometer wattmeter designed for general testing where accuracy and readability are desired. Like its matched companion instruments, it has a rated accuracy of 0.5 per cent of full scale value. The instrument features a 5.5-inch-long hand calibrated mirror scale, and a curved shadow-reducing wide-angle window which admits light from both sides to afford maximum scale visibility. The case is ribbed, and molded of bakelite. The window is a clear non-breakable plastic especially treated to eliminate electrostatic effects.

Figure 2 shows the mechanism removed from its magnetic shield. One field coil has been removed for a clearer view of the moving coil and the other field coil.

The instrument was designed to more than meet the requirements of the American Standards Association Specification C39.1-1951 for instruments of the 0.5 per cent rated accuracy class. A comparison of many of the requirements of this specification with the data from a typical Model 905 Wattmeter is shown in Table I. It should be noted that in nearly all cases the Model 905 characteristics are better than would be necessary merely to meet the requirements of the ASA specification.

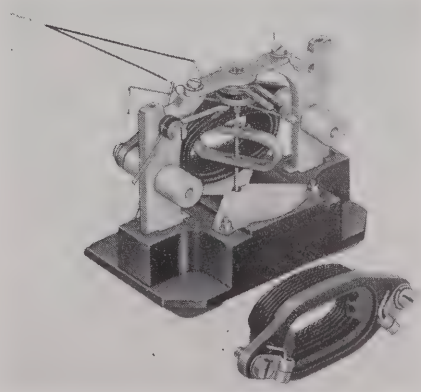

Figure 2—Model 905 mechanism with one field coil removed.

EDITOR'S NOTE: *Although not a mathematical or scientific analysis such as we prefer for* WESTON ENGINEERING NOTES, *the technical description of the new Model 905 Wattmeter appears to be worthy of publication here as information for the practicing engineer.*

TABLE I—COMPARISON OF ASA REQUIREMENTS

Item	*ASA Requirements*	*Model 905*
Rated accuracy, per cent of full scale	0.5	0.5
Scale length, minimum	3.2″	5.5″
Damping factor, minimum	5	10
Response time, maximum	5 sec	2.5 sec
Loss, maximum:		
Potential circuit at 120 v, 60 c	5 va	3 va
Current circuit at 5 a, 60 c	2 va	0.83 va
External temperature influence, maximum	0.5%	0.25%
Sustained operation influence, maximum	0.6%	0.2%
External field influence, maximum	2.0%	1.3%
Frequency influence, maximum, 54-66 c	0.2%	Not Readable
d-c to 100 c	—	0.2%
Voltage influence, maximum, ±10% change	0.2%	Not Readable
Power factor influence, maximum	0.5%	0.15%

A general statement as to the electrical characteristics of the Model 905 might be that the instrument has a well damped, fast acting moving system with low losses and is well compensated for influences such as those due to wide changes in temperature, sustained high load operation, heavy external magnetic fields, and variations in frequency, voltage and power factor.

The Model 905 Wattmeter has a small sustained operation influence as compared to the value of 0.6 per cent allowed by the ASA specification. This has been achieved by means of an efficiently designed mechanism that requires very little power in both the field and moving coils for its operation. In addition, the series resistance is mounted in a compartment completely isolated from the mechanism so that the heat from the series resistance has very little effect upon the operation of the instrument.

The ASA specification states that the frequency influence shall be taken over 54 to 66 cycles and shall not exceed 0.2 per cent of full scale value. Actually, the frequency influence between d-c and 100 cycles and at any power factor between unity and 50 per cent does not exceed 0.2 per cent of full scale value on the Model 905. At 400 cycles, the error is less than 0.5 per cent of full scale value at any power factor between unity and 0.55 on the 150-volt range, and 0.70 on the 300-volt range.

While the standard cataloged instruments are designed for use at d-c and 25-125 cycles, the instruments can also be supplied frequency compensated for d-c and 25-1,000 cycles, with a frequency influence of less than 0.25 per cent of full scale value over the entire frequency range and from unity to 50 per cent power factor.

The voltage influence in the ASA specification is limited to a test of ±10 per cent variation from the nominal voltage rating, and an error of 0.2 per cent of full scale is allowed. The Model 905 Wattmeter is an air core electrodynamometer, and as such the voltage influence is negligible for any value up to its maximum rating. In other words, the potential circuit can be used at any voltage provided the maximum ratings in potential and current are not exceeded in their respective circuits.

The ASA specification permits a power factor error of 0.5 per cent over a range of unity to 0.5 power factor. The Model 905 Wattmeter can be used at any power factor from zero to unity with an error due to power factor of less than 0.2 per cent at 60 cycles. Both the power factor and frequency influence are kept small by an efficient design of moving and field coils and by keeping eddy currents to a minimum in the mechanism parts.

The standard instrument is designed to provide an overload rating of 100 per cent on the current circuits and 50 per cent on the potential circuits based on the nominal voltage and current rating. These overload features can be utilized when taking measurements on low power factor circuits and full scale deflection can be obtained at 50 per cent power factor. At lower power factor, such as 10 to 20 per cent, the instrument can be supplied specially adjusted so that full scale deflection will be obtained at 25 per cent power factor.

The instrument is normally supplied with two potential ranges and one or two current ranges. The voltage is limited to self-contained ranges up to 300 volts maximum, with higher ranges supplied in an external multiplier. The maximum self-contained current range is 50 amperes.

The Model 905 Wattmeter can also be supplied with a sturdy leather case for greater protection of the instrument, which was particularly designed for field work, utility service trucks, factory maintenance, and similar work where protection of the instrument is desirable. This case is designed in such a fashion that all electrical connections can be made to the instrument without removing the instrument from the case. In addition, the front flap, which covers the dial window, can be unsnapped and bent back so that the instrument dial is exposed. This feature permits complete use of the instrument in its carrying case. The wattmeter in its carrying case is shown in Figure 3.

Figure 3—Weston Model 905 Wattmeter in carrying case.

In summary, the Model 905 Wattmeter is an accurate, easily read, long scale instrument which more than meets the requirements of the ASA Specification 39.1-1951. It is suitable for laboratory, shop and field work and, where greater protection is desired, it can be supplied with a leather case which need not be removed when using the instrument.

E. N.—No. 99 —*R. F. Estoppey.*

THERMAL PROBLEMS RELATING TO MEASURING AND CONTROL DEVICES—PART X

Temperature Distribution in a Circular Disk or Sector Under Given Conditions of Heating and Cooling

Introduction

IN PREVIOUS chapters, the temperature distribution in uniform conducting strips connected between terminals was considered. In that case, the lines of heat flow are parallel whereas in the circular disk now under consideration they are radial.

In some applications of thermometry, a circular disk is used for the thermometer element, mounted on a surface such as the outer surface of aircraft, to measure surface or outside temperature. Such a disk may also be used as a radiation meter to measure radiant power incident upon it.

The following analysis is for the purpose of determining the temperature distribution in a disk under given conditions.

32. DETERMINE THE TEMPERATURE AT ANY PART OF A CIRCULAR DISK OR SECTOR HEATED UNIFORMLY AT A CONSTANT RATE, WHICH EXCHANGES HEAT BY CONVECTION WITH THE SURROUNDING MEDIUM AND BY CONDUCTION TO A HEAT-ABSORBING CONDUCTOR CONNECTED TO ITS RIM.

Figure 30 illustrates such a disk. To make the analysis more general, consider a sector as shown having an angle ϕ. The heat may be applied, for example, by radiant energy.

Let w = rate of application of heat to the surface per unit area; watts/cm.^{2}
h = rate of exchange of heat with the surrounding medium per unit area and per degree temperature; watts/cm.^{2}/deg. C.
k = thermal conductivity of disk material; watts cm./deg. C.
θ = temperature above ambient at any radius x.
R = radius of disk in centimeters.
b = thickness of disk in centimeters.
T_o = temperature of heat-absorbing ring above ambient.
$\theta_o = w/h$ is the temperature above ambient which would result if all heat were dissipated by convection and none by conduction to the rim.

Then, as will be shown later, the temperature at any part of the disk above ambient is

$$\theta = \frac{w}{h}\left[1 - \frac{I_o(x\sqrt{h/(kb)})}{I_o(R\sqrt{h/(kb)})}\right] + T_o\left[\frac{I_o(x\sqrt{h/(kb)})}{I_o(R\sqrt{h/(kb)})}\right] \quad (203)$$

where $I_o(x\sqrt{h/(kb)})$ etc. are modified Bessel functions of zero order and the first kind. Some tables give values of $J_o(iz)$ which is the same as $I_o(z)$, where $i = \sqrt{-1}$.

It is also shown that the temperature distribution is independent of the angle ϕ of the sector, so that the temperature distribution is the same for the entire disk as for any sector of it.

These Bessel functions may be found in tables readily available.[1] However, if one wishes to compute them, they may be obtained by the use of the following series:

$$I_o(z) = 1 + (z/2)^2 + \frac{(z/2)^4}{(2!)^2} + \frac{(z/2)^6}{(3!)^2} + \frac{(z/2)^8}{(4!)^2} + - - \quad (204)$$

in which for the present case, $z = x\sqrt{h/(kb)}\Big]_{x=0 \text{ to } R}$

If z is so large that Equation (204) becomes unwieldy, the following asymptotic series may be used to a close approximation.

$$I_o(z) \approx \frac{\epsilon^2}{\sqrt{2\pi z}}\left[1 + \frac{1^2}{1!(8x)} + \frac{1^2 \times 3^2}{2!(8x)^2} + - -\right] \quad (205)$$

where ϵ = basis of natural logarithms.

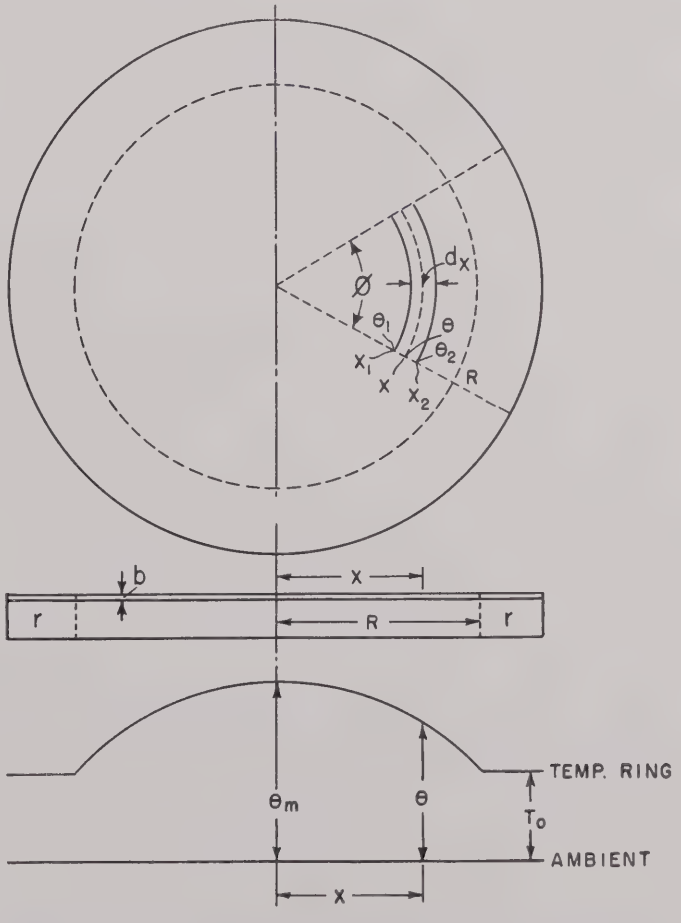

Figure 30—Circular disk thermally connected at its rim to a heat-absorbing ring r. The diagram below the disk illustrates the distribution of temperature.

32(a). Temperature at Center.

In practical cases it is usually desired to know the temperature at the center of the disk above ambient. To determine this, set $x=0$ in Equation (203) and we have the temperature at the center.

$$\theta_m=\frac{w}{h}\left[1-\frac{1}{I_o(R\sqrt{h/(kb)})}\right]+\frac{T_o}{I_o(R\sqrt{h/(kb)})} \quad (206)$$

This equation is similar in form to Equation (186) given in Section 25(a), Part IX, for a uniform conductor connected between terminals, namely

$$\theta_m=\theta_o\left[1-\frac{1}{\cosh\left(\frac{L}{2}u\right)}\right]+\frac{T_o}{\cosh\left(\frac{L}{2}u\right)}$$

in which $\theta_o=w/h$, $L/2$ corresponds to R, $u=\sqrt{h/(kb)}$, and the terminals have the same temperature T_o.

The curves in Figure 31 give the ratios of the temperature θ_m above ambient at the center of the disk, to the temperature above ambient, $\theta_o=w/h$, which would result if all the heat were dissipated by convection and none by conduction to the rim, as a function of $R\sqrt{h/(kb)}$. For a comparison, a similar curve is given for a uniform conductor connected between terminals, as a function of $\frac{L}{2}\sqrt{h/(kb)}$. For these curves, it is assumed that the rim and terminals are at ambient temperature, that is, $T_o=0$. These curves show that the temperatures in the disk are lower than in the strip for the same conditions.

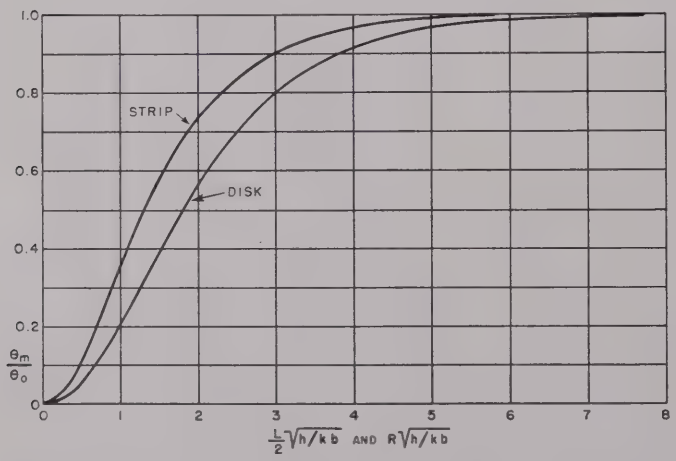

Figure 31—Ratio, θ_m/θ_o, of the temperature, θ_m, above ambient at the center of the disk heated uniformly at a constant rate and cooled by convection and conduction, to the temperature above ambient $\theta_o=w/h$ which would result if all the heat were dissipated by convection and none by conduction, as a function of $R\sqrt{h/(kb)}$. A similar curve is shown for a uniform conductor connected between terminals for comparison, as a function of $\frac{L}{2}\sqrt{h/(kb)}$. In these curves, it is assumed that ring and terminals are at ambient temperature, $T_o=0$.

32(b). The Case Where No Heat Is Added From an External Source.

Under this condition, $w=0$, and from Equation (203), the temperature above ambient at the center of the disk becomes

$$\theta_m=\frac{T_o}{I_o(R\sqrt{h/(kb)})} \quad (207)$$

This shows that in general, when no heat is applied, the disk does not have the same temperature as the medium, which will cause an error when it is to be used as a thermometer, since it is affected by the temperature of the rim. In fact, Equation (207) is the error resulting if the disk is used as a thermometer element.

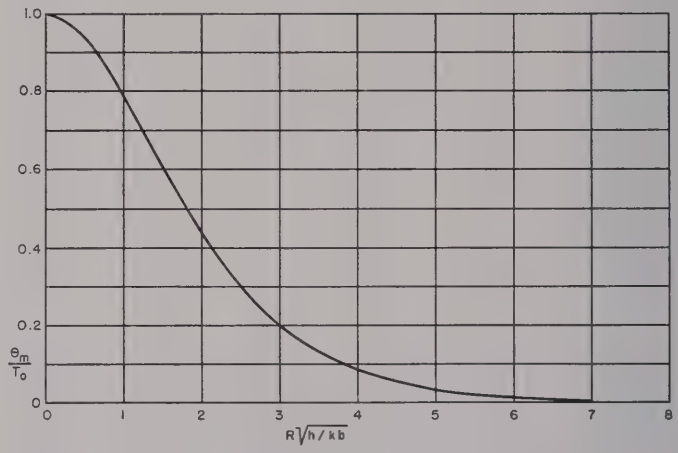

Figure 32—Ratio, θ_m/T_o, of the temperature, θ_m, above ambient at the center of a circular disk exchanging heat with the surrounding medium when no heat is added from an external source, to the temperature above ambient of the rim, T_o, as a function of $R\sqrt{h/(kb)}$.

Figure 32 gives the ratio θ_m/T_o, of this deviation in temperature, θ_m, at the center of the disk from the ambient temperature, to the temperature of the rim, T_o, above ambient, as a function of the parameter $R\sqrt{h/(kb)}$. For example, if the temperature of the rim is 10 degrees above ambient, and it is required that the error shall not exceed one degree at the center of the disk, then the curve shows that for a value of $\theta_m/T_o=0.1$, the disk must be so designed that $R\sqrt{h/(kb)}$ exceeds 3.8. To accomplish this, many kinds of metals and non-metals are available.

32(c). The Case Where the Heat Exchanged With the Medium Is Negligible Relative to That Conducted to the Rim.

Under this condition, h becomes zero and Equation (203) assumes the indeterminate form

$$\theta=\frac{0}{0}+T_o, \text{ since } I_o(z)\Big]_{(z=0)}=1$$

To evaluate this, Equation (203) may be written

$$\theta=\frac{w}{h}\left[\frac{I_o(R\sqrt{h/(kb)})-I_o(x\sqrt{h/(kb)})}{I_o(R\sqrt{h/(kb)})}\right]+T_o \quad (208)$$

now when h becomes very small, approaching zero, we may write the Bessel functions as a series in which all values higher than the squares are negligible. Then from Equation (204), Equation (208) becomes

$$\theta\Big]_{h\to 0} = \frac{w}{h}\left[\frac{1+\frac{1}{4}\frac{R^2h}{kb}-1-\frac{1}{4}\frac{x^2h}{kb}}{1}\right]+T_o$$

from which

$$\theta\Big]_{h=0} = \frac{w}{4kb}(R^2-x^2)+T_o \tag{209}$$

This result checks with that readily derived by direct analysis for this assumed condition. It shows that the temperatures in the disk above the temperature of the rim are exactly half those in the uniform conductor above its terminals for corresponding positions relative to their centers, when half the strip length $L/2=R$, and when they have the same thickness and thermal constants.

32(d). Case Where the Heat Conducted to the Rim Is Negligible Relative to That Exchanged With the Medium.

Under this condition, either the conductivity k or the thickness b or both may approach zero; in which case we have the Bessel functions with practically an infinite argument.

Now for very large arguments, Equation (205) shows that the Bessel function

$$I_o(z) \approx \frac{\epsilon^z}{\sqrt{2\pi z}} \tag{210}$$

Applying this value to Equation (203), we have

$$\theta\Big]_{k \text{ or } b\to 0} = \frac{w}{h}\left[1-\frac{\epsilon^{x\sqrt{h/(kb)}}}{\epsilon^{R\sqrt{h/(kb)}}}\times\sqrt{\frac{2\pi R\sqrt{h/(kb)}}{2\pi x\sqrt{h/(kb)}}}\right]+0$$

$$= \frac{w}{h}\left[1-\epsilon^{-(R-x)\sqrt{h/(kb)}}\times\sqrt{\frac{R}{x}}\right]$$

Since the second member equals $\epsilon^{-\infty}=0$, except where $x=R$, when k or b approaches zero, then everywhere except at the rim,

$$\theta = \frac{w}{h} \tag{211}$$

This result can also be deduced readily by simple physical reasoning.

32(e). Case Where the Two Sides of the Disk Are in Contact With Two Different Mediums at Different Temperatures.

This may occur, for example, when one side is in contact with air and the other side with water.

Let the two mediums have the actual temperatures T_1 and T_2, that is, not relative to ambient, and convection constants h_1 and h_2 respectively, then, as will be shown later, both sides of the disk may be considered as being in contact with a single fictitious medium having an actual temperature

$$T_a = \frac{h_1T_1+h_2T_2}{h_1+h_2} \tag{212}$$

which, when used as the ambient temperature in the equations given for a single common medium, the resulting equations will be applicable to the condition where two different mediums are used. The convection transfer of heat from both sides per unit area is

$$h = h_1+h_2$$

Therefore if T is the actual temperature at any radius x of the disk and T_r is the actual temperature of the rim, T_r-T_a may be substituted for T_o, and $T-T_a$ for θ in the general Equation (203), and then the temperature at x is

$$T = \left(\frac{w}{h}+T_a\right)\left[1-\frac{I_o(x\sqrt{h/(kb)})}{I_o(R\sqrt{h/(kb)})}\right]+T_r\left[\frac{I_o(x\sqrt{h/(kb)})}{I_o(R\sqrt{h/(kb)})}\right] \tag{213}$$

where $h=h_1+h_2$.

32(f). Example.

As an example of the use of these equations, consider a disk of stainless steel, 6 cm. in diameter and 0.025 cm. thick, connected at its rim to a heavy heat-conducting ring at a temperature above ambient of 10 Centigrade degrees, in still air. Let radiant energy incident upon the disk be absorbed at the rate of 0.1 watt per sq. cm., and let the convection loss from both sides combined be 0.0022 watt per sq. cm. per 1 degree C. Compute the temperature at the center of the disk above ambient.

Then in Equation (206), $R=3.0$ *cm.*, $b=0.025$ *cm.*, $h=0.0022$, $w=0.1$, and the thermal conductivity of the stainless steel used is 0.15. Then the argument of the Bessel function, $R\sqrt{h/(kb)}=3\sqrt{0.0022/(0.15\times 0.025)}=2.295$. From tables of modified Bessel functions of zero order and the first kind, $I_o(2.295)=2.819$.

Then from Equation (206), the temperature at the center above ambient is

$$\theta_m = \frac{0.1}{0.0022}\left(1-\frac{1}{2.819}\right)+\frac{10}{2.819} = 29.3+3.55 = 32.85 \text{ deg. Cent.}$$

33. COMPENSATED THERMOCOUPLE CIRCULAR DISK RADIATION METER.

If a circular disk is used as a device for measuring radiant power, it may be compensated for the effect of rim and ambient temperatures in a manner similar to the method used for a strip connected between terminals, as described in Section 30, Part IX. Instead of a uniform compensating strip as is used for the strip conductor, a circular sector is used for the disk. The rim of the compensating sector is in thermal contact with the heat-absorbing ring but on the opposite side from the disk. Thus, the front face of the disk is unobstructed, and the sector is shielded from the radiation.

The thermal parameter of the compensating sector, $\sqrt{h/(k_1b_1)}$, must be the same as that of the disk, $\sqrt{h/(kb)}$. The disk and compensating sector need not be of the same material or thickness so long as the thermal constants referred to are equal.

The hot junction of the thermocouple is in thermal contact with the center of the disk and its cold junction in contact with the center of the compensating sector, which may be slightly enlarged at this point for good

contact. If desired for reasons of design, a corresponding sector may be extended in one piece to the opposite side of the ring, making the two sectors meet at the center at which an enlargement may be provided for uniting the sectors and for thermocouple contact.

The temperatures above ambient of the center of the disk and of the center of the sector are given by Equations (206) and (207) respectively. The thermocouple measures the difference between these two temperatures, that is

$$\theta = (\theta_m)\ \text{disk} - (\theta_m)\ \text{sector} = \frac{w}{h}\left[1 - \frac{1}{I_o(R\sqrt{h/(kb)})}\right]$$

which is proportional to the radiation power, w, alone, as it is independent of ambient and ring temperatures.

34. DERIVATION OF EQUATIONS (203) AND (212).

Figure 30 illustrates a circular disk connected at its rim to a heat-absorbing ring at a temperature T_o above ambient assumed constant. The diagram below the disk illustrates the temperature distribution.

To make the analysis more general, we will apply it to a sector of the disk having an angle ϕ. Let x_1 and x_2 be two radii at a distance dx apart, and let the temperatures above ambient at these two radii be θ_1 and θ_2, differing by $d\theta$. Then the rate at which heat passes the arc of the sector at radius x_1 is

$$-kbx_1\phi\left(\frac{d\theta_1}{dx_1}\right) \tag{214}$$

and the rate at which heat passes the arc at x_2 is

$$-kbx_2\phi\left(\frac{d\theta_2}{dx_2}\right) \tag{215}$$

Now the rate at which heat is applied to the circular strip dx wide subtended by the angle ϕ is $w\ x\ \phi\ dx$ and the rate at which heat is exchanged between the circular strip and the medium is $h\ \theta\ x\ \phi\ dx$. Therefore the net gain in heat per unit time in this strip is the difference between these two quantities or

$$(w - h\theta)x\phi\ dx \tag{216}$$

This must equal the difference between the two rates (214) and (215) or

$$kb\phi\left[-x_2\left(\frac{d\theta_2}{dx_2}\right) + x_1\left(\frac{d\theta_1}{dx_1}\right)\right] \tag{217}$$

now
$$\frac{d\theta_2}{dx_2} = \frac{d\theta_1}{dx_1} + \frac{d}{dx_1}\left(\frac{d\theta_1}{dx_1}\right)dx_1$$

and
$$x_2 = x_1 + dx$$

Substituting these quantities in the quantity (217), reducing and dropping the sub numbers, and equating it to the quantity (216) we have

$$-kb\left[\frac{d^2\theta}{dx^2} + \frac{1}{x}\frac{d\theta}{dx}\right] = w - h\theta \tag{218}$$

Since the angle ϕ disappears from the equation, it follows that the temperature distribution is independent of the angle of the sector and therefore is the same for the entire disk as for any sector of it. This is also evident by simple reasoning from the symmetry of the figure.

Equation (218) may be written

$$\frac{d^2\theta}{dx^2} + \frac{1}{x}\frac{d\theta}{dx} + \frac{w - h\theta}{kb} = 0 \tag{219}$$

To solve, let
$$\frac{w - h\theta}{kb} = y$$

then
$$\frac{d\theta}{dx} = -\frac{kb}{h}\frac{dy}{dx};\quad \frac{d^2\theta}{dx^2} = -\frac{kb}{h}\frac{d^2y}{dx^2}$$

when these are inserted in Equation (219), we have

$$\frac{d^2y}{dx^2} + \frac{1}{x}\frac{dy}{dx} - \frac{h}{kb}y = 0 \tag{220}$$

for brevity let
$$-h/(kb) = -\alpha^2 = j^2\alpha^2 \tag{221}$$

where
$$j = \sqrt{-1}$$

Then Equation (220) becomes

$$\frac{d^2y}{dx^2} + \frac{1}{x}\frac{dy}{dx} + j^2\alpha^2 y = 0 \tag{222}$$

Again let
$$j\alpha x = z, \tag{223}$$

then
$$\frac{dy}{dx} = j\alpha\frac{dy}{dz},\quad \frac{d^2y}{dx^2} = (j\alpha)^2\frac{d^2y}{dx^2}$$

Substituting these in Equation (222), we have

$$\frac{d^2y}{dz^2} + \frac{1}{z}\frac{dy}{dz} + y = 0 \tag{224}$$

This is a Bessel equation, the solution of which is

$$y = A_1J_o(z) + B_1Y_o(z) \tag{225}$$

in which $J_o(z)$ and $Y_o(z)$ are Bessel functions of the first and second kinds, respectively, of zero order, and A_1 and B_1 are constants of integration.

Inserting the value of z from Equation (223), we have

$$y = A_1J_o(j\alpha x) + B_1Y_o(j\alpha x) \tag{226}$$

which may be written as

$$y = A_1I_o(\alpha x) + B_1K_o(\alpha x) \tag{227}$$

where $I_o(\alpha z) = J_o(j\alpha x)$ and $K_o(\alpha x) = Y_o(j\alpha x)$ are modified Bessel functions of the first and second kinds, respectively, of zero order.

To determine constants A_1 and B_1; when $x = 0$, $K_o(\alpha x) = -\infty$. Since θ must be finite, B_1 must be zero, and Equation (227) becomes

$$y = A_1I_o(\alpha x) \tag{228}$$

Substituting the value of y in Equation (228), we obtain

$$\frac{w - h\theta}{kb} = A_1I_o(\alpha x) \tag{229}$$

Now when $x = R$, $\theta = T_o$, which when substituted in Equation (229) and solving for A_1 give

$$A_1=\frac{w-hT_o}{kbI_o(\alpha R)}$$

Substituting this in Equation (229); inserting the value for α; and solving for θ, we have

$$\theta=\frac{w}{h}\left[1-\frac{I_o(x\sqrt{h/(kb)})}{I_o(R\sqrt{h/(kb)})}\right]+T_o\left[\frac{I_o(x\sqrt{h/(kb)})}{I_o(R\sqrt{h/(kb)})}\right],$$

which is Equation (203).

34(a). When the Two Sides of the Disk Are in Contact With Two Different Mediums at Different Temperatures.

Let the actual temperatures of the two mediums be T_1 and T_2, and their convection constants h_1 and h_2 respectively; and T the actual temperature of the disk at any position x; and T_r that of the ring.

Then the total rate of heat exchange between both sides and their respective mediums per sq. cm. of the disk is

$$h_1(T-T_1)+h_2(T-T_2)$$

which by rearranging may be written

$$(h_1+h_2)\left(T-\frac{h_1T_1+h_2T_2}{h_1+h_2}\right) \qquad (230)$$

in which h_1+h_2 is the combined convection constant for the two sides, and $\dfrac{h_1T_1+h_2T_2}{h_1+h_2}$ designated T_a for brevity is the temperature of a single medium having a convection constant $h=h_1+h_2$ common to both sides, which would be equivalent in effect to that of the two mediums.

Then in the equations for θ previously given, if $(T-T_a)$ is substituted for θ, h_1+h_2 for h, and (T_r-T_a) for T_o, we can obtain an equation for the disk temperature, as for example was done in Equation (213).

Reference:

[1] "Table of Functions," *Janke and Emde*, a book.

E. N.—No. 85 Cont. —*W. N. Goodwin, Jr.*

MINIATURE RECORDER USED IN RED CROSS BLOOD PROGRAM

WHOLE blood stored in refrigerated "blood banks" is very susceptible to damage caused by small changes in its temperature. The National Institute of Health, in its requirement for the storage of citrated whole blood, specifies that the blood should be maintained between the temperatures of 4 and 10 degrees C. (39.2 and 50 degrees F.) and preferably between 4 and 6 degrees C. (39.2 and 42.8 degrees F.). The Weston Model 8475 Temperature Recorder has been used successfully to give assurance that the quality of the blood has not been adversely affected by temperature.

Weston Model 8475 Miniature Recorder.

A National Blood Program Directive emphasizes the necessity for continuous accurate records of the temperature of whole blood in storage. "It is extremely important in the storage of whole blood that a definite record be kept showing the temperature at all times within storage refrigerators. Such temperature recording devices should be in operation on all refrigerators in which blood is stored. Graphs or charts which record the accurate temperature should be identified with the proper refrigerator, dated, and filed for any future reference."

The unit which is adaptable to this task is the Weston Model 8475

NOTE: This space has been left blank to prevent the destruction of copy if the reader chooses to correct his copy of Volume 8, Number 2, by clipping the diagram shown on the reverse side of this page.

Miniature Recorder, a distant reading type equipped with five feet of connecting tubing. With this model it is possible to keep the bulb of the instrument within the refrigerator and the recorder on the outside for ease of rewinding the drive and changing the chart. A standard chart having a range of −20 to +20° C. for twenty-four hour revolution is well suited to the blood refrigerator application.

E. N.—No. 100 —*E. T. Oettinger.*

If you plan to attend the 1954

RADIO ENGINEERING SHOW

be sure and see

WESTON EXHIBIT

533-535 Components Ave.

Kingsbridge Armory **New York City**

March 22-25

CORRECTION NOTICE

We wish to call your attention to an error in the article "A Single Point Ammeter Using a Current Transformer," which appeared in Volume 8, Number 2, issue of WESTON ENGINEERING NOTES. The diagram shown in the middle of page 4 of that issue is incorrect. The correct diagram is printed below. Any reader desiring to correct his copy of Volume 8, Number 2, may clip the diagram below and paste it over the incorrect diagram.

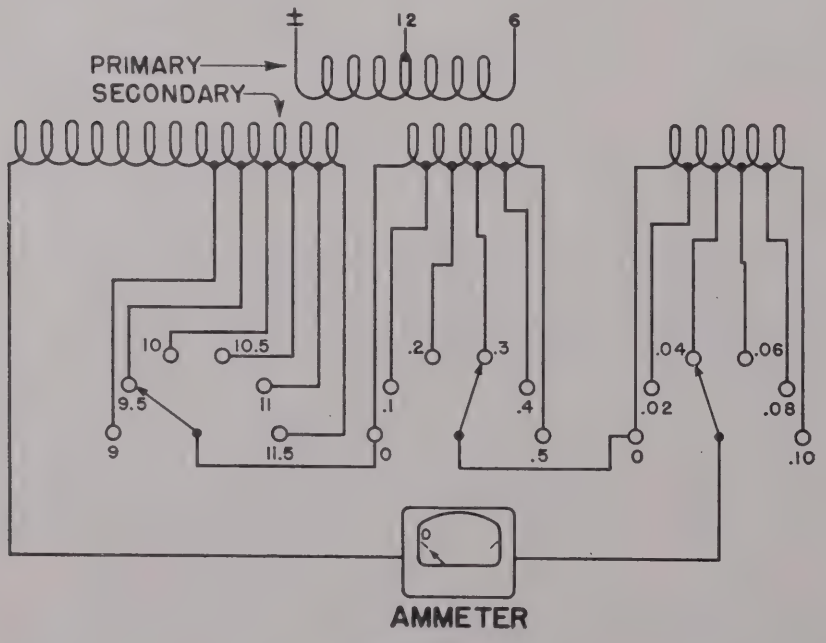

Figure 1.

"Westonia"

E. F. Weston was listening to a lunch table discussion on fixed resistors. Finally he felt impelled to comment. "I wonder if the people who are bragging about the so-called pyrolytic-deposited carbon resistors know that it is really an old Weston development. The Doctor (he always refers to the original Weston in this manner) used this trick of depositing carbon from a hydrocarbon gas in his early work with incandescent carbon filament lamps. He picked up the trick, in turn, from his observations as a boy in the ovens of a gas plant in Wales. Look up Baekeland's Perkin Medal Address!"

So we did. And Baekeland said, in 1915, on the occasion of the award of the Perkin Medal to Dr. Weston, "Weston remembered that as a boy, when he went to visit the gas works to obtain some hard carbon for his Bunsen cell, this carbon was collected from those parts of the gas retort which had been the hottest, and where the hydrocarbon gas had undergone dissociation, leaving a dense deposit of coherent carbon.

"In this chemical phenomenon of dissociation at high temperature, he perceived a chemical means for 'self-curing' any weak spots in the filament of his lamp. The remedy was as ingenious as simple. In preparing his filament, he passed the current through it while the filament was placed in an atmosphere of hydrocarbon gas, so that in every spot where the temperature rose highest on account of greatest resistance, brought about by the irregular structure of the material, the gas was dissociated and carbon was deposited automatically until the defect was cured."

This is the process used in making pyrolytic carbon resistors except that the carbon is deposited on a porcelain or steatite tube heated in a furnace instead of on a carbon filament heated by current passing through it. And thus we seem to turn a full circle in some 70 years.

Printed in U.S.A.

Weston ENGINEERING NOTES

VOLUME 6 DECEMBER 1951 NUMBER 2

In This Issue

A Power Factor Meter for Unbalanced Polyphase Systems

•

Thermal Problems Relating to Measuring and Control Devices—Part VIII—Continued

•

Reactive Damping of the Weston Model 1411 Inductronic® D-C Amplifier

•

Photocell Range Network

John Parker, Editor

E. W. Hoyer, Technical Editor

Copyright 1951,
Weston Electrical Inst. Corp.

WESTON ELECTRICAL INSTRUMENT CORP.,
614 Frelinghuysen Avenue,
Newark 5, N. J., U. S. A.

A POWER FACTOR METER FOR UNBALANCED POLYPHASE SYSTEMS

CONVENTIONAL polyphase power factor meters measure the phase angle between one of the line currents and two of the line voltages and, therefore, only indicate power factor correctly when the voltages and currents are balanced and are sinusoidal. In 1914, W. N. Goodwin, Jr., and B. P. Romain developed, in the Weston laboratory, a polyphase power factor meter for unbalanced loads. It was based on balanced voltages and sinusoidal current and voltage, but was otherwise correct for any degree of current unbalance. This instrument was not made commercially at that time since the only recognized definition of power factor was the ratio of power in watts to the voltamperes, and the instrument measured the ratio of vars to watts which corresponds to the tangent of the power factor angle. These two ratios are only the same for sinusoidal currents and voltages and, therefore, the instrument indicates true power factor only under sine wave conditions.

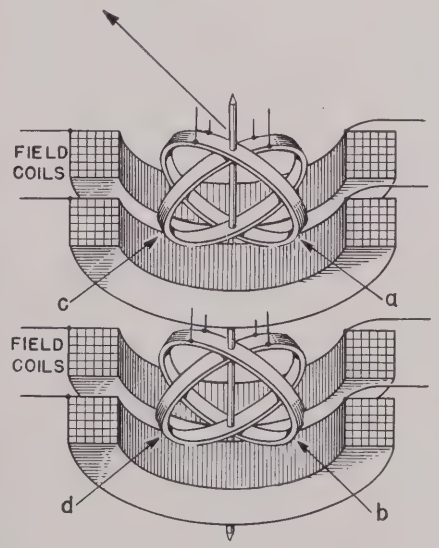

Figure 1

Since that time, the term vector power factor has become widely used and this is the power factor as derived from the ratio of vars to watts. The instrument is, therefore, a true indicator of vector power factor, and since it is correct for any degree of current unbalance, its indications have real meaning and value. This instrument is now being made as the Weston Model 928, type 2.

Figure 1 shows the basic instrument, which is similar to a two-element wattmeter, but has two moving coils in each element, spaced at an angle of 90 degrees to each other. The field coils and moving coils "a" and "b" are connected to a three-phase, three-wire circuit exactly the same as a two-element wattmeter. The torque of these moving coils is then proportional to the actual power in the circuit.

The other moving coils "c" and "d" are so connected to the circuit that their currents are in quadrature with the currents in the corresponding wattmeter coils "a" and "b." This is the same connection that is used on a two-element varmeter and, therefore, the torque of coils "c" and "d" is proportional to vars. The equilibrium position is where the two torques balance, at which position the ratio of vars to watts is indicated, corresponding to the tangent of the power factor angle.

It is well known that a two-element wattmeter will indicate three-phase, three-wire watts for un-

balanced as well as balanced currents and voltages, and the conventional two-element varmeter using phase voltage and line current will likewise indicate three-phase, three-wire vars correctly if the current is unbalanced, provided the voltage is balanced. Since the two-element power factor meter is essentially a two-element wattmeter and varmeter, it will indicate correctly for any condition of current unbalance as long as the voltages remain balanced in a three-wire line.

This two-element power factor meter can also be considered as two single-phase power factor meters having a common moving element staff. The single-phase instrument has a resistor in series with one moving coil and a reactor in series with the other moving coil. This provides currents in each coil 90 degrees from each other, which is the same condition that exists in the two-element instrument. The single-phase instrument measures the ratio of vars to watts or vector power factor since the torque on one coil is proportional to watts and the torque on the other is proportional to vars. Since two single-phase wattmeters will indicate total watts when combined into a single two-element wattmeter, and two single-phase varmeters will indicate total vars when combined into a single two-element varmeter, two single-phase power factor meters will indicate total power factor (vector) when combined into a two-element power factor meter.

Goodwin has also made a mathematical analysis and proof of the theory of the two-element power factor meter, and it can be shown mathematically that the instrument will measure vector power factor for the conditions stated previously.

Figure 2 shows the actual internal and external connections of the instrument for three-phase, three-wire circuits. Moving coils "a" and "b" are provided with a center tap and coils "c" and "d" are each connected to the center tap. The other ends of the coils are connected through resistors to the lines and form two artificial Y networks.

Just as in a two-element wattmeter and varmeter, the field coils use line currents I_1 and I_3. In the bottom element, the effective current in the moving coil "a" is in phase with and proportional to line voltage E_{1-2}. This is the same voltage as used for this element of a wattmeter. The current in moving coil "c" is in phase with and proportional to phase voltage E_{0-3}, which is the voltage used for this element of a varmeter. In like manner, the currents in the moving coils of the top element are in phase with and proportional to the wattmeter voltage E_{3-2} and varmeter voltage E_{1-0}.

The resistors connected to "a" and "b" coils are all equal to each other. The resistors in series with "c" and "d" coils are equal to each other and the relationship of these resistors to the others determines the scale range of the instruments.

For three-phase, four-wire circuits the so-called two and one-half element instrument is used. This meter is connected the same as the two and one-half element wattmeter and varmeter and will indicate vector power factor for any condition of current unbalance provided the voltages are balanced. Its theory of operation is identical to the two-element power factor meter.

The conventional single-element power factor meter will even indicate incorrectly for resistive loads if they are unbalanced. For example, assume a delta load having impedances of

5+j0 across lines 1-2.
10+j0 across lines 2-3.
15+j0 across lines 3-1.

Using a conventional power factor meter with its single current coil in the various lines (potential circuits connected with same relationship to current coil in all cases), the following indications are obtained:

With current coil in line 1, indicated power factor is 0.961 lead.
With current coil in line 2, indicated power factor is 0.985 lag.
With current coil in line 3, indicated power factor is 0.993 lag.

The two-element power factor meter indicates unity power factor, which is the true vector power factor as computed.

Other unbalanced loads can cause much larger errors. The following impedances of a delta load have the resistance balanced with the inductance unbalanced in one phase.

5+j5 across lines 1-2.
5+j10 across lines 2-3.
5+j10 across lines 3-1.

For this load condition, the single-element power factor indicates as follows:

With current coil in line 1, indicated power factor is 0.72 lag.
With current coil in line 2, indicated power factor is 0.50 lag.
With current coil in line 3, indicated power factor is 0.45 lag.

The computed vector power factor is 0.57 lag, which is also the reading obtained from the two-element meter.

Changing the load across lines 3-1 in the last example from inductive (5+j10) to capacitive (5−j10) rules out the single-element meter since it will read lead, lag, or off scale, depending upon the location of the current coil. The actual indications are:

0.999 lead with current coil in line 1.
0.50 lag with current coil in line 2.
cosine 180° with current coil in line 3.

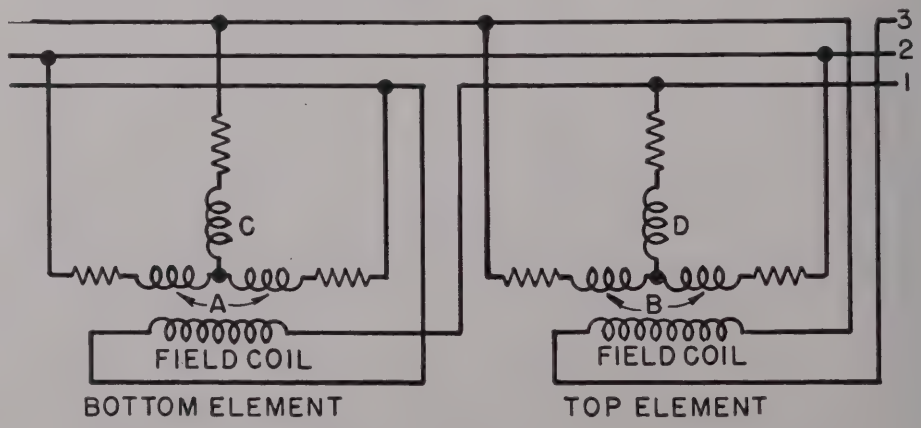

Figure 2

The computed vector power factor is 0.87 lag, which is the power factor indicated by the two-element meter.

This power factor meter is of special value where it is necessary to keep the over-all power factor above a certain value in a three-phase system having a number of single-phase loads connected to the various phases. Loads such as electric furnaces may cause the power factor to decrease below a desired minimum, and when the power factor can be read at a glance, the loads may be changed to raise the power factor. In a system of this type, the currents in each phase may differ widely from each other both in phase and magnitude, making it necessary to use a power factor meter giving a true indication for any load condition.

E. N.—No. 86. —*R. F. Estoppey.*

THERMAL PROBLEMS RELATING TO MEASURING AND CONTROL DEVICES—PART VIII—CONTINUED

Electric Heating of a Conductor, the Resistance of Which Varies With Temperature

INTRODUCTION

In the first installment of Part VIII which appeared in ENGINEERING NOTES, *Volume 6, Number 1, a study was made of the heating of conductors by current, the resistances of which vary with temperature, where the heat not absorbed by the conductors is dissipated to the surrounding medium. In the present installment, consideration will be given to similar conductors but from which the heat dissipated to the surrounding medium is practically negligible relative to the amount generated, as might occur during short circuits, or heavy overloads of relatively short duration.*

24. TO DETERMINE THE INCREASE IN TEMPERATURE OF A CONDUCTOR, THE RESISTANCE OF WHICH VARIES WITH TEMPERATURE, HEATED BY AN ELECTRIC CURRENT, AT ANY TIME AFTER THE INITIAL APPLICATION OF THE HEATING CURRENT, WHEN PRACTICALLY ALL OF THE HEAT GENERATED IS ABSORBED BY THE MATERIAL, AND A RELATIVELY NEGLIGIBLE AMOUNT IS DISSIPATED TO THE SURROUNDING MEDIUM.

It is frequently necessary or desirable to know the temperatures which may be reached in electrical circuits which are subject to the heavy currents produced by short or partial short circuits or definite overloads. Under such conditions, the heat is generated at a rate so large relative to the cooling rate that for practical purposes it may be considered that all of the heat is effective in raising temperature. This will be considered under two conditions: (a) for constant current, and (b) for constant voltage.

24(a). *When the Heating Current Through the Conductor Is Constant.* In the general Equation (161), if the rate of loss of heat, h, to the surrounding medium is made zero, we have,

$$\theta=\frac{1}{a}\left(\epsilon^{+\left(\frac{W_o a}{Ms}\right)t}-1\right) \qquad (171)$$

where $W_o=I^2R_o$, I is the constant current applied, R_o the initial resistance, and a the temperature coefficient of resistance in ohms per ohm per deg. cent.

This equation shows that under the conditions specified for a positive temperature coefficient, the temperature increases indefinitely with time. In practice, of course, the conditions will change with temperature such as for example, a change of state by melting or vaporizing.

Equation (171) can be modified to show the relation between the temperature increase which results when the resistance varies with temperature and that resulting if the resistance were constant, that is $a=0$.

If the resistance remained constant, and all of the heat added were absorbed by the material, then the increase in temperature, θ_i, in the time t would be

$$\theta_i=(W_o t)/(Ms) \qquad (172)$$

since $W_o t$ is the total heat added in time t, and Ms is the amount of heat absorbed per degree.

If this relation is substituted in Equation (171), we have for the temperature at any time

$$\theta=\frac{1}{a}(\epsilon^{\theta_i a}-1) \qquad (173)$$

Example:

Assume a copper coil, from which the heat dissipated to the surrounding medium is relatively negligible, heated at such a rate by a constant current that its temperature increase in a given time would be $\theta_i=100$

deg. cent. if its resistance had been constant. Determine the increase in temperature if the resistance of the coil had the temperature coefficient $a=+0.004$ at the initial temperature, with all other conditions unchanged.

Then from Equation (173), the increase in temperature during this given time would be

$$\theta=\frac{1}{0.004}\left[\epsilon^{+(100\times 0.004)}-1\right]=123 \text{ deg. cent.}$$

That is, under the assumed conditions of time and heating, the effect of the temperature coefficient is to increase this temperature by 23 per cent.

24(b). *When the Conductor Is Heated by Maintaining a Constant Difference of Potential Between Its Terminals.*

If V = difference of potential between terminals of the conductor, held constant.

R = resistance of the conductor at any time and temperature.

$R=R_o(1+a\theta)$.

R_o = initial resistance.

The amount of heat added in the time dt is $(V^2/R)dt=V^2dt/[R_o(1+a\theta)]$ joules.

The amount absorbed by the material in time dt during which the temperature increases $d\theta$ is $Msd\theta$.

Since all of the heat is assumed to be absorbed by the material, then

$$V^2dt/[R_o(1+a\theta)]=Msd\theta \qquad (174)$$

Integrating this and remembering that when $t=0$, $\theta=0$, we have

$$\theta=\frac{1}{a}\left(\sqrt{\frac{2V^2at}{R_oMs}+1}-1\right) \qquad (175)$$

This may be expressed in terms of the temperature which would result under the same conditions if the resistance remained constant, that is when $a=0$, namely, $V^2t/(R_oMs)$, which let us designate θ_r. Then Equation (175) becomes:

$$\theta=\frac{1}{a}\left(\sqrt{2\theta_ra+1}-1\right) \qquad (176)$$

Example:

Assume a device having a copper coil connected directly to a source of excessive but constant voltage and that after some definite time the temperature would have increased 100 deg. cent. had the resistance been constant. Find the increase in temperature which actually occurs during the same time when the temperature coefficient of resistance is +0.004 ohm per ohm per deg. cent.

Then from Equation (176) we have

$$\theta=\frac{1}{0.004}\left[\sqrt{200\times 0.004+1}-1\right]=85.4 \text{ deg. cent.}$$

which shows that under the conditions assumed, the effect of the positive temperature coefficient is to reduce the increase in temperature about 15 per cent from that which it would have had, if the coefficient had been zero.

25. *Derivation of Equation (161) for Constant Current.* The heat generated in the conductor by the constant current I through the resistance at any time R in the time dt is

$$Wdt=I^2Rdt=I^2R_o(1+a\theta)dt \qquad (177)$$

For brevity let the rate that heat is generated at the initial temperature, I^2R_o, be designated W_o. Then Equation (177) for the total heat generated becomes $Wdt=W_o(1+a\theta)dt$.

The heat dissipated to the surrounding medium in the time dt is $h\theta dt$, and the heat absorbed by the material during the time dt during which the temperature increases $d\theta$ is $Msd\theta$.

Then, since the heat absorbed by the material plus the heat dissipated to the medium in dt, must be equal to the total heat generated in that time, we have

$$W_o(1+a\theta)dt=h\theta dt+Msd\theta \qquad (178)$$

from which we obtain

$$dt=\left(\frac{Ms}{h-W_oa}\right)\frac{d\theta}{\frac{W_o}{h-W_oa}-\theta} \qquad (179)$$

Integrating Equation (179) under the condition that when $t=0$, $\theta=0$, we have

$$t=\frac{Ms}{h-W_oa}\log\left(\frac{W_o/(h-W_oa)}{W_o/(h-W_oa)-\theta}\right) \qquad (180)$$

Putting this into the exponential form it becomes

$$\theta=\frac{W_o}{h-W_oa}\left(1-\epsilon^{-\left(\frac{h-W_oa}{Ms}\right)t}\right) \qquad (181)$$

In this Equation, $W_o/(h-W_oa)$ is the final temperature reached, provided h is greater than W_oa, which may be designated θ_r; and $Ms/(h-W_oa)$ has the dimensions of time, and therefore it represents the time constant of the conductor which may be designated by t_r. Then Equation (181) may be written

$$\theta=\theta_r\left(1-\epsilon^{-\frac{t}{t_r}}\right)$$

which is Equation (161).

Derivation of Equation (168) for Constant Voltage:

The heat generated in the conductor having a re-

sistance $R=R_o\ (1+a\theta)$ at any time, during a time dt, when a constant voltage V is applied to its terminals, is

$$\frac{V^2}{R}dt=\frac{V^2dt}{R_o(1+a\theta)}$$

The heat dissipated to the surrounding medium in dt is $h\theta dt$, and the heat absorbed by the material in the time dt, during which the temperature changes $d\theta$, is $Msd\theta$. Then the total heat added in dt is equal to the heat dissipated plus the heat absorbed in that time, that is,

$$W_o\left(\frac{dt}{1+a\theta}\right)=Msd\theta+h\theta dt \qquad (182)$$

where for brevity $W_o=V^2/R_o$, which is the initial rate at which heat is generated.

Separating the variables and putting it into a form for integration, Equation (182) becomes

$$dt=Ms\left[\frac{d\theta}{W_o-h\theta-ha\theta^2}+\frac{a\theta d\theta}{W_o-h\theta-ha\theta^2}\right] \qquad (183)$$

Integrating this equation, and applying the condition that when $t=0$, $\theta=0$, we obtain after simplification,

$$t=\frac{Ms}{2}\left[\frac{1}{h}\log\frac{W_o}{W_o-h\theta-ha\theta^2}+\frac{1}{\sqrt{4W_oha+h^2}}\log\left(\frac{2W_o-h\theta+\theta\sqrt{4W_oha+h^2}}{2W_o-h\theta-\theta\sqrt{4W_oha+h^2}}\right)\right] \qquad (184)$$

This equation can be changed to a simpler and dimensionless form by dividing through by h, and designating W_o/h as θ_m, and Ms/h as t_o, which are, respectively, the final temperature and time constant which would result if the resistance did not vary with changes in temperature, that is if $a=0$. Making these substitutions in Equation (184) we obtain

$$\frac{t}{t_o}=\frac{1}{2}\left[\log\frac{1}{1-\frac{\theta}{\theta_m}-a\theta_m\left(\frac{\theta}{\theta_m}\right)^2}+\frac{1}{\sqrt{1+4a\theta_m}}\log\left\{\frac{\left[1-\frac{1}{2}\left(\frac{\theta}{\theta_m}\right)\right]+\frac{1}{2}\left(\frac{\theta}{\theta_m}\right)\sqrt{1+4a\theta_m}}{\left[1-\frac{1}{2}\left(\frac{\theta}{\theta_m}\right)\right]-\frac{1}{2}\left(\frac{\theta}{\theta_m}\right)\sqrt{1+4a\theta_m}}\right\}\right]$$

which is Equation (168).

Reference:

WESTON ENGINEERING NOTES, Vol. 2, Page 3, 1947.

E. N.—No. 85 Cont. —*W. N. Goodwin, Jr.*

REACTIVE DAMPING OF THE WESTON MODEL 1411 INDUCTRONIC® D-C AMPLIFIER

This is one of a series of applicational articles. The original description of the Model 1411 Inductronic D-C Amplifier appeared in the April 1951 (Vol. 6, No. 1) issue of WESTON ENGINEERING NOTES.

IN SOME applications of the Model 1411 Amplifier, it may be desirable to damp the indication, for example, to average a fluctuating input. Some damping is intrinsic in the indicating instrument, but damping by this means is generally limited to a response time constant of seconds at best, and then at some sacrifice of accuracy in the instrument.

In such cases, the feedback system itself may be damped by including reactance in the feedback network, with no effect upon steady-state accuracy. The system then responds exponentially with a time constant that is a function of the transient response of the complex network. In practice, time constants much larger than obtainable by damping the instrument proper are possible; up to several minutes in some cases.

Method

Theoretically either inductive or capacitive feedback may be used, but for practical purposes a two-winding, iron-cored mutual inductance is best. It is applied by including a primary winding in the output current circuit and a secondary winding in series with the induction converter in the amplifier, in degenerative relation. The resistance of the primary winding should not be larger than 1,000 ohms, and the secondary winding not larger than 50 ohms, to avoid appreciable sensitivity loss. An R-C circuit is included across the primary to by-pass the primary self-inductance which would cause a feedback phase delay and possibly oscillation. This is a precaution rather than a major function.

The feedback system will then respond exponentially, with the indication at time (t) relative to the final indication expressible as:

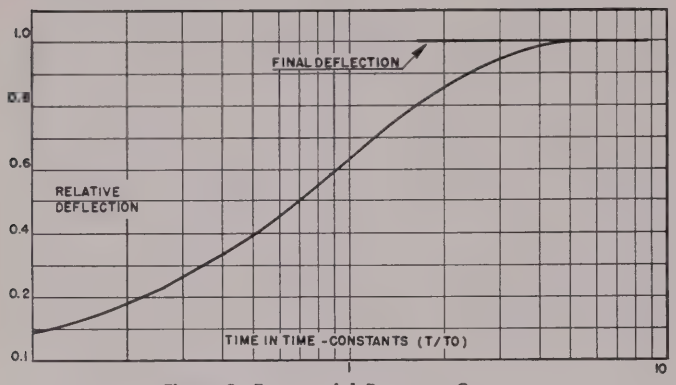

Figure 1—Exponential Response Curve.

$$\frac{\text{indication at time } (t)}{\text{final indication}} = 1 - e^{-t/t_o} \qquad (1)$$

wherein e is the natural log base (2.7---) and t_o is the time constant of the feedback network. The percentage of final indication with time in terms of time constants (t/t_o) is shown in the curve of Figure 1, which is a plot of expression (1).

Potential Circuit

The damping reactor is applied to potential-input circuits as shown in Figure 2. The range-determining resistor is R_1, which may be a mutual pi network in some cases. The steady state calibration relationship for this circuit is:

$$\text{(input) } e = IR_1 \qquad (2)$$

and with the standard output current range of 1 milliampere, the input range in millivolts will equal the value of R_1 in ohms.

The exponential time constant is the ratio of the feedback inductance to the effective feedback resistance, which is:

$$t_o = Lm \left[\frac{R_1+R_g}{R_1R_g}\right]\left[\frac{R_s+R_g}{R_g}\right] \text{ (seconds)} \qquad (3)$$

wherein Lm is the mutual coupling inductance in henrys, R_g is the converter shunting resistance, usually 200 ohms, and R_s is the input source circuit resistance. When the source resistance R_s is small with respect to the converter shunt (R_g), the last term may be neglected. And when, as is usually the case, R_g is large with respect to R_1, the first term reduces to $1/R_1$. So for practical purposes:

$$t_o = Lm/R_1 \text{ (seconds)} \qquad (4)$$

Current Circuit

A reactor-damped current-input circuit is shown in Figure 3, which has two range resistors, R_1 and R_2, forming a current ratio network. The steady-state calibration relationship for this circuit is

$$\text{(input) } i = I\frac{R_1}{R_1+R_2} \qquad (5)$$

The exponential time constant is now:

$$t_o = Lm\left[\frac{R_1+R_2+R_g}{R_1R_g}\right] \times \left[\frac{R_g(R_1+R_2)+R_s(R_1+R_2+R_g)}{R_s(R_1+R_2+R_g)}\right] \text{ (seconds)} \qquad (6)$$

wherein R_g and R_s are the converter shunt and the source resistance as in the potential case. When the source resistance is large with respect to the other network resistances, the last term may be neglected. And when, as is usually the case, R_1 and R_g are small with respect to R_2, the first term may be reduced. So for practical purposes:

$$t_o = Lm\frac{R_2}{R_1R_g} \qquad (7)$$

By-Pass Circuit

The reactor primary R-C by-pass circuit is not at all critical, and in many cases the losses in the reactor are

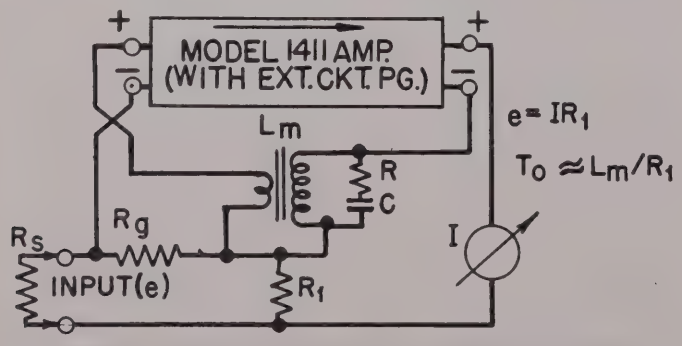

Figure 2—Damping Reactor applied to Potential Input Circuit.

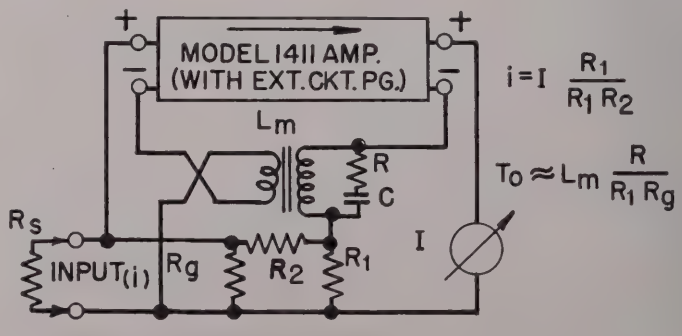

Figure 3—Damping Reactor applied to Current-Input Circuit.

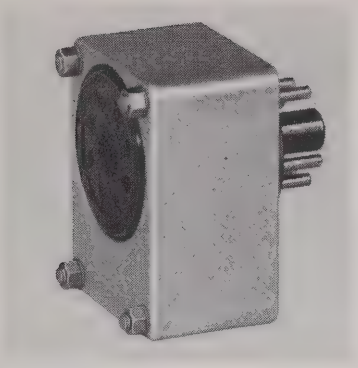

Figure 4—Model 9914—Damping Adaptor.

sufficient to avoid oscillation. But as a precaution, it is recommended.

Ideally, the *R-C* shunt should form a critically damped circuit against the primary self-inductance (*Lp*) of the reactor, at a resonant frequency (w_o) somewhere between 10 and 100 radians/sec. So:

$$C = \frac{1}{w_o^2 Lp} \tag{8}$$

and

$$R = 2\, w_o Lp \tag{9}$$

It is suggested that an w_o of 50 be selected. *C* may be a non-polarized electrolytic capacitor, and normal orders of leakage will do no harm. With large reactors where the winding resistance is low with respect to *R*, the capacitor may be omitted.

Reactors

The only limit to the reduction of response speed obtainable is the physical size of the reactor with regard to tolerable winding resistances. Figure 4 shows a small reactor available as a stock accessory and termed Model 9914 Damping Adapter. It is designed to mount within the Model 1411 Amplifier between the Range Standard and the Range Standard socket. It is sufficient for damping low ranges to a time constant of several seconds.

For greater damping, larger externally connected reactors are required. A typical reactor of standard Weston construction can be obtained for Model 1411 damping to *Lm* values of 10 henrys maximum.

E. N.—No. 87. —*R. W. Gilbert.*

PHOTOCELL RANGE NETWORK

For Use With the Weston Inductronic® D-C Amplifier

THE Model 1411 Inductronic® D-C Amplifier is ideal for use with Weston dry disc photoelectric cells because it operates the cell under essentially a condition of zero load resistance. Data given previously shows the lower the instrument resistance associated with barrier layer cells, the more linear the response. The photocell terminal potential is automatically balanced to zero, and better linearity and stability are realized than possible with a direct-connected indicating instrument. Also, operation on several ranges without serious mistracking is possible, and the following general design of circuit is suggested.

When a given photocell is used with a Model 1411 Amplifier on a single range, it is usual to match the range standard to the sensitivity of the particular cell being used, and the cell and range standard are paired by number or other means. However, for multirange work, the number of range standards for a given cell becomes burdensome, and damage to the cell would require replacement of all of its associated range standards.

In such cases, it is apparent that switch selection of ranges together with a single-element means for correcting the entire network to specific cell sensitivities is preferred. The element may be either a plug-in resistor supplied with each cell, or preferably a calibrated adjustable element which can be set to the sensitivity of a specific cell. To this end, the following design arrangement is presented.

The Figure illustrates a linear range attenuator for use as the feedback element of the Model 1411 in place of the range standard. The range is a function of the included mutual portion (R_m) of the series of resistors, and the sensitivity adjustment is included as part of the total resistance. The fixed portion of the total resistance, including the mutual resistance, is 1,000 ohms, and the adjustable portion for sensitivity setting (R_s) is 150 to 1,000 ohms. The fixed 1,000-ohm portion is tapped to the range with minimum-range and maximum-range values of mutual resistance of 30 minimum and 900 maximum ohms, respectively, corresponding to 5 and 150 foot-candles, respectively. The relationship between the mutual resistance of each range tap and the range in ft-candles is:

$$R_m = \text{range in ft-candles} \times 6 \text{ (ohms)} \tag{1}$$

from which the series of resistors can be calculated for the required range complement between the limits of $R_m = 30$ ohms (5 ft-candles) and $R_m = 900$ ohms (150 ft-candles). The total of 1,000 ohms is made up by the sum of R_m and the fixed end-portion resistor, which has a minimum value of 100 ohms.

A 250-ohm shunt is included across the input terminals for proper galvanometer shunting resistance. The cell sensitivity adjustment (R_s) can accommodate cell sensitivities from 6 to 3 microamperes/foot-candles corresponding to resistance values of 0 and 1,000

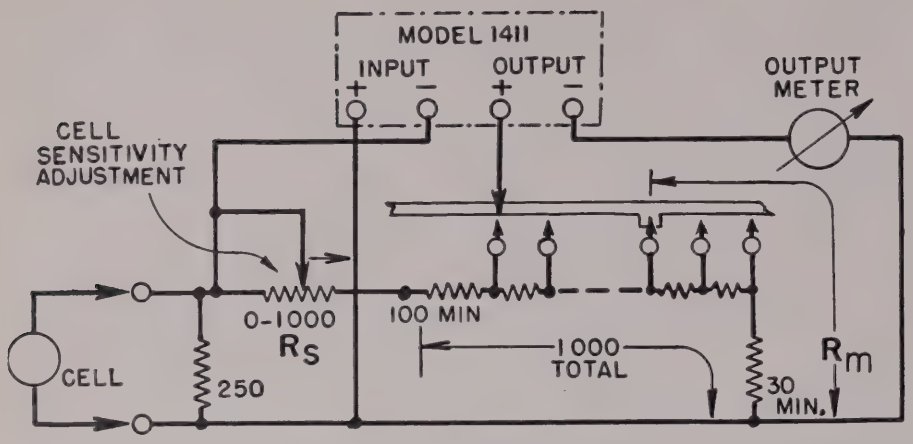

Model 1411—Photocell Network.

R_m to each switch point = range in ft-cd × 6 (ohms)

$$R_s \text{ setting} = \frac{6{,}000}{\text{cell sensitivity } \mu a/fc} - 1{,}000 \text{ (ohms)}$$

ohms, respectively. The relationship is as follows:

$$R_s = \frac{6{,}000}{\mu a/fc} - 1000 \text{ (ohms)} \quad (2)$$

or the sensitivity of the cell in $\mu a/fc$ relates to resistances as:

$$\mu a/fc = \frac{6{,}000}{R_s + 1{,}000} \quad (3)$$

Thus the setting of the cell sensitivity adjustment may be specified from the output of the cell in microamperes/foot-candles (2), or vice versa (3).

In cases where multiple-cell targets or filtered cells falling outside of the 3-6 $\mu a/fc$ level are used, a range multiplying figure may be included and the sensitivity figure restated within the range of 3-6, with the range multiplier expressed as a denominator.

Example: A filtered cell has an output of 0.8 $\mu a/fc$ so that a range multiplier of 5 would be appropriate. The cell output may be stated as 4/5 $\mu a/fc$. The cell sensitivity adjustment from (2) then should be:

$$R_s = \frac{6{,}000}{4} - 1{,}000 = 500 \text{ ohms}$$

and the scale readings multiplied by 5.

A ten-turn 1,000-ohm Micropot or Helipot is ideal for sensitivity setting. This type of resistor can be equipped with a geared dual 10/1 dial figured to 1,000, and with a 1,000-ohm element reads directly in ohms. The suggested system has the advantage of being able to accept and standardize cells of any output sensitivity. It also is continuously adjustable, and can be set by test against a standardizing light source.

E. N.—No. 88. —*R. W. Gilbert.*

WESTON REPRESENTATIVES

ALBANY 7, N. Y.—Carse Electric Corporation.....100 State St.—Albany 3-3628
ATLANTA 3, GA.—E. A. Thornwell, Inc...217 Whitehall St., S.W.—Walnut 3548
BALTIMORE, MD.—Thomas H. Closs, 17 W. Pennsylvania Ave., Towson 4, Md.—TOwson 6335
BOSTON 16, MASS.—Cowperthwait and Brodhead, 131 Clarendon St.—COmmonwealth 6-1825
BUFFALO, N. Y.—Cooper-Morgan, Inc.....Highland Ave. at Lake St., P. O. Box 152, Hamburg, N. Y.—EMerson 3405-6
CHARLOTTE 2, N. C.—Ranson, Wallace & Company, 116½ E. 4th St.—CHarlotte 4-4244
CHICAGO 6, ILL.—Weston Electrical Instrument Corp. Room 1222, 205 W. Wacker Dr.—FRanklin 2-4656
CINCINNATI 37, OHIO—The Beedle Equipment Co., Roselawn Center Building, Reading and Section Rds.—Jefferson 2640
CLEVELAND 14, OHIO—The Ambos-Jones Co., 1085 The Arcade—CHerry 1-7470
DALLAS 5, TEXAS—Butler and Land.....5538 Dyer St.—EMerson 6-6631
DENVER 16, COLO.—Peterson Company....4949 Colorado Blvd.—DExter 5434
DETROIT 21, MICH.—T. S. Cawthorne Company, 16607 James Couzens Highway—DIamond 1-2121
HOUSTON 2, TEXAS—Lynn Elliott Company...371 M & M Bldg.—CHarter 4715
JACKSONVILLE 4, FLA.—Ward Engineering Co., Inc., 903 West Adams Street—Jacksonville 4-6739
KNOXVILLE 2, TENN.—A. R. Hough, 402 Church St., P. O. Box 1452—KNoxville 2-1383
LITTLE ROCK, ARKANSAS—Curtis H. Stout, 400 Shall St., P. O. Box 107—Little Rock 4-8835
LOS ANGELES 27, CALIF.—Edward S. Sievers, 5171 Hollywood Blvd.—NOrmandy 2-1105
MEMPHIS, TENN.—Curtis H. Stout.....730 M & M Bldg.—Memphis 8-7601
MIDDLETOWN, CONN.—Dittman & Greer, Inc., 33 Pleasant St., Middletown 6-9606
MINNEAPOLIS 3, MINN.—Pinkney & Hine, 552-3 Plymouth Bldg.—LIncoln 0523-4
NEWARK 5, N. J.—J. R. Hemion.....614 Frelinghuysen Ave.—BIgelow 3-4700
NEW ORLEANS 12, LA.—W. J. Keller.....415 Natchez St.—MAgnolia 3603-4
NEW YORK 7, N. Y.—Weston Electrical Instrument Corp., Room 1775, 50 Church St.—WOrth 4-3510
ORLANDO, FLA.—Ward Engineering Co., Inc., 1217 West Central Ave.—ORlando 2-4295
PHILADELPHIA 2, PA.—Joralemon, Craig & Co., 112 So. 16th St.—RIttenhouse 6-2291-2
PHOENIX, ARIZ.—J. E. Redmond Supply Co., 625 W. Madison St., P. O. Drawer 869—Phoenix 4-8471
PITTSBURGH 22, PA.—Russell F. Clark Co., 1404 Clark Bldg.—ATlantic 1-8089, 1-8090
ROCHESTER 4, N. Y.—Rittenhouse & McGuire Co., 311 Alexander St.—BAker 2340
SAN FRANCISCO 5, CALIF.—Herman E. Held, 120 Main St.—GArfield 1-6130-1, SUtter 1-2652
SEATTLE 4, WASH.—Eicher & Co.....263 Colman Bldg.—MUtual 2411, 2412
ST. LOUIS 1, MO.—C. B. Fall Co...Suite 1003, 317 N. 11th St.—CHestnut 2433-4
SYRACUSE 2, N. Y.—Naylor Electric Company, 317 State Tower Bldg.—SYracuse 2-3894
TULSA 1, OKLA.—Riddle and Hubbell Company, 302 S. Cheyenne Ave., P. O. Box 727—TUlsa 3-4697
WASHINGTON 11, D. C.—Weston Electrical Instrument Corp., 6230 Third St., N. W.—TUckerman 2414
CALGARY, ALTA, CAN.—Northern Electric Co., Ltd.....709 8th Ave., W.
HALIFAX, N. S., CAN.—Northern Electric Co., Ltd.....86 Hollis St.
MONCTON, N. B., CAN.—Northern Electric Co., Ltd.....599 Main St.
MONTREAL, QUE., CAN.—Northern Electric Co., Ltd...1620 Notre Dame St., W.
MONTREAL 25, QUE., CAN.—Powerlite Devices, Ltd...1440 St. Catherine St., W.
OTTAWA, ONT., CAN.—Northern Electric Co., Ltd.....141 Catherine St.
REGINA, SASK., CAN.—Northern Electric Co., Ltd.....2300 Dewdney Ave.
TORONTO 9, ONT., CAN.—Powerlite Devices, Ltd.....1870 Davenport Road
TORONTO, ONT., CAN.—Northern Electric Co., Ltd.....143 Fleet St.
VANCOUVER, B. C., CAN.—Northern Electric Co., Ltd.....150 Robson St.
WINNIPEG, MAN., CAN.—Northern Electric Co., Ltd.....65 Rorie St.

Printed in U.S.A.

Weston ENGINEERING NOTES

VOLUME 5 NOVEMBER 1950 NUMBER 3

In This Issue

The Measurement of Moisture in Lumber

•

Differential and Ratio Applications of Weston Relays

•

An Alternator Field Temperature Indicator

•

The Use of Weston Type 30 Volume Level Indicators on 150 Ohm Lines

John Parker, Editor

E. W. Hoyer, Technical Editor

Copyright 1950,
Weston Electrical Inst. Corp.

WESTON ELECTRICAL INSTRUMENT CORP.,
614 Frelinghuysen Avenue,
Newark 5, N. J., U. S. A.

THE MEASUREMENT OF MOISTURE IN LUMBER

IN THE manufacture of wood products—furniture, cabinet work, interior trim—the amount of free moisture in the wood itself is becoming recognized as a very important factor. In general, wood should be processed when at a moisture content representative of the mean value it will attain over the years of service of the manufactured item. If processed when at high moisture, it will later shrink and perhaps crack; if processed when too dry, it will swell. The optimum moisture content of the lumber is always desirable.

Even kiln-dried lumber may vary from the preferred moisture content.

Classically, moisture in wood could only be determined by weighing a sample, drying it in a special oven and taking a second weight. This procedure is time consuming and requires laboratory facilities. Although it remains the basic standard to which other measurements are referred, there are today available direct reading moisture meters for lumber with which entirely adequate accuracy can be obtained instantly. They are portable and may be used on the lumber racks or in the yard.

Although several methods have been investigated for the quick measurement of moisture, no other system approaches in simplicity that of the conductive type. The essential principle here is simply measuring the electrical resistance between two spaced points in the lumber. The resistance to passage of electric current in a piece of lumber, or, putting it in another form, the carrier of the electric current is simply the moisture in the wood. The less moisture the less the ability to carry electric current and the higher the resistance.

Figure 1—The new Model 8009 TAG Midget Moisture Meter for lumber.

If we establish the type of contact made and the distance between contacts and the voltage at which we make a measurement of the resistance, we can then associate the resistance values quite definitely with the moisture content of each wood species. It will be quite obvi-

ous that the resistance-moisture relation varies with the species when one compares the open grain of oak with the extremely fine grain of beech or maple. Organizations such as the Forest Products Laboratory, U. S. Department of Agriculture, at Madison, Wisconsin, have studied this relationship for many years and have developed a great deal of tabular data on moisture versus resistance. The resistance-moisture relationship is very consistent below the fiber saturation point of wood, which varies from about 25-30 per cent according to species. Of course, this must be converted to final values depending upon the form of contact. In the TAG-Heppenstall moisture meter, special pins somewhat similar to phonograph needles are set in a handle, Figure 2, a fixed distance apart and are pressed into the wood; a hammer type handle, Figure 3, is useful in hard woods and allows for driving pins into the wood.

Because the value of resistance for various woods covers such an enormous range, rather special electrical means are necessary. As an example, between the pins of the TAG-Heppenstall moisture meter we find a resistance of 600,000 ohms for 24 per cent moisture in Douglas Fir, whereas when the moisture drops down to 7 per cent, the resistance rises to 22,500,000,000 ohms. To compress this wide range of a single scale has required somewhat special arrangements as well as very high sensitivity. The conventional TAG-Heppenstall meter is a null type bridge in which the indicating instrument is set to a particular point through an adjustment, and then, with the electrodes in the sample, the dial switch is turned until the same meter reading is obtained. The position of the dial switch indicates the resistance value and the per cent moisture. The high sensitivity needed makes a vacuum tube necessary; batteries are self-contained in the case. Being of a balanced type, the condition of the batteries and the tube do not enter into the reading itself. Readings can be taken in a matter of seconds, with the result that moisture gradient across a board or in a shipment of lumber can be checked rapidly and with confidence.

With the advent of improved vacuum-tube circuits, a new approach has been made possible and the new Model 8009 TAG Midget Moisture Meter for Lumber, Figure 1, is announced. This is a direct-reading instrument, calibrated from 7 to 30 per cent, of small size and good accuracy. It weighs less than 4 pounds and the carrying strap makes it most desirable for measurements of this type. Calibrated directly in per cent moisture for common soft woods, the readings are modified according to tabular information given for hard woods and special types.

It might be stated here that per cent moisture is rather generally stated in terms of dry weight. That is, in the basic oven method, the difference in weight between the material as found and the final completely dry sample, divided by the weight of the dry sample and multiplied by 100, gives the moisture in per cent.

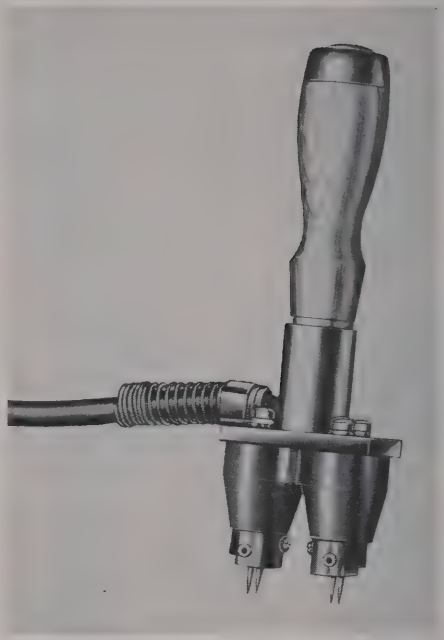

Figure 3—The hammer type handle holder used in hard woods.

In the development of this latest moisture meter, particular attention has been paid to the basic requirements for such a device and these might be listed below.

1. The contact needles should be readily replaceable.
2. Current leakage in the needle-holding device, the cable, and the equipment must be at a minimum for accuracy. A very special high leakage cable is required and special attention must be paid to all parts of the equipment to minimize the leakage.
3. A guard ring circuit should be used on the external probe to minimize circuit leakage effects.

With all the above, construction and assembly must be kept simple and straightforward to the end that servicing can be readily performed.

The value given above for 7 per cent moisture in Douglas Fir might be noted and it amounts to 22,500 *megohms*. Wood with less than 7 per cent moisture is quite dry and very nearly a non-conductor. Values

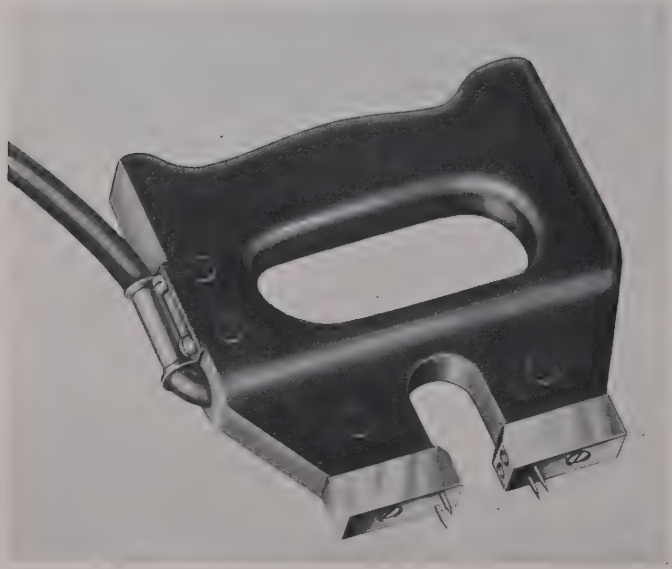

Figure 2—A handle of the type shown here is used when taking the moisture reading of common soft woods. The operator merely presses the special pins into the wood.

less than 7 per cent are most difficult to measure. However, values less than 7 per cent are rarely found except immediately after a drying cycle since most wood products balance in the climate of the United States around 10 to 11 per cent. Thus little need is found for measuring values less than 7 per cent.

In using the instrument, readings are generally taken with opposite electrodes along the grain. If it is suspected that the outer surface contains an excess of moisture, a check with the needles driven only part way in will develop this fact.

Another very interesting application of the moisture meter is in determining when a wood or plaster wall is dry enough to paint. Experience has shown that new plaster is safe to paint when the resistance across the probe is above 600,000 ohms. Since the resistance corresponds to a wood meter calibration point of 24 per cent, a plaster line has been added at this point on the scale.

Wood, in general, may be painted when its moisture does not exceed 20 per cent. It is important, however, that the painter be sure that the siding and insulation are not wet due to faulty plaster drying methods or entrance of water into the walls from some other source. If there is any question of this, a pair of nails, spaced 1¼ inches apart, should be driven through the weatherboard and into the rough siding. If the moisture reading across the nails is above 20 per cent, it is advisable to apply only the priming coat and wait until the interior of the wall dries before applying finish coats. In old buildings, the source of excess moisture should be found. Such moisture may come either from the outside or may be driven into the wall by a high humidity condition within the house.

Figure 4—Checking the moisture content of wood prior to painting.

Figure 5—Here the carpenter very easily checks the moisture content of a piece of lumber.

A summary of important reasons for knowledge of the moisture content of wood follows:

1. A purchaser can quickly determine the moisture in lumber stated to be kiln dried. Obviously, if the moisture content is higher than acceptable for kiln-dried material, the drying has not been completed and the material is not kiln dried in the accepted sense.
2. By the same token the dry kiln operator can check the lumber when shipped to make certain that it is within specific limits and will not be rejected by the purchaser.
3. Each type of glue yields best results when applied to lumber or fabricated parts within specific ranges of moisture content. The glue manufacturers should be consulted for optimum performance as to moisture values.
4. If the moisture content of wood is too high, it may start wood rot or decay; the higher the moisture content the more rapidly the decay will progress.
5. The penetration of preservatives into wood is dependent upon the moisture content.
6. If any moisture gradients exist in lumber or wood products, consequent shrinkage and cracking will be increased.
7. Should two pieces of wood be glued together having different moisture contents, the assembly will most likely warp as both pieces come in equilibrium.
8. The strength of wood decreases as its moisture content approaches the fiber saturation point.
9. Wet lumber weighs more, increases shipping costs.
10. If lumber used in construction work has too high a moisture content, shrinkage will be abnormally high and the entire structure may distort to a point requiring extensive repairs.

To obtain the maximum benefit from the use of an electric moisture meter with its quick response, the user should study the instructions furnished with the device and become thoroughly familiar with its operation. Savings which can be realized over a reasonable period will usually be far higher than the cost of even the most elaborate moisture meter so that the original investment will be recovered rapidly. In numerous instances, it has been found that the original investment has been recovered many times over in even the first year of operation.

—L. Van Blerkom, O. J. Morelock

E. N.—No. 79

DIFFERENTIAL AND RATIO APPLICATIONS OF WESTON RELAYS

WESTON relays of the permanent-magnet movable-coil type, inherently of high sensitivity, are used in many interesting applications. Some of these uses occur in two closely related fields; one dependent upon a "differential" effect and the other dependent upon a "ratio" effect. These terms are described in later paragraphs. It is not always readily apparent that these two effects are identical at a single predetermined point and that a standard relay, differentially connected, will usually offer the desired relay control action.

The differential relay functions by virtue of the difference in voltage or current between two associated circuits. For example, two circuits may be so arranged that a relay contact is normally open when the voltages or the currents of these two circuits are equal and of any value within the rating of the relay, but closure of a contact will occur when one voltage or current differs from the other by a predetermined amount or differential. Note that, with a differential type of action, the device functions because of the difference between the two quantities being compared, regardless of the actual value or level of the quantities. A typical differential relay would be one designed to accommodate any voltage up to, for example, 20 volts on either or both of two circuits, and with contacts arranged to close whenever the voltage difference between circuits exceeded one volt. The relay would also possess the ability to discriminate as to which circuit possessed the higher voltage and make contact to the right or left side accordingly.

The ratio type of action is based on the ratio of one quantity to another rather than on the difference between the two quantities. For example, we might consider two circuits so arranged that a relay contact is normally open when the voltages or the currents of these two circuits are equal and of any value within the rating of the relay. Closure of a contact will occur when the ratio of one voltage or current to the other voltage or current attains a predetermined value or percentage. Note that, with a ratio type of action, the device functions because of the ratio of the two quantities being compared. Therefore, the actual difference between the two quantities at the point of contact closure is dependent upon the value or level of the quantities at the operating point. A numerical example might be that of a relay designed to accommodate any voltage up to, again say, 20 volts on either or both of its two circuits.

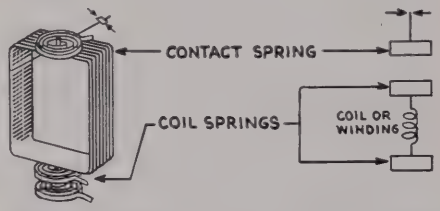

Figure 1—Diagram showing Standard Single Coil Three-Spring Relay.

The contacts would be adjusted to close whenever one quantity differed from the other quantity by a ratio of say 0.1 or 10 per cent. This means that if, for example, the voltage of one circuit was 10 volts, a contact would close when the other circuit differed by a value of 10 per cent of the first circuit, or 1 volt. Or, if the voltage of one circuit of this same relay was 15 volts, the contact would close when the other circuit differed by a value of 10 per cent of the first circuit, or 1.5 volts, and so on.

The ratio type of relay is seldom made and many ratio control problems lend themselves to a differential type of relay. Standard permanent-magnet movable-coil relays may be set up with a differential connection for this use, and a comprehensive discussion of such differential relays may be found in the August, 1946, WESTON ENGINEERING NOTES, Volume 1, Number 4. The use of the differential connection for a ratio application is not as serious a limitation as might first seem in relay control problems and at a single point, which may be predetermined, the differential action is identical with the ratio action. At the null or balanced condition, there is no deflection of the contact arm with either the differential or the ratio method. As process control or alarm features are usually desired for a predetermined differential or ratio change and at a predetermined level, or for synchronizing purposes, the differential connection will meet nearly all requirements.

There are many circuit variations which may be used with a Weston relay of conventional design to obtain differential action. Differential relays with two separate actuating windings can be made but usually the standard single coil relay shown in Figure 1 can be differentially connected to achieve the desired result with consequent savings in cost and delivery time. Figure 2 represents what is probably the simplest of such circuits and is a so-called "bucking" circuit. This circuit is adapted to comparing potentials or the potential drop across shunts if currents are to be compared. This is a null method in that no current flows through the relay when the input voltages are balanced or equal. E_1 and E_2 represent the potentials to be compared, and R_1 and R_2 represent the resistances of the sources and wiring of E_1 and E_2 respectively. Sometimes R_1 or R_2 includes a calibrated rheostat to permit changes in the differential required to operate the relay. R_R represents the resistance of the movable coil of the relay. The relay current I_R for a given potential differential of E_D volts would be:

$$I_R = \frac{E_D}{R_1+R_2+R_R}$$

The relay is subjected to an overload whenever E_D, the difference between E_1 and E_2, exceeds the value at which the contacts are designed to operate. The maximum overload would occur if either E_1 or E_2 were reduced to zero while the

other was at its maximum value. These relays are capable of withstanding appreciable overloads, but overload conditions must be considered when designing such a differential system.

Figure 3 depicts a commonly used variation of the basic "bucking" circuit of Figure 2. This variation permits the comparison of voltages or currents of dissimilar magnitude at the null or balance point. For example, Circuit No. 1 might represent a potential of 20 volts and Circuit No. 2 a potential of 5 volts for the null condition. The resistors R_1 to R_4 can be readily proportioned to achieve such a result. A similar arrangement, omitting R_1 and R_2, will permit comparison of currents of dissimilar value. It is even possible to compare a potential across one circuit with a current passing through the other circuit.

Figure 4 shows the so-called "boosting circuit" wherein a current common to both sources flows at all times, even when the net current through the relay is zero. The resistances R_1 and R_2 may well include portions of a single wirewound potentiometer, with the movable contact arm connected to one terminal of the relay. This enables the relay to be electrically balanced to its mid-position between the contact, or to effect a

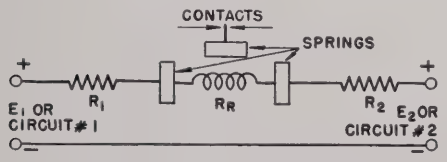

Figure 2—"Bucking" Differential Circuit.

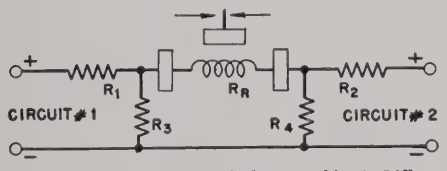

Figure 3—A variation of the "Bucking" Differential Circuit.

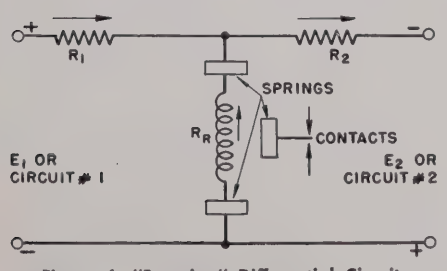

Figure 4—"Boosting" Differential Circuit.

change in the ratio of E_1 to E_2 for operation of the contacts. Generally, the values of R_1 and R_2 are determined by the allowable current drain from the sources E_1 and E_2 when they are at their maximum voltage.

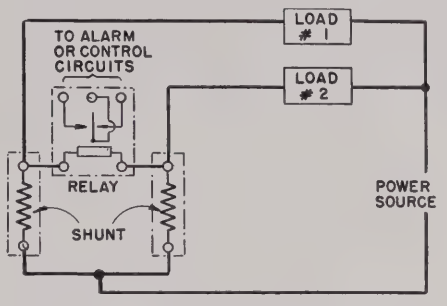

Figure 5—Arrangement to maintain approximately equal current through two varying loads.

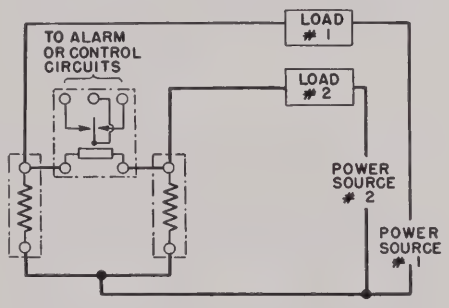

Figure 6—Two varying loads with separate power sources.

If $E_1 = E_2$ at balance, R_1 will equal R_2 and the relay current I_R for a given potential differential of E_D volts would be:

$$I_R = \frac{E_D\, R_1}{2R_1\, R_R + R_1^2}$$

For other conditions where R_1 is not equal to R_2, the relay current I_R would be:

$$I_R = \frac{E_2\, R_1 - E_1\, R_2}{R_1\, R_R + R_2\, R_R + R_1\, R_2}$$

The arrows shown on Figure 4 indicate the direction of current flow for the above equation. If the difference $E_2\, R_1 - E_1\, R_2$ is a negative value, the direction of current through the relay is opposite to that indicated by the arrow at R_R of Figure 4.

There are many other circuit variations which may be used to achieve ratio or differential effects with the conventional three-spring relay, but no general rule or circuit can be given that will represent optimum design for any and all applications. A few examples of applications will serve to illustrate some of the possible uses of differentially connected relays.

Figure 5 shows an application wherein it is desired to initiate an alarm or control action whenever the current difference between Load No. 1 and Load No. 2 exceeds a given value. In this particular application the maximum current might be 100 amperes and the maximum differential might be 2 amperes. This application is basically similar to that of Figure 2 if the millivolt drop of the shunts is likened to E_1 and E_2. R_1 and R_2 are negligible in this instance and it can be seen directly that the range of the Model 534 Relay may be expressed in millivolts. As 2 millivolts represents the desired differential of 2 amperes in 100 ampere 100 mv shunts, the relay range would be 2-0-2 millivolts, the relay contact arm resting midway between contacts when the shunt currents are equal. Figures 6 and 7 show other variations of this same basic circuit. The circuit of Figure 6 is essentially the same as that of Figure 5 except for the use of two separate power sources instead of a single source.

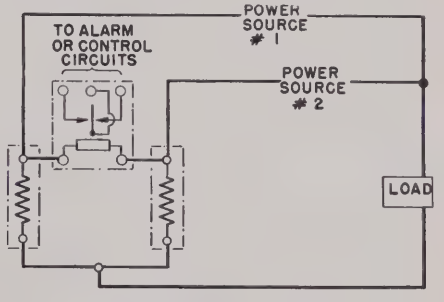

Figure 7—One varying load with two power sources.

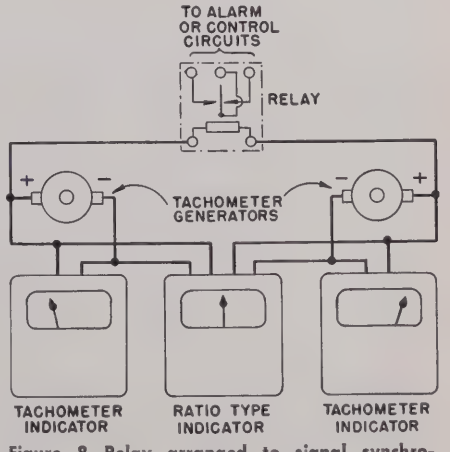

Figure 8—Relay arranged to signal synchronization of input and output shafts—or of shafts of two machines.

Likewise, Figure 7 illustrates the case where a predetermined division of a single load from two power sources might be desired. It is important in Figures 5, 6 and 7 that the common lead between the two shunts be of low resistance and that the connection to it be at its midpoint.

Figure 8 illustrates the application of a differentially connected relay together with Weston speed-ratio and tachometer indicators. The two tachometer generators are connected directly or through gear boxes to rotating parts of the machine or machines with which they are to be associated. These rotating parts may be the input and output rolls of some sheet-rolling process or other process where the working material passes over rolls, such as textile, steel or pulp and paper processes, or may be rotating shafts of separate machines whose speed is to be compared. Weston Circular A-17-D describes such indicators in detail. Three things can be accomplished by such an arrangement:

1. The speed of the input and output tachometer generators is shown by the tachometer indicators, calibrated in terms of whatever quantity is being measured, such as "Yards per Minute," "Operations per Hour," "R.P.M.," etc.
2. The speed ratio of the two tachometer generators is indicated directly in per cent by the ratio meter.
3. The relay may be used for a control or alarm function to maintain synchronization between the two tachometer generators or to operate when a predetermined difference exists between the speeds of the tachometer generators.

There are many more possibilities and combinations for the successful application of differentially connected relays and the preceding discussion is intended to point out some of the functions that might be accomplished by these relays. Detail design of such relays should be considered in the light of the entire problem and it is urged that all details of such applications be submitted, rather than the request for a specific relay, so as to benefit from the background of experience available at Weston.

E. N.—No. 80 —*E. G. DeMott*

AN ALTERNATOR FIELD TEMPERATURE INDICATOR

A DIRECT indication of the temperature of the rotating field of a large alternator is usually considered desirable in the power plant control room. Indication of the temperature of the stator and other fixed items in the power plant is common practice either through the use of thermocouples or embedded resistance elements. In a rotating member, however, it is obviously difficult to use such elements because of the necessity of bringing out connection leads, in turn necessitating slip rings and contact arrangements, and a somewhat different approach is required.

The development of the ratio meter for the measurement of resistance has broadened in recent years, and several installations have been made of a rather special type of ratio meter actually reading the ratio of the voltage to the current in the rotating field. Of course, this amounts to the resistance, which, in turn, is related to temperature. In operation, the instrument provides a continuous temperature indication that can be co-ordinated with the load, reactive power and other factors affecting the efficient operation of the equipment.

In practice, the energy from the current circuit is picked up from a suitable shunt and the voltage is

Figure 1—The Weston Model 918 Ratio Meter.

taken across the brushes to the main slip rings of the alternator field. A somewhat special version of the Weston Model 918 Ratio Meter has been used for this purpose with one coil wound to best match a shunt and the other coil to be best suited for potential connection.

More broadly, the Model 918 mechanism is of the twin-coil type with ratio indicated by the mechanical balance of the two opposing torques produced by the currents of the two coils.

The moving coil, shown in Figure 2, has two separate windings with the axis of rotation running lengthwise through the adjacent sides of the two coils. The ends of each winding are brought out to either two top connecting filaments or two lower filaments. These are extremely low torque springs, their function being purely electrical except for the very small torque required to move the pointer off scale when the instrument is not energized.

The magnetic system is arranged with conventional circular pole pieces and a high coercive magnet. The soft iron core is mounted eccentric to the bore to produce a non-uniform magnetic field. It is quite obvious that the flux density will be greater at the upper end of pole pieces due to the shorter air gap and will be roughly proportional to the actual length of the

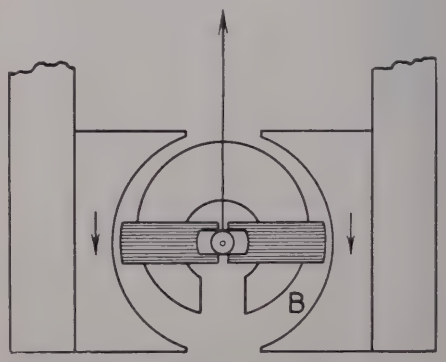

Figure 2—Diagram showing the Ratio Meter Moving Element, Core and Pole Piece Structure.

THIS MONTH

TAG TALKS

ABOUT

NUMBER 3

New

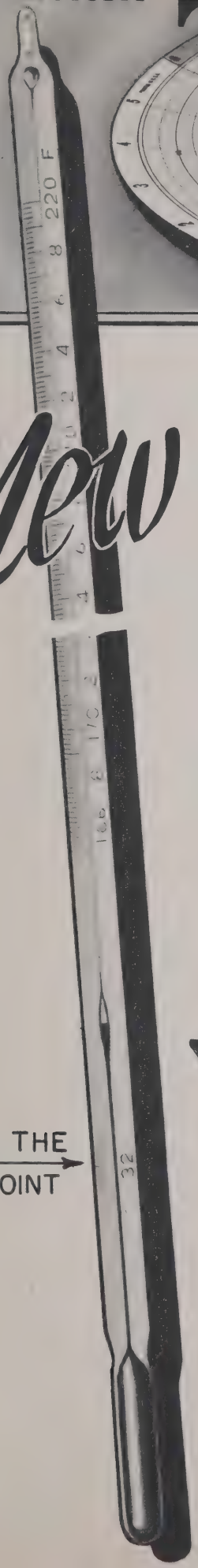

HERES THE ICE POINT →

Another NEW TAG-WESTON Product

the TAG A.S.T.M. CERTIFIED THERMOMETER TESTING SET

Now, here is GOOD NEWS for all research and standardizing laboratories! Yes, technicians...engineers...scientists... men in every laboratory will be glad to learn that they can at last procure highly precise matched thermometers for general temperature testing, in complete sets.

They'll be glad to know, too, that it's TAG who is making these thermometers; that TAG, FIRST IN THE FIELD (1831), IS FIRST TO PRODUCE MASTER SETS OF A.S.T.M. CERTIFIED EXTREME PRECISION THERMOMETERS. (A.S.T.M. = American Society for Testing Materials.)

For a long time, there has existed a distinct need for sets of relatively inexpensive but highly accurate testing thermometers. They are required by laboratories to conduct precision experiments...to establish working temperature standards...to check the working standards they've already established. Until TAG responded, that pressing requirement had gone unanswered.

There are nine matched, extreme-precision, etched stem thermometers in this TAG-A.S.T.M. Certified Test Set. Together, they cover an unbroken temperature gamut, calibrated in either of two scale systems: from -36 to +760 degrees Fahrenheit; from -38 to +405 degrees Centigrade (also known as "Celsius"). They meet all requirements set forth by the recognized scientific societies and official testing agencies for thermometers of this type. Under the specifications of the American Society for Testing Materials,

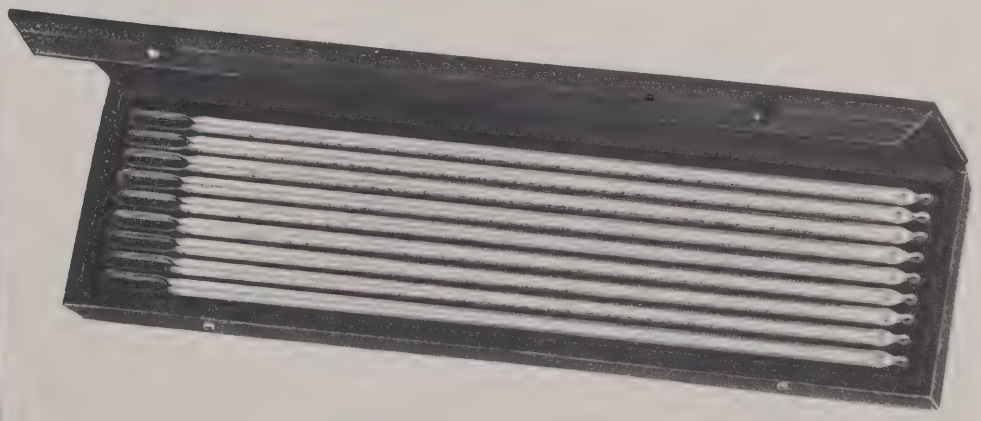

Each set includes special plush-lined case. Ranges, in Fahrenheit or Centigrade scales, are NEWLY CALIBRATED.

AT LEFT...one of the thermometers is shown, ACTUAL SIZE*. Notice LARGE DIAMETER OF STEM, which is made from special extra heavy glass tubing!

*Thermometer is actually 15" long. We've "telescoped" the stem in order to show you both the bulb and the ring ends.

maximum scale errors are stipulated for each thermometer throughout its entire range. Each of these TAG thermometers has been calibrated with a care and precision unsurpassed in the industry; the degree of accuracy is well within the permissible scale tolerances promulgated by the A.S.T.M. However, the TAG TEST ROOM CERTIFICATE FURNISHED FOR EACH THERMOMETER LISTS CORRECTIONS TO COMPENSATE FOR INDIVIDUAL SCALE CHARACTERISTICS. READINGS, THEREFORE, CAN BE CONSIDERED TO BE UNIMPEACHABLY ACCURATE. NO ONE TODAY MAKES FINER, MORE ACCURATE "MERCURY-IN-GLASS" THERMOMETERS THAN THESE!

There's more GOOD NEWS for next month, too. Watch for your TAG TALKS Number 4 with its description of another new TAG-WESTON Product!

Here is a brief idea of just what goes into each one of these complete TEST SETS-

1. NINE MATCHED THERMOMETERS. Ranges, in either Fahrenheit or Centigrade (Celsius), overlap. Expansion chambers give adequate over-range protection.

2. EACH THERMOMETER is calibrated to include an ice point.

3. EACH THERMOMETER is made from selected large-diameter Corning thermometer glass.

4. EACH THERMOMETER is annealed according to a special program annealing process - IT'S THE FINEST IN THE GLASS THERMOMETER INDUSTRY!

5. EACH THERMOMETER IS FURNISHED WITH A "TAG" TEST ROOM CERTIFICATE OF ACCURACY. (Obtained by calibration against thermometers certified by the U.S. Bureau of Standards.)

6. EACH THERMOMETER is subjected to exacting control over: size, shape of expansion and contraction chambers...diameter of bore...weight of fine-etched graduation markings... adherence to all U.S. Bureau of Standards requirements.

7. ALL THERMOMETERS are packed in a protective plush-lined case.

Pass this story along to the laboratories of schools, colleges, universities; business, industrial and scientific institutions. It's a story they'll welcome. Said one scientist, (physics lab major university) "...you are endeavouring to render a real service..."

SPECIFICATIONS

TAG Extreme Precision Grade, solid glass, engraved stem mercury thermometers, with TAG Test Room Accuracy Certificate:

Length - 15 inches
Immersion - Total
Stem Diameter - 7 to 8 mm.
Bulb Diameter - 6 to 7 mm.
Ice Point - Included
Top - Ring

Nine TAG A.S.T.M. Extreme Precision Thermometers:
No. 51334 CENTIGRADE, (Celsius) Set complete with case

No. 51344 FAHRENHEIT, Set complete with case

DELIVERY FROM STOCK, AFTER JULY 1, 1950!

Therm. No.	Range	Div.	Bulb Length	Expansion Chamber For Protection To	Specified Tolerance
51325	-38 to 2°C	.1	25 to 35 MM	52°C	± .1°C
51326	-2 to 32°C	.1	25 to 35 MM	82°C	± .1°C
51327	28 to 52°C	.1	25 to 35 MM	102°C	± .1°C
51328	48 to 77°C	.1	25 to 35 MM	127°C	± .1°C
51329	73 to 102°C	.1	25 to 35 MM	152°C	± .1°C
51330	98 to 155°C	.2	10 to 20 MM	180°C	± .2°C
51331	145 to 205°C	.2	10 to 20 MM	230°C	± .2°C
51332	195 to 305°C	.5	10 to 20 MM	330°C	± .5°C
51333	295 to 405°C	.5	10 to 20 MM	430°C	± .5°C
51335	-36 to +35°F	.2	25 to 35 MM	125°F	± .2°F
51336	25 to 85°F	.2	25 to 35 MM	175°F	± .2°F
51337	75 to 130°F	.2	25 to 35 MM	212°F	± .2°F
51338	120 to 175°F	.2	25 to 35 MM	265°F	± .2°F
51339	165 to 220°F	.2	25 to 35 MM	310°F	± .2°F
51340	210 to 310°F	.5	10 to 20 MM	400°F	± .5°F
51341	295 to 400°F	.5	10 to 20 MM	445°F	± .5°F
51342	385 to 580°F	1.0	10 to 20 MM	625°F	±1.0°F
51343	565 to 760°F	1.0	10 to 20 MM	805°F	±1.0°F

WESTON ELECTRICAL INSTRUMENT CORPORATION
MANUFACTURERS OF TAGLIABUE AND WESTON INSTRUMENTS
614 Frelinghuysen Avenue Newark 5, N. J.

Printed in U. S. A.

gap. The core is recessed at the center to accommodate the twin moving coil.

The operation of the assembled mechanism is dependent upon the balancing of two opposing torques resulting from the currents in the two windings. The torque, as in a direct current moving coil type instrument, is proportional to turns, current, and field strength. The current in one coil produces a torque opposing that of the second coil, both attempting to rotate into the weaker field. With one current larger than the other, the moving element will come to rest when the products of flux density and current balance for the two coils.

Application of the Ratio Mechanism

The desired range of a rotor temperature indicator is generally 0-150C. This means the basic ratio from bottom scale to top scale must equal the ratio of field resistance between these temperatures. Basing this on the known resistance at 25C gives the following ratio:

$$\frac{R_{t_1}}{R_{t_o}} = \frac{R_t[1+.00385\ (t_1-t)]}{R_t[1+.00385\ (t_o-t)]}$$

and

$$\frac{R_{150}}{R_o} = \frac{R_{25}[1+.00385\ (150-25)]}{R_{25}[1+.00385\ (0-25)]} = 1.64$$

By altering the eccentricity of the mechanism core in the pole pieces, the ratio meter can be adjusted for this exact ratio.

The two individual moving element coils are adjusted by means of series resistances to the nominal field voltage and to the millivolt drop of the field circuit ammeter shunt. This is shown in Figure 3. It is obvious that the 25C scale position must be based on the current and voltage with the 25C field resistance. End scale values of 0 and 150C will be correct by virtue of the over-all instrument ratio of 1.64, as previously explained. The voltage circuit series resistance consists of manganin wire, and the current circuit a combination of manganin and a negative temperature coefficient composition resistor to give comparable temperature coefficients to each circuit. The use of two isolated circuits eliminates the possibility of error that might occur if a common lead for the two circuits was used. Sensitivity may vary over a range of from about 5 to 15 milliamperes or more, depending upon the value of field voltage and current.

There are several practical considerations involved in specifying an instrument of this type and can be listed as follows:

1. Field Resistance. A value is generally supplied by the manufacturer or can be measured at a stabilized temperature by the voltmeter-ammeter method.
2. Brush Drop. The voltage drop in the brushes can be estimated by the manufacturer with sufficient accuracy based on the type of brush used. An assumption of two volts over the working range is usually satisfactory.
3. Ammeter Shunt Leads. It is sometimes necessary to run leads several hundred feet to the control room. A maximum lead allowance of 1.5 ohms is possible with the Model 918.
4. Ammeter Shunt. The shunt selection depends entirely upon the total possible variation in current. Generally a 100-millivolt drop shunt based on the maximum current is satisfactory.
5. Scale Range. A range of 0-150C is optimum for the ratio mechanism, and also adequately covers the temperature range of alternator rotors. Generators are rated for a maximum temperature rise of about 90C by the resistance method and with a cooling air temperature of 40C; this gives a maximum actual temperature of the order of 130C.

There is no question as to the desirability of rotor temperature measurements and this is reflected in the growing requirements for suitable devices in power plant specifications. While the more readily obtained stator or armature temperature serves as a guide to alternator heating, the knowledge of all factors affecting maximum permissible loading is desirable for best over-all power plant efficiency and utility. Varying duration of overloads, conditions of power factor, and ambient and coolant temperatures all have marked influences on both rotor and stator temperatures. In the power field, any additional safeguard against shutdown or damage to equipment is of vital importance. The use of indicating instruments to show the temperatures of both stator and rotor temperatures is a step in this direction.

E. N.—No. 81 —*L. W. Pignolet*

Reference: American Standard Association, Standard Rotating Machinery, C50-1943.

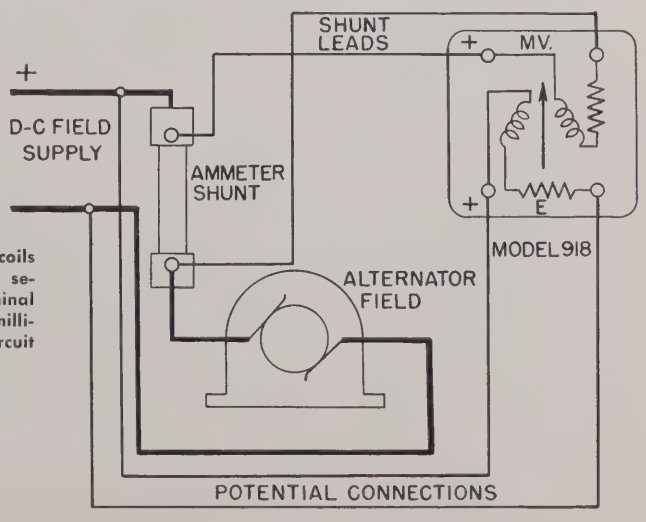

Figure 3—The two moving coils are adjusted by means of series resistances to the nominal field voltage and to the millivolt drop of the field circuit ammeter shunt.

THE USE OF WESTON TYPE 30 VOLUME LEVEL INDICATORS ON 150 OHM LINES

THE Weston Type 30 VU meter which has become so universally standard on broadcast systems of all kinds was originally designed for use on 600 ohm lines. Quite a number of 150 ohm lines are coming into use, however, and in most instances it is desirable to use a volume level indicator of some kind so that a study has been made of the possibility of using the VU meter as it now stands in such installations.

One arrangement which is now recommended is through the use of a transformer such as the General Radio Type 941A and as shown in the diagram below. The transformer may be used directly, with switches "T" closed, up to any level for which the transformer is suitable. Switch "S" may be open for a fully insulated system, or omitted entirely and this circuit closed if a grounded system is deemed satisfactory.

However, since any transformer has some power limitations, and since a 12 DB pad can be arranged to serve as a match between the line and load, the diagram shows an arrangement where the transformer is switched out of the circuit and a fixed pad switched in at the 12 DB or 16 VU point; the two line switches are transferred to "P," and switch "S" must be closed if left open previously. It is convenient to associate these transfer switches with the 12 DB position on the attenuator and it might be noted that it is possible to use the resistor elements for the first 11 steps over again for the higher steps shown in the tabulation of resistance values below. Connections to the Type 941A transformer are shown in the small diagram with reference to particular terminal numbers; these numbers should be used exactly as shown in order to maintain the high and low potential points.

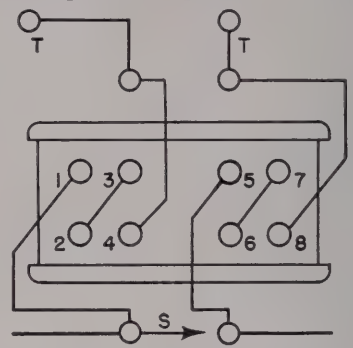

Any other type of attenuator, such as a balanced H, may be used with the matching transformer ahead of the attenuator throughout, or transferred to a fixed pad at the higher levels as may best suit the requirement of any particular level and circuit.

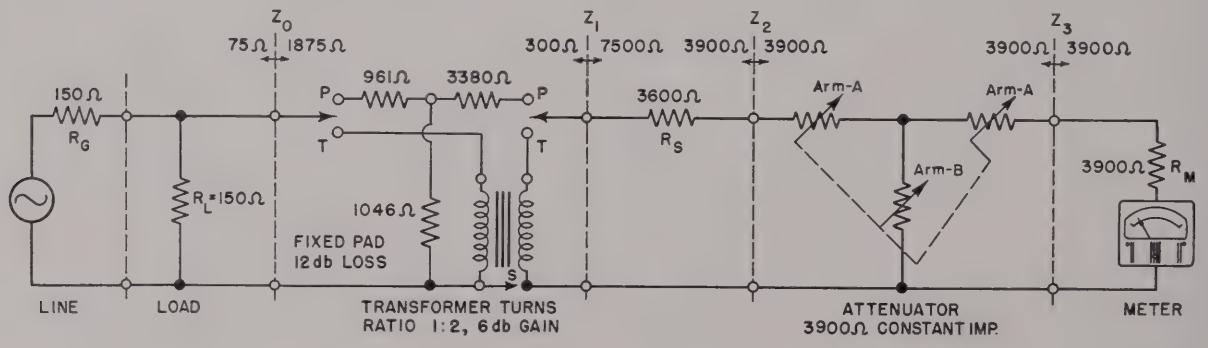

Attenuator Loss — DB	Level VU	Switch Position	Arm A Ohms	Arm B Ohms	Attenuator Loss — DB	Level VU	Switch Position	Arm A Ohms	Arm B Ohms
0	+4	T, T.	0	Open	15	+19	P, P.	666.9	11070
1	+5	T, T.	224.3	33801	16	+20	P, P.	882.5	8177
2	+6	T, T.	447.1	16788	17	+21	P, P.	1093	6415
3	+7	T, T.	666.9	11070	18	+22	P, P.	1296	5221
4	+8	T, T.	882.5	8177	19	+23	P, P.	1492	4352
5	+9	T, T.	1093	6415	20	+24	P, P.	1679	3690
6	+10	T, T.	1296	5221	21	+25	P, P.	1857	3166
7	+11	T, T.	1492	4352	22	+26	P, P.	2026	2741
8	+12	T, T.	1679	3690	23	+27	P, P.	2185	2388
9	+13	T, T.	1857	3166	24	+28	P, P.	2334	2091
10	+14	T, T.	2026	2741	25	+29	P, P.	2473	1838
11	+15	T, T.	2185	2388	26	+30	P, P.	2603	1621
12	+16	P, P.	0	Open	27	+31	P, P.	2722	1432
13	+17	P, P.	224.3	33801	28	+32	P, P.	2833	1268
14	+18	P, P.	447.1	16788					

Printed in U.S.A.

FILE: WESTERN

ENGINEERING ASSOCIATES

A Self-Balancing Direct-Current Bridge for Accurate Bolometric Power Measurements

Glenn F. Engen

OCT 1 1 1958 PM

Until recently, the most accurate microwave power measurements of the bolometric type have required the use of a manual d-c bridge. A self-balancing d-c bridge has been developed that preserves the inherent accuracy of the manual bridge, extends the dynamic range of operation, and greatly simplifies the operating procedure. A general description of the equipment and operating techniques is given, followed by a comprehensive survey of the sources of error accompanying the method and the accuracy achieved.

1. Introduction

A large amount of the research effort expended in the field of low level microwave power measurement in the past few years has been directed toward a determination of bolometer-mount efficiencies, or evaluation of the validity of the r-f–d-c substitution principle.[1,2,3,4] Until recently the only accessory instrument of sufficient accuracy to utilize the results of these investigations has been a manually operated d c Wheatstone bolometer bridge. The use of this device is, however, both tedious and time consuming; the dynamic range over which the desired accuracy is achieved is rather small, and the danger of barretter burnout due to a misstep on the part of the operator is ever present.

A self-balancing d-c bolometer bridge has been developed at the NBS Boulder Laboratories, which to a large measure relieves these problems, while preserving the accuracy and extending the dynamic range of operation. To date, the technique has been employed primarily with barretter-type elements, although on the basis of preliminary results, the technique should prove equally useful with thermistors.

2. Manual Bridge

One of the simplest forms of the manual bridge previously employed at the National Bureau of Standards is shown in figure 1. The r-f power [5] is given by

$$P_{rf}=\frac{r_0}{4}(i_1^2-i_2^2), \qquad (1)$$

where i_1 and i_2 are the total currents required to balance the bridge without and with r-f power present, respectively. A precision potentiometer-standard resistor combination is used to measure i_1 and i_2. If it is assumed that this measurement contains a random error of ± 0.005 percent, it can be shown that for a typical bolometer operating at 200 ohms and requiring 8.5 ma of bias ($i_1=17$ ma) the error in measuring P_{rf} may be as large as 0.02, 0.3, and 3 percent at the 10, 1, and 0.1 mw levels, respectively, if all other sources of error are neglected. The small difference between i_1 and i_2 at low levels accounts for the deterioration in accuracy. A variety of alternative techniques have been proposed and employed with some degree of success, but it is not within the scope of this paper to examine the manual technique in detail or to establish the maximum accuracy obtainable. In practice, this is often determined by the stability requirements imposed on the generator and measuring system by the time-consuming nature of the technique, rather than by more fundamental limitations.

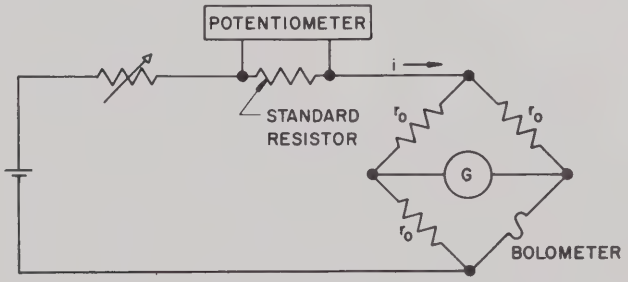

FIGURE 1. *Manual direct-current bolometer bridge.*

3. Self-Balancing Bridge

The self-balancing d-c bolometer bridge employs a d-c amplifier in a feedback loop to balance the bolometer bridge. The amplifier is connected in such a manner that the bridge unibalance signal is amplified to provide the bridge current (fig. 2). The use of this self-balancing circuit eliminates many of the time-consuming features of the technique, but the power-measurement problem is essentially the same. This problem, at low power levels, is basically one of trying to accurately measure a small change in a comparatively large d-c power.

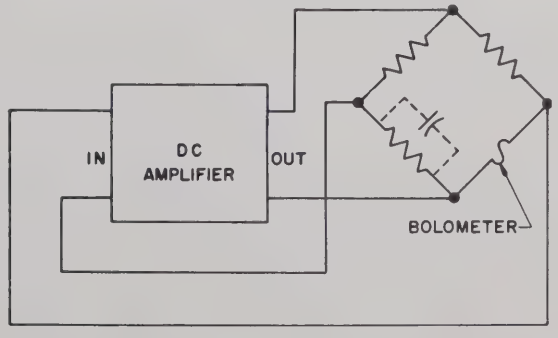

FIGURE 2. *Basic circuit of self-balancing bridge.*

[1] R. W. Beatty and Frank Reggia, An improved method of measuring efficiencies of ultra-high-frequency and microwave bolometer mounts, J. Research NBS **54**, 321 (1955) RP2594.
[2] A. C. Macpherson and D. M. Kerns, A microwave microcalorimeter, Rev. Sci. Instr. **26**, 27 (1955).
[3] H. J. Carlin and Max Sucher, Accuracy of bolometric power measurements, Proc. Inst. Radio Engrs. **40**, 1042 (Sept. 1952).
[4] D. M. Kerns, Determination of efficiency of microwave bolometer mounts from impedance data, J. Research NBS **42**, 579 (1949) RP1995.
[5] More correctly, "the retracted d-c power".

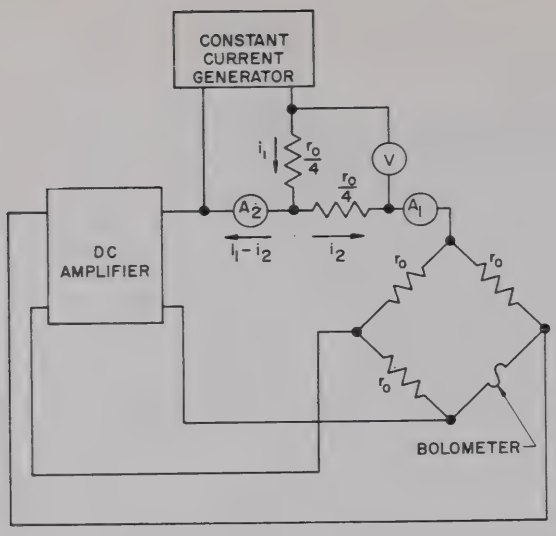

FIGURE 3. *Basic circuit for the determination of Δi and power.*

The formula for the r-f power may be rewritten

$$P_{rf}=\frac{r_0}{4}(i_1+i_2)(i_1-i_2) \tag{2}$$

$$=\frac{r_0}{4}(2i_1-\Delta i)\Delta i, \tag{3}$$

where $\Delta i=i_1-i_2$.

The difficult factor to measure accurately is Δi. A constant-current generator of high stability has been developed for use in conjunction with a differential current-measuring technique, which enables a direct and accurate determination of Δi. The circuit is illustrated in figure 3 and operates as follows: First, with no microwave power present in the bolometer, i_1 is determined by ammeter A_1, and the output of the constant-current generator is adjusted with the aid of ammeter A_2 to equal i_1 (ammeter A_2 reads zero). Then, with microwave power applied, A_2 will read Δi directly, and the power may be determined from eq (3). In practice, a potentiometer and standard resistor are employed in place of A_1 and A_2 to achieve high accuracy.

Alternatively, a voltmeter, V, connected as shown, will read $(r_0/4)(i_1+i_2)$, and the power is given by the product of V and A_2. These operations may also be combined in a single instrument of the dynamometer type to achieve a direct reading of the power.

The degree of success obtained with this technique is, of course, contingent upon the degree of stability achieved in the constant-current generator. In this case the change in generator output for a complete cutoff of bridge current is less than 1 part in 10^5, resulting in a negligible error from this source.

4. Performance

It is shown in a following section that the over-all accuracy in power measurement achieved, using a potentiometer to measure the current, is about 0.1 percent, whereas substitution of a suitable dynamometer to achieve direct reading is expected to yield an accuracy of about 0.3 percent. The instrument thus provides an increase in accuracy of 10 to 50 times that provided by the commercially avaiablel audiobridges. Other advantages over the tylpica audiobridge include: (1) Comparatively simple techniques are available for establishing, verifying, and monitoring the specified accuracy. (For example, the bridge balance may be monitored by a suitable galvanometer.) (2) The performance is, to a large degree, independent of the nominal deterioriation of the vacuum tubes and other electronic components. (3) The elimination of the audio bias power avoids its interaction with the pulse-repetition frequency in the measurement of pulse power.

At low power levels the r-f power is approximately proportional to Δi (eq 3), and the low-level performance may be displayed by recording this current with the r-f power alternately on and off. The system response to a 1-μw signal is given in figure 4.

Barring failure of the electronic components, the self-balancing operation eliminates the danger of bolometer burnout due to excessive bias current, whereas protection against an r-f overload may also

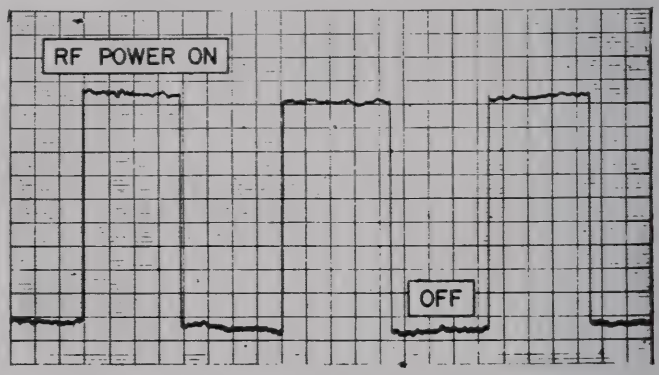

FIGURE 4. *Bridge response to a 1-microwatt signal.*
(Radiofrequency on and off for 1-minute intervals)

be provided through use of a suitable relay to turn off the r-f source when the power input to the bolometer exceeds a prescribed amount.

The d-c amplifier employed in this application is a commercially available instrument of exceptional gain, zero stability, and phase response, which was modified by the addition of a cathode follower to provide the required output current. The current amplification of the amplifier, as thus modified, is approximately 100,000. Compensation for the thermal lag of the bolometer is provided in the feedback loop by means of a condenser, as indicated in figure 2, but the achievement of stable operation with this large amplification is primarily a tribute to the amplifier phase response. The constant-current generator employs a second amplifier of the same type, which, with modification, maintains a constant-output current by reference against a mercury cell. A prototype model of this equipment is shown in figure 5.

5. Analysis of Errors

The practical problems involved in making an accurate determination of the power, using eq (1) to (3), have been noted. But use of these formulas implies that the bridge is exactly balanced, the bridge arms are equal to r_0, etc. It is shown in the appendix that a more complete expression for the power is

$$P_{rf}\cong\frac{r_0}{4}(i_{b1}^2-i_{b2}^2)\left[1+Z-\frac{r_l}{r_0}+\frac{2e}{r_0(i_{b1}+i_{b2})}\left(1+\frac{8}{\gamma i_{b1}i_{b2}}\right)\right.$$
$$\left.+\frac{16(1+g)}{\gamma i_{b2}(i_{b1}+i_{b2})}\left(\frac{1}{\alpha}-\frac{i_{g1}}{i_{b1}}\right)-\frac{2g}{(i_{b1}+i_{b2})}\left(\frac{i_{b1}}{\alpha}+i_{g2}\right)\right], \tag{4}$$

WESTON Instruments
DIVISION OF DAYSTROM, INCORPORATED
NEWARK 12, NEW JERSEY ■ BIGELOW 3-4700

October 9, 1958

Engineering Associates
434 Patterson Rd.
Dayton 9, Ohio

Subject: ENGEN MICROWAVE WATTMETER SYSTEM

You are perhaps familiar with the automatic microwave wattmeter recently developed by Mr. Glenn F. Engen of the Radio Standards Laboratory of the National Bureau of Standards, Boulder, Colorado. The attached copy of Research Paper No. 2776, which was issued by the National Bureau of Standards, describes this system.

Weston Instruments, Division of Daystrom, Inc. is currently producing a quantity of the Engen Microwave Wattmeter Systems which comprise the following items:

Model 1493 Bolometer Bridge

Model 1494 Reference Current Supply

We will be pleased to accept additional orders for these systems at the present time. By including them with this current production run, it is possible to offer them at a price of $5,230. Because of the circumstances, this offer is subject to acceptance within sixty days.

We solicit your interest in this equipment and will welcome an opportunity to answer technical questions or provide a more detailed quotation on request.

Emil G. Nichols

Emil G. Nichols
Product Line Sales Manager

EGN:ds

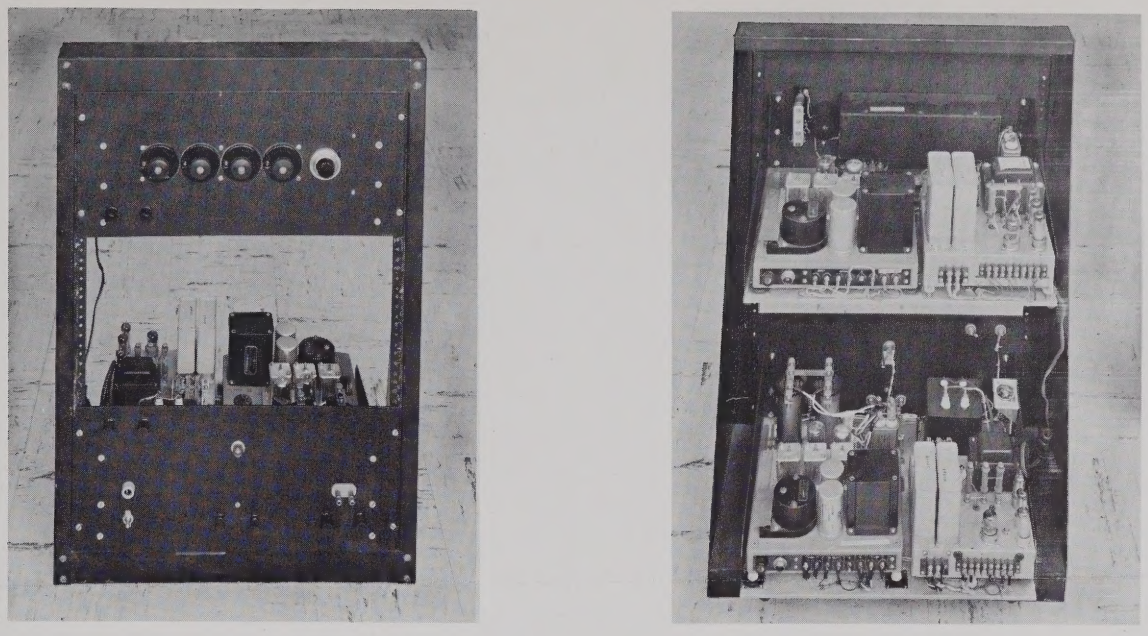

FIGURE 5. *Prototype model of self-balancing bridge, front and rear views.*

where

$\alpha=(i_{b1}-i_{b2})/(i_{g1}-i_{g2})$=current amplification of amplifier
Z=fractional deviation of the lower bridge arm from the value r_0
r_l=resistance of bolometer leads
e=thermal (or other) emf in amplifier input
i_b=total bridge current
i_g=amplifier input current
gr_0=amplifier input resistance
γ="ohms per watt" bolometer coefficient.

For a typical bolometer operating in the 0 to 10-mw region, the following values may be assigned:

$r_0=200$ ohms
$\gamma=4.5$ ohms/mw
$i_{b1}=17$ ma
$i_{b2}>8$ ma

Substituting these values in the above expression yields the result

$$P_{rf}\cong\frac{r_0}{4}(i_{b1}^2-i_{b2}^2)\left[1+Z-\frac{r_l}{r_0}+5.6e+18(1+g)\left(\frac{1}{\alpha}-\frac{i_{g1}}{i_{b1}}\right)-80g\left(\frac{i_{b1}}{\alpha}+i_{g2}\right)\right],$$

where the last three terms in the bracket reflect the inability of the d-c amplifier to balance the bridge exactly.

The characteristics of the d-c amplifier employed in this application are such that the following values obtain:

$g=1/4$ (amplifier input resistance 50 ohms)

$\alpha>10^5$ (current amplification)

$0<i_{g1}/i_{b1}<2\times10^{-5}$
$0<i_{g2}<10^{-7}$
$|e|<10^{-}$
} (amplifier zero stability).

Substituting these values in the last three terms gives a value for their sum of about 0.0002.

The bolometer lead resistance can be measured with little effort and the correction applied, so the error from this source is negligible, whereas the value of $|Z|$ can ordinarily be held to 0.0001 or less.

Finally, it is possible to measure current by means of a precision potentiometer-standard resistor combination to an accuracy of a few parts in 10^4; thus the first factor in eq (4) may be determined by the technique discussed earlier to an accuracy of about 0.06 percent.

In summary, the total limits of error are as follows:

Deviation of bridge arms from value r_0	0.01 percent.
Failure of bridge to be exactly balanced	.02 percent.
Measurement of $i_{b1}+i_{b2}$	.03 percent.
Measurement of $i_{b1}-i_{b2}$	.03 percent.
Bolometer lead resistance	.00 percent.
Amplifier noise and instability (experimentally observed)	0.1 μw.
Total	.09 percent+0.1 μw.

6. Appendix

From figure 6 the power may be expressed in the form

$$P_{rf}=\frac{r_0}{4}(i_{b1}^2-i_{b2}^2)+f(X,Y,Z,i_g,e,r_l) \qquad (5)$$

where X, Y, and Z are the deviations of each of the bridge arms from the value r_0, i_g and e are the detector current and thermal (or other) emf, respectively, and r_l the resistance of the bolometer leads.

Assuming a knowledge of the bolometer resistance law, an exact expression for the second term could be derived, but the labor required suggests the following approximate treatment. By hypothesis, the variables $X \ldots r_l$ and $f(X \ldots r_l)$ are small, and $f(X \ldots r_l)$ may, to a good approximation, be written as the sum of the first-order corrections for each of these quantities, where the correction for each of the variables is determined with the other variables

equal to zero.

Application of this technique to the circuit in figure 6 yields the following first-order expressions for the d-c power dissipated in the bolometer, and the bolometer resistance

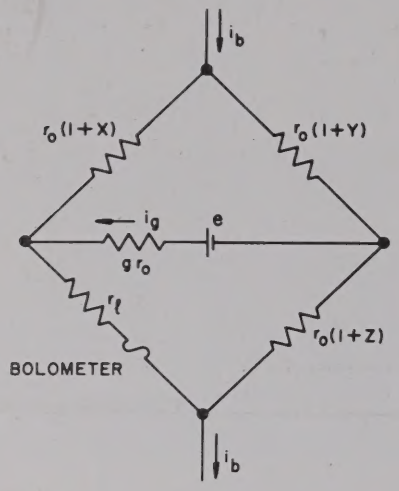

FIGURE 6. *Bridge circuit used in the evaluation of errors.*

$$P_{dc} \cong \frac{i_b^2 r_0}{4}\left[1+Z-\frac{r_l}{r_0}+\frac{2e}{r_0 i_b}-\frac{2g i_g}{i_b}\right], \tag{6}$$

$$r \cong r_0\left[1+x-y+Z-\frac{r_l}{r_0}+\frac{4e}{i_b r_o}-\frac{4(1+g)i_g}{i_b}\right]. \tag{7}$$

The failure of the expression for power to have a first-order dependence on X or Y is explained as follows: A prescribed, small value for X or Y will cause a first-order variation in bolometer resistance r, as indicated in eq (7), but also produces an unequal division of current in the two sides of the bridge. These two sources of error cancel to a first approximation. The only general requirement on the upper bridge arms is that they be equal, and if they have a nominal value of r_0, it can be shown that they may differ from each other by as much as 2 percent and produce an error in the power measurement of only 0.01 percent.

At a constant ambient temperature and assuming equivalence of d-c and r-f heating,[6] the power, P, dissipated in the bolometer will be a function of its resistance, r:

$$P=f(r).$$

Because the bolometer is nearly a square-law detector, one may in the neighborhood of an arbitrarily selected operating resistance r_0, write

$$P \cong P_0+\frac{\partial P}{\partial r}(r-r_0),$$

where P_0 is the power required to bring the bolometer to the resistance r_0 at the given ambient temperature, P is the sum of the d-c and r-f power, $P=P_{dc}+P_{rf}$, and $\partial P/\partial r$ is the reciprocial of the "ohms-per-watt" bolometer coefficient, i. e., $(\partial P/\partial r)=(1/\gamma)$. Then

$$P_{dc}+P_{rf} \cong P_0+\frac{1}{\gamma}(r-r_0).$$

P_0 may be determined by measurements in the absence of r-f power:

$$P_0 \cong P_{dc}-\frac{1}{\gamma}(r_1-r_0),$$

where the subscript 1 has been used to indicate the value of quantities measured in the absence of r-f power, whereas the subscript 2 will indicate values with r-f present.

The formula for r-f power is then

$$P_{rf}=P_0-P_{dc}+\frac{1}{\gamma}(r_2-r_0)=P_{dc1}-P_{dc2}-\frac{1}{\gamma}(r_1-r_2). \tag{8}$$

In the given application, only i_g of the variables $X \ldots r_l$ has a functional dependence upon i_b, or is subject to change with the application of r-f power. Substituting eq (6) and (7) in eq (8) gives the desired result

$$P_{rf} \cong \frac{r_0}{4}(i_{b1}^2-i_{b2}^2)\left[1+Z-\frac{r_l}{r_0}+\frac{2e}{r_0(i_{b1}+i_{b2})}\left(1+\frac{8}{\gamma i_{b1} i_{b2}}\right)+\frac{16(1+g)}{\gamma i_{b2}(i_{b1}+i_{b2})}\left(\frac{1}{\alpha}-\frac{i_{g1}}{i_{b1}}\right)-\frac{2g}{(i_{b1}+i_{b2})}\left(\frac{i_{b1}}{\alpha}+i_{g2}\right)\right],$$

where

$$\alpha=\frac{i_{b1}-i_{b2}}{i_{g1}-i_{g2}}.$$

The author extends his thanks to R. W. Beatty and John E. Lauer for their valuable criticisms and suggestions in the preparation of this paper, and to Ray R. Rumfelt for his assistance in the design and construction of this equipment.

BOULDER, COLO., November 28, 1956.

[6] The r-f–d-c substitution error is assumed to be negligible in this discussion. For a treatment of this problem, see footnotes 2 and 3.

Reprint from

Journal of Research of the National Bureau of Standards

Vol. 59, No. 2, August 1957

WESTON INSTRUMENTS

DIVISION OF DAYSTROM, INCORPORATED

Z-30 10/58

NEWARK 12, N. J., U.S.A.

STYERS BOOKBINDING CO.
NEWARK 8, N. J.